PROGRAMMING MANUAL

Applicable Model

SL-150, 150MC, 150Y
SL-150S, 150SMC, 150SY
SL-200, 200MC
SL-200S, 200SMC
SL-250, 250MC
SL-250S, 250SMC
SL-303, 303MC, 303Y
SL-400, 400MC
SL-600, 600MC
SL-25E
SL-65, 65MC
SL-75, 75MC
TL-40, 40MC, 40Y
VL-25
VL-55, 55MC
LL-7, 8
CL1500, 1500T
CL2000, 2000T

Applicable NC Unit

MSC-500	**MSD-501**
MSC-501	**MSD-518**
MSC-518	**MSD-501II**
MSG-501	**MSD-518II**

Before starting operation, maintenance, or programming, carefully read the manuals supplied by Mori Seiki, the NC unit manufacturer, and equipment manufacturers so that you fully understand the information they contain.

Keep the manuals carefully so that they will not be lost.

MORI SEIKI
THE MACHINE TOOL COMPANY

PM-NLTMSC518-I1EN

- The contents of this manual are subject to change without notice due to improvements to the machine or in order to improve the manual. Consequently, please bear in mind that there may be slight discrepancies between the contents of the manual and the actual machine. Changes to the instruction manual are made in revised editions which are distinguished from each other by updating the instruction manual number.
- Should you discover any discrepancies between the contents of the manual and the actual machine, or if any part of the manual is unclear, please contact Mori Seiki and clarify these points before using the machine. Mori Seiki will not be liable for any damages occurring as a direct or indirect consequence of using the machine without clarifying these points.
- All rights reserved: reproduction of this instruction manual in any form, in whole or in part, is not permitted without the written consent of Mori Seiki.

The product shipped to you (the machine and accessory equipment) has been manufactured in accordance with the laws and standards that prevail in the relevant country or region. Consequently it cannot be exported, sold, or relocated, to a destination in a country with different laws or standards.

The export of this product is subject to an authorization from the government of the exporting country.

Check with the government agency for authorization.

Copyright © 2008 MORI SEIKI CO., LTD. All rights reserved.

CONTENTS

SIGNAL WORD DEFINITION

FOR SAFE OPERATION

FOREWORD

BEFORE READING THIS PROGRAMMING MANUAL

A : BEFORE PROGRAMMING

B : G FUNCTIONS

C : M FUNCTIONS

D : T, S, AND F FUNCTIONS

E : AUTOMATIC TOOL NOSE RADIUS OFFSET

F : MANUAL TOOL NOSE RADIUS OFFSET

G : CUTTER RADIUS OFFSET

H : MULTIPLE REPETITIVE CYCLES

I : HOLE MACHINING CANNED CYCLE

J : TOOL LIFE MANAGEMENT B FUNCTION (OPTION)

K : EXAMPLE PROGRAMS

APPENDIX

INDEX

SIGNAL WORD DEFINITION

A variety of symbols are used to indicate different types of warning information and advice.

Learn the meanings of these symbols and carefully read the explanation to ensure safe operation while using this manual.

<Symbols related with warning>

The warning information is classified into three categories, DANGER, WARNING, and CAUTION.

The following symbols are used to indicate the level of danger.

Indicates an imminently hazardous situation which, if not avoided, will result in death or serious injury.

The information described in the DANGER frame must be strictly observed.

Indicates a potentially hazardous situation which, if not avoided, could result in death or serious injury.

The information described in the WARNING frame must be strictly observed.

Indicates a potentially hazardous situation which, if not avoided, may result in minor or moderate injury damages to the machine.

The information described following the caution symbol must be strictly observed.

<Other symbols>

The format identified by this symbol gives information for programming.

Indicates the items that must be taken into consideration.

Indicates useful guidance relating to operations.

Indicates the page number or manual to be referred to.

The number in ( ) indicates the section number.

Indicates the procedure used for displaying the required screen.

Indicates the example of operations.

FOR SAFE OPERATION

This machine is intended for use by persons who have a basic knowledge of machine tools, including cutting theory, tooling and fixtures. Mori Seiki cannot accept responsibility for accidents that occur as a result of operation or maintenance of the machine by personnel who lack this basic knowledge or sufficient training.

Workpiece materials and shapes vary widely among machine users. Mori Seiki cannot predict the chucking pressure, spindle speed, feedrate, depth of cut, etc., that will be required in each case and it is therefore the user's responsibility to determine the appropriate settings.

Each machine is shipped with a variety of built-in safety devices. However, careless handling of the machine can cause serious accidents. To prevent the occurrence of such accidents, all programmers and other personnel that deal with the machine must carefully read the manuals supplied by Mori Seiki, the NC unit manufacturer, and equipment manufacturers, before attempting to operate, maintain, or program the machine.

Because there are so many "things that cannot be done" and "things that must not be done" when using the machine, it is impossible to cover all of them in the Instruction Manual. Assume that something is impossible unless the manual specifically states that it can be done.

The following manuals are supplied with your NC lathe:

I. Safety Guidelines prepared by Mori Seiki

II. Instruction Manual prepared by Mori Seiki

- MAINTENANCE MANUAL
- OPERATION MANUAL
- PROGRAMMING MANUAL

III. NC unit Operation and Maintenance Manuals prepared by the NC unit manufacturer

IV. Instruction Manuals prepared by equipment manufacturers

In addition to these manuals, ladder diagrams, parameter tables and electrical circuit diagrams are also supplied with the machine to help with electrical maintenance. The ladder diagrams are provided in the document box, parameter tables and electrical circuit diagrams are stored in the document compartment inside the electrical cabinet. Please make use of these materials when carrying out maintenance work.

Fundamental safety information is presented in the following pages.

All cautions on operation must be strictly observed when operating the machine, carrying out maintenance work, or writing programs. Failure to observe fundamental safety information can cause accidents in which the operator or other personnel working near the machine are seriously injured, or the machine is damaged. All personnel that deal with the machine must carefully read and thoroughly understand the information in the following pages before attempting programming or operating the machine.

The vocabulary and terms used for machine parts and operations in the warnings, cautions and notes are defined or explained in the manual texts and illustrations.

If you are unsure of the meaning of any word or expression, please refer to the corresponding textual explanation or illustration. If you still cannot understand or are unsure of the meaning, contact Mori Seiki for clarification.

"Operator", as used in these cautions, means not only the operator who operates or supervises a machine tool to perform machining, but also any person, including maintenance personnel who maintain and inspect a machine tool or safety device or safety measures provided with it, and the programmers who create programs used for machining, who are engaged in operations which deal with a machine tool.

Therefore, all persons engaged in these operations must carefully read these cautions and related materials, and thoroughly understand the contents before attempting to operate the machine.

1 CONSIDERATIONS BEFORE OPERATING THE MACHINE

The cautions that must constantly be born in mind when operating the machine are listed below.

Listed below are important cautions that apply to all machine-related work (machine operation, maintenance, inspection, programming, etc.).

1. ***Never touch a switch, button, or key with wet hands.***

   If it is not properly grounded or is leaking current, you could receive an electric shock.

2. ***Before starting machine operation, check that there is nobody inside the protective cover or close to rotating or moving parts of the machine. Never touch or stand near the rotating or moving parts of the machine while it is operating; you could be seriously injured by being entangled in the rotating parts or crushed by the moving parts.***

3. ***Never operate the machine with the protective cover removed or while interlocks or other safety devices are ineffective, since the machine could operate in an unexpected manner, causing accidents involving serious injuries.***

   Contact Mori Seiki, the NC unit manufacturer or relevant equipment manufacturers immediately if the protective cover or safety devices are damaged.

4. ***Always lock out the power to the machine before carrying out work inside the machine – such as setup work or cleaning the inside of the machine – and before carrying out inspections, repairs, or maintenance work. In addition, set the main switch to the OFF position and lock it, and place "PERSONNEL INSIDE MACHINE" or "UNDER MAINTENANCE" signs around the machine to stop anyone from switching on the power or operating the machine while the work is in progress. If work inside the machine or inspection or maintenance work is carried out with the power switched on, machine elements could be moved, and the personnel carrying out the work could be seriously injured by being entangled in the rotating parts or crushed by the moving parts of the machine.***

5. ***Always switch off the power before carrying out inspection or maintenance work in the electrical cabinet or on motors and transformers. If work has to be done while the power is switched on, it must be carried out by a qualified electrical engineer, taking the proper precautions; there is a danger of electric shock.***

6. ***Cover power supply cables that are run along the floor with rigid insulated plates to prevent them from being damaged. Damage to the insulation of the power supply cable could cause electric shocks.***

7. ***Even after the power is turned off, some devices will remain charged and the temperature of motors, lights inside the machine, etc., will remain high. Make sure that the charge has been discharged or the temperature has fallen before carrying out maintenance work or inspections on these devices. If you touch these devices/units carelessly while they are still charged or while the temperature is still high you could receive an electric shock or be burned.***
8. ***Check that all cables are properly insulated before using the machine. There is considerable danger of electric shock if damaged cables are used.***

1. **Keep the floor area around the machine tidy and clean; do not leave things lying on it, and clean up spilled water or oil immediately. If you fail to do this, plant personnel may injure themselves by tripping over or slipping on the floor.**
2. **Before operating the machine, check the area where you will have to stand and walk to make sure you can operate the machine safely. If you do not check your footing beforehand, you could loose your balance while working and injure yourself by putting your hands in a dangerous place while trying to find support, or by falling over.**
3. **Before using a switch, button, or key, check visually that it is the one you intend to use, and then press or set it decisively. Pressing the wrong switch, button, or key by mistake can cause accidents involving serious injuries or damage to the machine.**
4. **Keep the doors closed during machine operation. Leaving the machine running or operating it with doors open could cause accidents involving serious injuries or damage to the machine; plant personnel could be seriously injured by being entangled in the rotating parts of the machine, crushed by its moving parts, struck by broken tools, workpieces or jaws flying out of the machine, hit by flying chips, or splashed with coolant.**
5. **The parameters are set on shipment in accordance with the machine specifications; do not change them without first consulting Mori Seiki. If the parameters are changed without consultation, the machine may operate in an unexpected manner, causing accidents involving serious injuries or damage to the machine.**

6. **The machine specifications are set before shipping so that the machine can deliver its full performance. If the specifications and/or settings have to be changed or the machine has to be modified to meet new machining requirements or due to changes in the operating conditions, consult Mori Seiki. Changing the settings without consultation may lead to accidents involving serious injuries, impaired machine performance, and considerable shortening of the machine service life.**
7. **Before operating or programming the machine, or performing maintenance work, carefully read the instruction manuals provided by Mori Seiki, the NC unit manufacturer and the equipment manufacturers so that you fully understand the information they contain. Keep these instruction manuals safely so that you do not lose them. If you do lose an instruction manual, contact Mori Seiki, the NC unit manufacturer, or the relevant equipment manufacturer. If you attempt to operate the machine without having carefully read the instruction manuals first, you will perform dangerous and erroneous operations which may cause accidents involving serious injuries or damage to the machine.**
8. **Always observe the instructions in the caution labels stuck to the machine. Carefully read the Safety Guidelines supplied with the machine so that you fully understand them. If the writing on the labels becomes illegible, or if the labels are damaged or peel off, contact Mori Seiki. Also contact Mori Seiki if you cannot understand any of the labels. If you operate the machine without observing the instructions on the labels, or without understanding them properly, you will perform dangerous and erroneous operations which may cause accidents involving serious injuries or damage to the machine.**
9. **Never operate, maintain, or program the machine while under the influence of alcohol or drugs. Your concentration will be impaired, you may loose your balance and fall against dangerous parts of the machine, and you may operate the machine incorrectly, causing accidents involving serious injuries or damage to the machine.**
10. **Machine operators and authorized personnel working inside the plant and in the vicinity of the machine must put their clothing and hair in order so that there is no danger they will be entangled in the machine. If you have uncontrolled long hair or loose clothing and it gets caught in the machine, you will be seriously injured by being entangled in the rotating parts of the machine or crushed by its moving parts. Always wear safety shoes, eye protectors and a helmet.**

11. The machine is equipped with interlock functions such as the door interlock, chuck interlock, tailstock spindle interlock (applies only to machines equipped with a tailstock) and electrical cabinet door interlock to ensure the operator's safety. All the interlock functions must be ON when operating the machine. If you have to operate the machine with the interlocks released, you must recognize that there are many hazards involved and pay particular attention to safety while operating the machine in this condition. After finishing the necessary work, you must switch the interlocks back ON.

If the machine is operated with the interlocks released, it may operate in an unexpected manner, causing accidents involving serious injuries or damage to the machine.

12. The door interlock function serves only to protect the machine operator from accidents that can be prevented by inhibiting manual and automatic operation of the spindle, axis movement, and all other operations in automatic operation when the door is opened and while it is open; it will not afford protection against other hazards.

For example, each machine user will machine a variety of workpiece types and use a variety of workpiece holding fixtures, cutting tools, and cutting conditions; you are still responsible for ensuring safety with regard to the hazards that can arise from these user-specific conditions.

13. If the door interlock function is released, the machine is able to operate with some limitations while the door is open, exposing you to danger. In daily production operation, the door interlock function must be set "valid" and the key operating the switch must be removed from the switch and kept safely.

When shaping soft jaws, measuring the tool offset data, program check, test cutting or carrying out other setup work, it may be necessary to release the door interlock function. If you have to carry out work while the interlock function is released, you must recognize that there are many hazards involved and pay particular attention to safety. While the door interlock function is released, the warning lamp blinks in red and the warning buzzer beeps intermittently. You must recognize that the door interlock function is in the released state when the warning lamp is blinking in red and the warning buzzer is beeping intermittently. After finishing the necessary work, you must switch the interlock function back valid.

14. Before operating the machine, memorize the locations of the emergency stop buttons so that you can press one immediately from any location and at any time while operating the machine. The emergency stop buttons are used to stop all operations in the event of an emergency. If there is an obstacle in front of an emergency stop button it will not be possible to press it immediately when an emergency occurs and this could cause accidents involving serious injuries or damage to the machine.

15. Always switch the tailstock spindle interlock function ON before carrying out center-work operations. If this function is OFF, it will be possible to start automatic operation when the tailstock spindle is extended, even though it may not support the workpiece correctly. If automatic operation is started in this condition, the workpiece will fly out, causing serious injuries or damage to the machine. (Applies only to machines equipped with a tailstock.)

16. Adjust the position of the tailstock body so that the workpiece is securely held by the tailstock spindle center when the tailstock spindle is extended.

After making this adjustment, clamp the tailstock body to the bed. If the tailstock body is not clamped to the bed, or if the position of the tailstock body is incorrectly adjusted, it will be possible to start automatic operation when the tailstock spindle is extended, even if the workpiece is not supported by the tailstock spindle center. If machining is carried out while the workpiece is not supported by the tailstock spindle center, the workpiece will fly out, causing serious injuries or damage to the machine. (Applies only to machines equipped with a tailstock.)

17. To prevent hazardous situations, the plant or equipment supervisor must bar entry to the plant or the vicinity of the machine to anyone with insufficient safety training. Allowing persons without sufficient safety training unhindered into the plant and the vicinity of the machine could cause accidents involving serious injuries.

18. Because of the inertia of the moving parts of the machine, they may not be stopped immediately when the emergency stop button is pressed. Always confirm that all operations have stopped before going near these parts. If you approach the moving parts of the machine without due care you may be entangled in them and seriously injured.

WARNING

19. Do not leave articles such as tools and rags inside the machine. If the machine is operated with such articles inside it they may become entangled with a tool and thrown out of the machine, and this could cause accidents involving serious injuries or damage to the machine.

20. When the machine is running, operating noise may possibly be produced, depending on the cutting conditions and other factors.

When an operator works near the machine, either change cutting conditions to limit generation of noises or the operator must wear protective gear, meeting the level of generated noise, which will not cause inconvenience for performing intended work. Working under noises might impair operator's health, such as hearing.

21. This is not the explosion-proof specification machine. Dangers such as the ejection of a large workpiece or harmful dust or an explosion caused by the machining of metals such as magnesium are not preventable even if the door is closed. Do not rely on door and protective devices alone. Recognition of the dangers involved in machining procedures is required at all times.

22. This machine is equipped with a read-ahead function for the running program, and retains the read-ahead program commands stored in the NC memory during a temporary stop of automatic operation in order to eliminate latency time when restarting. Therefore, check the program commands or present positions of the axes when stopping the machine temporarily. In cases such as when discontinuing the machining, press the RESET (RESET) key to clear the program commands stored in the NC if necessary. Changing the program start position after a temporary stop in particular may cause accidents after the machining is restarted since the program commands stored in the NC are activated. Pay extra attention to the difference in the specifications in relation to other manufacturers' machines because the read-ahead program data may be cleared at temporary stops on these machines.

CAUTION

1. User programs stored in the memory, parameters set before shipping, and the offset data input by the user, can be destroyed or lost due to incorrect operation or other causes. To protect data against destruction and loss, back it up using an external I/O device (option), or other device.

   If you fail to make backup files, Mori Seiki cannot accept responsibility for any problem resulting from destroyed programs or lost parameter data and/or offset data.

   Keep the parameter table supplied with the machine in a safe place. Note that if the data is destroyed it will take some time to set the parameters again.

2. Never touch chips or the cutting edges of tools with your bare hands since you may be injured.

3. Take care not to stumble over the footswitch since you may be injured.
4. If it becomes necessary to perform a memory clear operation, contact Mori Seiki first. If a memory clear operation is performed without due care, the entire memory contents may be deleted, making the machine inoperable.
5. The machine operator must have normal sensory perception. If a person who has an abnormality affecting any sense operates the machine, he/she will not be able to accurately confirm the machine status and surrounding conditions by eye/ear/touch. Sensory confirmation is extremely important when operating the machine and an inability to make such confirmations properly could cause accidents involving serious injuries or damage to the machine.
6. Ensure that the workplace is adequately lit. If there is insufficient light, the operator may trip over something or be unable to perform or check work accurately, and this could cause accidents involving serious injuries or damage to the machine.
7. Remove any obstacles around the machine.

   Secure adequate space around the machine for working and adequate passageway, considering both ease of operation and safety. If there are any obstacles or if there is insufficient space or passageway, the operator may trip and fall or be unable to work properly, and this could cause accidents involving serious injuries or damage to the machine.
8. Stack products (workpieces) stably. If they are not stacked stably they may fall and injure the machine operator. Unstable stacking may also damage the products (workpieces), causing defects.
9. Keep the area around the machine clean; remove chips and foreign matter near the machine. If left, chips and foreign matter may cause plant personnel to fall and injure themselves.
10. Use a working bench strong and stable enough to support the weight of the workpieces and tools. If an unstable working bench is used the workpieces and tools could fall off and injure the machine operator.

If a machine alarm or NC alarm occurs, check its meaning by referring to the alarm list in the instruction manual or ladder diagram, and take the appropriate action. If this is ineffective, consult Mori Seiki or the NC unit manufacturer and take action only when you understand clearly what to do.

2 SAFETY PRACTICES DURING PROGRAMMING

The safety practices that the programmer must observe while programming are presented below. Read them before attempting programming.

Workpiece shapes and materials vary widely among machine users and, since the workpiece holding fixtures, cutting tools, cutting methods, and machining conditions will also vary accordingly, Mori Seiki cannot predict what factors will apply in individual cases. It is the machine user's responsibility to take these factors into account when creating a program. It is also the machine user's responsibility to ensure safety with respect to the hazards that may arise due to these user-dependent factors.

1. **Specify a spindle speed limit that is lower than the lowest of the individual allowable speed limits for the chuck, fixture, and cylinder. If you do not follow this instruction, the workpiece could fly out of the machine, causing serious injuries or damage to the machine.**
2. **Clamp workpieces and cutting tools securely. Determine the depth of cut and cutting feedrate for test cutting with safe operation as the first priority; do not give priority to productivity when making these determinations. If you fail to observe this warning, the tool or workpiece could fly out of the machine, causing serious injuries or damage to the machine.**
3. **Always select the most appropriate cutting tool and holder for the material and shape of the workpiece to be machined and cutting method, and check that the workpiece can be machined without any problems.**

   If an inappropriate cutting tool or holder is selected, the workpiece could fly out of the chuck during machining, causing serious injuries or damage to the machine. Machining accuracy will also be adversely affected.
4. **Before starting spindle rotation, check that the workpiece is securely clamped. Or, if performing center-work, check that the tailstock spindle center securely supports the workpiece. (Applies only to machines equipped with a tailstock.)**

   If the workpiece is not securely clamped or supported, it will fly out when the spindle is rotated, causing serious injuries or damage to the machine.
5. **Do not insert bar stock into the spindle while the spindle is rotating or you will be entangled in the machine. The length of the bar stock must be shorter than the spindle length unless a bar feeder is used. If the bar stock protrudes from the spindle it will increase spindle runout, and could bend, causing accidents involving serious injuries or damage to the machine.**

WARNING

6. **For the machine with the flat type operation panel, always place the operation selection key-switch in the "operation enable" or "operation disable" position after completing program entry. Be aware that the program will be updated if program editing operations are carried out with the operation selection key-switch at the "operation and edit enable" position. If the program is executed after being accidentally updated in this way the machine could operate unexpectedly, causing serious injuries or damage to the machine.**
7. **For the machine with the discrete type operation panel, always place the edit enable key-switch in the "edit disable" position after completing program entry. Be aware that the program will be updated if program editing operations are carried out with the edit enable key-switch at the "edit enable" position. If the program is executed after being accidentally updated in this way the machine could operate unexpectedly, causing serious injuries or damage to the machine.**
8. **For the machine with the touch panel, always return the WRITE PROTECT switch (PROGRAM) back to ON after completing program entry. Be aware that the program will be updated if program editing operations are carried out with the WRITE PROTECT switch (PROGRAM) set OFF. If the program is executed after being accidentally updated in this way, the machine could operate unexpectedly, causing serious injuries or damage to the machine.**
9. **Select the appropriate chucking pressure and tailstock spindle thrust force (applies only to machines equipped with a tailstock) for the workpiece shape and material, and the cutting conditions. If you cannot determine the appropriate chucking pressure, contact the chuck manufacturer or cylinder manufacturer. If you cannot determine the appropriate spindle thrust force (applies only to machines equipped with a tailstock), contact Mori Seiki. If the chucking pressure or spindle thrust force (applies only to machines equipped with a tailstock) is not set appropriately in accordance with the shape and material of the workpiece being machined and the cutting conditions, the workpiece could fly out during machining, causing serious injuries or damage to the machine. Incorrect setting could also distort the workpiece.**

10. Give full consideration to the type of chuck and cylinder used when setting the chucking pressure. Even if the same hydraulic pressure is applied to the chuck, the chuck gripping force will vary according to the manufacturer and type of chuck and cylinder.

For details on the chuck gripping force, consult the chuck and cylinder manufacturers.

If the chuck gripping force is different from that intended, the workpiece could fly out when the spindle is started, causing serious injuries or damage to the machine.

11. Workpiece materials and shapes vary widely among machine users. Mori Seiki cannot predict the workpiece clamping method, spindle speed, feedrate, depth of cut, and width of cut, etc., that will be required in each case and it is therefore the user's responsibility to determine the appropriate settings.

Note also that the machining conditions determined in automatic programming are the standard conditions, which are not necessarily the most suitable for the user's purposes and may have to be changed in accordance with the workpiece, chuck, etc. The conditions determined in automatic programming are for reference only and the final responsibility for determining the conditions rests with the user. (Conversational NC specification)

If you have difficulty determining these conditions, consult the chuck and cylinder manufacturers and tool manufacturer. Machining under inappropriate machining conditions can cause the workpiece to fly out of the chuck during machining, causing serious injuries or damage to the machine. It will also adversely affect machining accuracy.

12. While the machine is temporarily stopped during machining –for example when checking a program, performing test cutting, or cleaning chips out of the machine – do not feed the axes or index the turret head in manual operation. Or, if it is absolutely necessary to do so, be sure to return the axes and turret to their original positions before restarting the program. If machining is restarted without returning them to their original positions, the turret will move in unexpected directions, causing collisions between the cutting tools, holders, or turret head and the workpiece, chuck, or tailstock (if featured), which could cause serious operator injuries or damage the machine. The workpiece could also be machined with the wrong tool, and the cutting tool could be damaged.

13. If the program is input to the NC memory not by the programmer but by a machine operator, the operator may misread the numerical values and input incorrect values. This could cause accidents involving serious injuries or damage to the machine: the workpiece could fly out of the chuck during machining, and the cutting tool, holder, or turret head, could interfere with the workpiece, chuck, fixture, or tailstock (if featured). It could also cause the workpiece being machined with the wrong tool, or cause damage to the cutting tool.

14. If you forget to enter a decimal point in a program entry that requires one and start the machine without noticing the error, the turret may move to an unexpected position, causing, causing accidents involving serious injuries or damage to the machine. Check that you have entered decimal points where necessary.

15. Do not change the spindle gear range while a cutting load is applied. The workpiece could fly out of the chuck, causing serious injuries or damage to the machine and the cutting tool. In addition, excessive loads will be applied to the machine motors and machine elements, shortening their service lives. (Applies only to machines equipped with a transmission.)

16. Before starting the spindle, carefully check the workpiece gripping conditions and the machining conditions, including the chucking pressure, spindle speed, cutting feedrate, and depth of cut. If you start the spindle without adequate checking, the workpiece could fly out of the chuck, causing serious injuries or damage to the machine.

17. The chuck gripping force may be reduced due to a malfunction of the chuck or cylinder or a centrifugal force during high-speed spindle rotation. If machining is performed without securing a sufficient gripping force, the workpiece may fly out, causing serious injuries or damage to the machine.

If the chuck gripping force is reduced due to deterioration over time or damage from an accident or inadequate maintenance, contact Mori Seiki Service Department.

To prevent the chuck gripping force from lowering, clean and grease the chuck at regular intervals.

If the gripping force is reduced due to the centrifugal force applied to the jaws during high-speed spindle rotation, readjust the cutting conditions such as chucking pressure, cutting feedrate or cutting amount. Refer to the manuals prepared by the chuck manufacturer and the cylinder manufacturer.

1. Contact Mori Seiki when cutting cast iron, ceramics, or other materials which generate powder-type chips in dry cutting. If chips are not dealt with in an appropriate manner for the workpiece material, they can cause machine faults.
2. Before starting mass production, always check the program and perform test cutting in the single block mode. If you fail to do this the workpiece could collide with the cutting tool during machining, causing damage to the machine. Machining defects could also be caused.
3. When shifting the coordinate system in order to check a center-work program, set the shift direction and shift amount carefully to avoid interference between the turret and tailstock, which could cause damage to the machine. (Applies only to machines equipped with a tailstock.)
4. You will probably use a variety of workpiece shapes and materials, and the chucking method will differ according to the workpiece type. Therefore, when checking a program with the workpiece clamped in the chuck, check for interference carefully, taking the workpiece shape and material, and the chuck gripping force, into account. Depending on these factors, the cutting tool, holder, or turret head might interfere with the workpiece, chuck, fixture, or tailstock (if featured), causing damage to the machine.
5. When the emergency stop button or reset key has been pressed to stop the machine during a threading operation or a hole machining operation, especially a tapping operation, carefully feed the axes after checking the workpiece and cutting tool carefully for damage. If you feed the axes without due care, the workpiece and cutting tool may collide or interfere with each other, and this could cause damage to the machine.
6. Do not discharge coolant while the spindle is not rotating.

   In addition, take measures to ensure that coolant does not enter the spindle bearings when it is discharged while the spindle is rotating. If coolant enters the spindle bearings, the spindle will be damaged.
7. Support the workpiece securely before stepping on the chuck clamp/unclamp footswitch to remove it. If you step on the footswitch without taking this precaution the workpiece will fall and this could cause damage to the machine.
8. If abnormal vibration or chattering is generated during machining due to improper combination among jig, cutting tool, workpiece material, etc., change the machining conditions to proper values. If machining is continued forcibly under the machining conditions with improper values, it will bring critical problems for the machine and accuracy such that the bearings is damaged quickly and cutting tool is worn excessively will take place.
9. If data is set for "COMMON" ("EXT" for MSC-**) on the WORK OFFSET screen by specifying G10 or system variable commands, the workpiece zero point is shifted in the same direction in all of the work coordinate systems, G54 - G59. Careless data setting for COMMON of the WORK OFFSET screen causes the tool or the turret to interfere with the chuck resulting in damage to the machine.

3 TO ENSURE HIGH ACCURACY

The accuracy of the finished product cannot be maintained unless the following points are observed when operating the machine. Failure to observe these points can also cause serious injuries and damage to the machine. Study these points carefully before operating the machine.

1. **Provide a chucking allowance that is large enough to ensure that the workpiece will not come out of the chuck due to cutting forces or the centrifugal force generated by spindle rotation. Depending on the shape of the workpiece, it may need to be supported by the tailstock (applies only to machines equipped with a tailstock). If the workpiece flies out of the chuck during machining it could cause serious injuries or damage to the machine.**
2. **Workpiece materials and shapes vary widely among machine users, and Mori Seiki cannot predict the requirements for individual cases. Give full consideration to the workpiece material and shape in order to set the appropriate machining conditions. If inappropriate settings are used, the workpiece and cutting tool could fly out during machining, causing serious injuries or damage to the machine. Inappropriate settings will also adversely affect machining accuracy.**
3. **When forged or cast workpieces are used, the cutting allowance with respect to the finished dimensions varies greatly. Either write a program which takes the variation into consideration or perform pre-machining so that a uniform cutting allowance is left on the workpiece. If this caution is not observed, the workpiece could fly out during machining, causing serious injuries or damage to the machine. In addition, an excessive load could be applied to the cutting tool, breaking it.**

1. When machining bar stock on a machine equipped with a bar feeder or spindle through-hole, use straight workpieces only. When machining bar stock with a diameter smaller than that of the spindle (or draw bar), always use guide bushes in order to prevent vibration. If you use a bent workpiece or fail to use guide bushes, the machine will vibrate and the workpiece will shake; this could cause damage to the machine. It will also seriously affect machining accuracy.
2. When setting the tooling, refer to the turret interference diagram and axis travel diagram in the maintenance manual (DRAWINGS or PARTS LIST I published separately) so as to avoid interference. In the case of machines with two spindles, also make sure there will be no interference during workpiece transfer. Careless tooling will lead to interference between the tools and the workpiece, chuck, chuck jaws, covers, tailstock (if featured) or headstock 2 (if featured), which could cause damage to the machine.

1. When chucking or supporting a workpiece, take the rigidity of the workpiece into account when determining the chucking or supporting method and chucking pressure or tailstock thrust force (if a tailstock is featured), so as not to distort the workpiece. If the workpiece is distorted the machining accuracy will be adversely affected.
2. If any chips become entangled with the workpiece or cutting tool, machining accuracy will be adversely affected. Select a cutting tool and machining conditions which do not cause entangling of chips.

4 CAUTIONS RELATING TO SPINDLE SPEED

The cautions that relate to spindle speed are given below. Observe these cautions during programming.

1. **The spindle speed limit set using G50 must be no higher than the lowest of the individual allowable speed limits for the chuck, fixture, and cylinder. If you set a higher speed the workpiece will fly out of the machine, causing serious injuries or damage to the machine.**
2. **In the G96 (constant surface speed control) mode, the spindle speed increases as the cutting tool approaches the center of the spindle.**

   Near the center of the spindle, the spindle speed will reach the allowable maximum speed of the machine. At this speed, the chuck gripping force, cutting force, and centrifugal force cannot be balanced to hold the workpiece securely in the chuck. As a result, the workpiece will fly out of the machine, causing serious injuries or damage to the machine.

   The spindle speed limit must always be specified in a part program by using the G50 command in a block preceding the G96 block, in order to clamp the spindle speed at the specified speed.
3. **When a G97 speed command is used in a program, specification of the maximum speed with a G50 command will be ignored. Therefore, when specifying the spindle speed with a G97 command, specify a speed no higher than the lowest speed among the allowable speed limits for the chuck, fixture, and cylinder. If you set a higher speed the workpiece will fly out of the machine, causing serious injuries or damage to the machine. (FANUC)**
4. **The setting of the spindle speed override switch (if there is one) is valid even when a spindle speed limit is set using G50.**

   If the switch is set to 110% or 120%, for example, the programmed spindle speed will be overridden in accordance with this setting. If this causes the actual spindle speed to exceed the allowable speed of the chuck, fixture, or cylinder, the workpiece will fly out of the chuck during machining, causing serious injuries or damage to the machine.

   Therefore, the spindle speed override switch must be set at 100% or lower.

NOTE When the spindle speed control mode is switched from the G96 mode to the G97 mode, if no spindle speed is specified in the G97 block, the spindle speed obtained in the block immediately preceding the G97 block is used as the spindle speed for the G97 mode operation.

Therefore, if no spindle speed is specified in the G97 block, the spindle speed for the G97 mode will depend on the position of the cutting tool in the block preceding the G97 block, and this could adversely affect machining accuracy and shorten the life of the tool.

When switching the spindle speed control mode to the G97 mode, always specify a spindle speed.

5 CAUTIONS RELATING TO THE RAPID TRAVERSE RATE

The cautions that relate to the rapid traverse rate are given below. Observe these cautions during programming.

WARNING

When setting the G00 mode approach to the workpiece, determine the approach paths carefully, taking the workpiece shape and cutting allowance into consideration. The approach point in the Z-axis direction should be more than "chucking allowance + 10 mm" away from the workpiece end face.

When the spindle is rotating, centrifugal force acts on the chuck jaws, reducing the chuck gripping force. This can cause the workpiece to come out of the chuck.

Unless the approach point is at least "chucking allowance + 10 mm" away from the workpiece end face, the cutting tool could strike the workpiece while moving at the rapid traverse rate if the workpiece does come out of the chuck, or if there is a large amount of material to be removed. This could cause accidents involving serious injuries or damage to the machine.

CAUTION If X- and Z-axis movements are specified in the same block in the G00 mode, the tool path is not always a straight line from the present position to the programmed end point. Make sure that there are no obstacles in the tool path, remembering that X- and Z-axis movement is at the rapid traverse rate. If the workpiece, fixture or tailstock (if featured) lies in the tool path, it could interfere with the tool, tool holder, or turret head. Depending on the workpiece holding method, there could also be interference with the chuck and chuck jaws. This interference will cause damage to the machine.

6 CAUTIONS RELATING TO CENTER-WORK

The cautions that apply when carrying out center-work or both-center-work are given below. Observe these cautions during programming. (Applies only to machines equipped with a tailstock.)

In machining programs for both-center-work, specify the M11 command to unclamp the chuck before the M30 command to reset and rewind the program. If the M11 command is not executed and the (START) switch is pressed by mistake, automatic operation will start and the operator may be injured.

However, if the M11 command is executed when the center at the spindle side is held by the chuck during programming, the center will fall or shift, which in turn will cause the workpiece to fall, causing damage to the machine. If the center at the spindle side is held by the chuck, do not execute the M11 command. (Applies only to machines equipped with a tailstock.)

In a center-work program, if you program approach movement by specifying the X-axis and Z-axis commands in the same block in the G00 mode, the cutting tool could strike the tailstock.

For center-work, move the Z-axis first and then the X-axis to position the cutting tool at the approach point.

In the cutting tool retraction operation, retract the cutting tool in the X-axis direction first to a point where continuing cutting tool movement does not result in interference with the tailstock. After that, move the Z-axis to the required retraction position. (Applies only to machines equipped with a tailstock.)

7 CAUTIONS RELATING TO COORDINATE SYSTEM SETTING

The cautions that apply when setting the coordinate system are given below.
Observe these cautions during programming.

When the coordinate system is set using G50, the start and end points of the part program must be the same point.

At the end of a part program, the tool wear offset data of the cutting tool used to set the coordinate system must be canceled.

If you do not cancel the tool wear offset data, the X and Y coordinate values will be shifted by the tool wear offset data each time the program is executed. This will shift the start (end) point of the program, which could cause interference between the cutting tool, holder or turret head and the workpiece, chuck, fixture, or tailstock (if featured), causing accidents involving serious injuries or damage to the machine.

1. When setting the coordinate system using the machine coordinate system setting function, any mistake in specifying the X and Z values in the G50 block will cause interference between the cutting tool, tool holder, or turret head, and the workpiece, chuck, fixture, or tailstock (if featured), damage to the machine, or will cause the cutting tool failing to reach the cutting position.
2. When the coordinate system is set using G50, do not input the tool geometry offset data. If you input this data, the workpiece zero point will be shifted by the amount of the tool geometry offset data, which could cause interference between the cutting tool, holder or turret head and the workpiece, chuck, fixture, or tailstock (if featured), causing damage to the machine.

8 CAUTIONS RELATING TO G CODES

The cautions that relate to G codes (also called "preparatory codes") are given below.

Observe these cautions during programming.

1. Never specify "G28 X0 Z0;" to return the axes to the machine zero point, since the axes will first be positioned at the workpiece zero point (X0, Z0) and then moved to the machine zero point, and this may cause the cutting tool to strike the workpiece.

   Instead, specify "G28 U0 W0;" to return the axes directly from the present position to the machine zero point.

2. In the G98 mode, the turret moves at the feedrate specified by the F code even when the spindle is not rotating. Make sure that the cutting tool will not strike the workpiece, etc., since this could cause damage to the machine.

3. When using the stored stroke check function, always execute a machine zero return operation after switching the power ON, otherwise the function will not be valid. If the machine is operated in this condition it will not stop even if the cutting tool enters the prohibited area, and this could cause damage to the machine. (stored stroke check specification)

1. When specifying G codes in a block, they must be placed before the addresses (other than G and M) which are executed under the mode they establish. If a G code is specified after addresses for which it establishes the mode of processing, the mode established by it is not valid to these addresses.

2. When executing a dwell using the G04 command, if the cutting tool is kept in contact with the workpiece at a position such as the bottom of a groove for a long time it will shorten the life of the tool nose as well as adversely affecting machining accuracy.

   The dwell period should be the time it takes for the spindle to rotate approximately one turn.

9 CAUTIONS RELATING TO M CODES

The cautions that relate to M codes (also called "miscellaneous codes") are given below. Observe these cautions during programming.

1. Do not stop the spindle or rotary tool (milling specification) by specifying the M05 command while the cutting tool is in contact with the workpiece. If the spindle or rotary tool (milling specification) is stopped while the cutting tool is in contact with the workpiece, the cutting tool could be damaged.
2. Rotate the spindle or rotary tool by executing either M03 or M04 (M13 or M14 for the milling specification) command before the cutting tool comes into contact with the workpiece. If the cutting tool is brought into contact with the workpiece while it is not rotating, the cutting tool could be damaged.
3. Always specify an M05 command to stop spindle rotation before using a pull-out finger or workpiece pusher, etc. If spindle rotation is not stopped the machine could be damaged.
4. Specify the M10 or M11 command in a block without other commands, and specify the G04 command in the next block to allow the chuck to complete the clamp or unclamp operation correctly. Since the time required for the chuck to carry out the clamp or unclamp operation varies depending on the chuck type and chucking pressure, the dwell time should be a little longer than the actual clamp/unclamp time.

   If G04 is not specified in the block following the M10 or M11 block, the next block will be executed while the chuck is still opening or closing, and this could cause damage to the machine.
5. When the M73 command is specified, make sure that the turret head or headstock 2 spindle (Applies only to machines equipped with two spindles) is retracted to a position where it will not interfere with the parts catcher when it swings out to the chuck side position. Interference could cause damage to the machine.
6. When the automatic door is closed by specifying the M86 command, make sure that your fingers, etc., do not get caught in the door and that there are no obstacles that will prevent the door from closing. If your fingers are caught in the door you could be injured.

7. Specify the M25 command (to extend the tailstock spindle) or M26 command (to retract the tailstock spindle) in a block without other commands, and specify the G04 command in the next block to suspend program operation for a period long enough to allow the tailstock spindle to extend and the center to hold the workpiece correctly, or long enough to allow the tailstock spindle to retract into the tailstock correctly.

   If G04 is not specified in the block following the M25 or M26 block, the next block will be executed before the workpiece is held by the center properly, or before the tailstock spindle has retracted properly; the tool, holder, or turret head will then interfere with the tailstock spindle or tailstock spindle center, causing damage to the machine.

   The period of time specified for suspension of program execution should be longer than the time required to extend or retract the tailstock spindle. (Applies only to machines equipped with a tailstock.)

8. Specify the M73 command (to swing the parts catcher out) or M74 command (to swing the parts catcher in) in a block without other commands, and specify the G04 command in the next block to suspend program operation for a period long enough to allow the parts catcher to complete the swing in/out operation.

   If G04 is not specified in the block following the M73 or M74 block, the next block will be executed before the parts catcher has reached the swing in/out end position; the tool, holder, or turret head will then interfere with the parts catcher, causing damage to the machine.

   The period of time specified for suspension of program execution should be longer than the time required for the parts catcher to complete the swing IN or swing OUT operation. (Applies only to machines equipped with a parts catcher.)

FOREWORD

Machining workpieces in a CNC lathe requires programs.

This manual describes the items that are required to create programs.

An overview of each chapter is given below.

A: BEFORE PROGRAMMING

This chapter describes the basics for creating a program. It is written for beginners who might be creating a program for the first time.

B: G FUNCTIONS

This chapter describes the G functions. The G codes are also called the preparatory functions. The NC determines the machining method and axis control mode for each block according to the specified G code.

C: M FUNCTIONS

This chapter describes the M functions. The M codes are also called the miscellaneous functions. In addition to serving in auxiliary roles when used with G codes, M codes are used to suspend program execution, discharge or stop coolant, etc.

D: T, S, AND F FUNCTIONS

This chapter describes the T, S, and F functions. The T function rotates the turret to index the required tool and calls the tool offset number. The S function specifies the spindle speed, rotary tool spindle speed or cutting speed. The F function specifies the feedrate of the cutting tool.

E: AUTOMATIC TOOL NOSE RADIUS OFFSET

This chapter describes how the automatic tool nose radius offset function works. Because the cutting edge of the tool does not come to a sharp point, but is slightly rounded, the position of the tool nose actually engaged in cutting differs slightly from the point assumed for program writing. The error caused by this difference is automatically offset by specifying the appropriate G codes (G41, G42).

F: MANUAL TOOL NOSE RADIUS OFFSET

This chapter describes how the value for tool nose offset is determined. Because the tool edge does not come to a sharp point, but is slightly rounded, the position of the tool nose actually engaged in cutting differs slightly from the point assumed for program writing. By manually calculating the offset data and slightly shifting the tool nose, the programmed tool point (imaginary tool nose) can be offset to coincide with the cutting point.

G: CUTTER RADIUS OFFSET

This chapter describes the cutter radius offset function used by the Y-axis specification machines of the SL, SL-S, and TL series. Cutter radius offset means the shift of the tool path by the radius amount to the right or left from the programmed path. This function is mainly used for pocket cutting or contouring with the end mill.

H: MULTIPLE REPETITIVE CYCLES

This chapter describes the multiple canned cycles. Using a multiple canned cycle, roughing processes that would otherwise require several blocks of commands can be defined by a single block of commands, preceded by a G code that calls a multiple canned cycle. This is followed by blocks that define the finished shape. The tool paths from rough cutting cycles to finishing cycles are generated automatically.

I: HOLE MACHINING CANNED CYCLE

This chapter describes hole machining canned cycle function. It specifies hole machining cycle using commands in one block including a G function, which usually requires several blocks.

J: TOOL LIFE MANAGEMENT B FUNCTION (OPTION)

This chapter describes the tool life management B function. The tool life management B function automatically selects an available tool in a registered tool group if the tool called in the same group has been used to the preset life.

K: EXAMPLE PROGRAMS

This chapter describes the programming procedure using several examples.

APPENDIX

The appendix shows a program for center work with consideration given to safety.

Please read this Programming Manual carefully. The manual is written to help you operate your CNC lathe more effectively.

BEFORE READING THIS PROGRAMMING MANUAL

To machine a workpiece in a CNC lathe, a program must be created. This manual describes the basic information to be understood before starting programming and several example programs. When reading this manual, always remember the following points.

Also please note that the programs and portions of programs given in this manual are only examples that help readers understand the explanation easier. Therefore, the programs in this manual are not always applicable to actual production. Programming method and numeric values in a program such as machining conditions must be determined meeting actual machine operating environment including the workpiece material and shape.

WARNING

① **The programmer is requested to read this manual carefully and observe the cautions it contains when creating programs, so as to ensure the safety of the operator during operation. If the cautions in this manual are ignored when creating a program, the machine may operate in an unexpected manner when the program is run, causing accidents involving serious injuries or damage to the machine.**

② **Explanation for programs will include the discussion on parameters. The parameters are set on shipment in accordance with the machine specifications; do not change them without first consulting Mori Seiki. If the parameters are changed without consultation, the machine may operate in an unexpected manner, causing accidents involving serious injuries or damage to the machine.**

CAUTION

① There are two methods for specifying the coordinate values; an absolute command and an incremental command. In this manual, the absolute command is usually being described. Unless otherwise stated, the program can also be created using incremental commands. When a specified method using incremental commands is different from one using absolute commands, or if either an absolute or an incremental command cannot be used, some cautionary notes will be described at that point.

Absolute commands and incremental commands are discussed in detail in Chapter A.

For absolute commands and incremental commands, refer to page A–20 (8.).

② The illustrations used in this manual may vary depending on the machine model.

③ The contents of this manual apply to machine tools which conform to JIS standards.

For CNC lathes that have a reversed JIS specification for the X-axis, refer to page A–33 (12.).

CAUTION

④ The illustrations of cutting tools in this manual may not indicate the correct setting orientation, since this will differ according to the machine model.

Make sure the correct relationship between the cutting tool mounting position and the workpiece (spindle) rotation direction when writing a program.

⑤ With G and M codes, standard format and F15 format are available. The command format differs between standard format and F15 format for some of the G and M codes and such differences are explained in the related items in this manual. Pay attention to the difference when creating a program.

⑥ Please note that all of the functions and optional devices/equipment explained in this manual are not always available with the delivered machine.

Retrofitting of such functions and optional devices/equipment is not always possible. For details, contact Mori Seiki.

NOTE In this manual, the various models are classified under the generic names indicated in the table below.

Generic Name	Models	NC Unit
SL series	SL-150, SL-150MC, SL-150Y SL-200, SL-200MC SL-250, SL-250MC SL-303, SL-303MC, SL-303Y SL-400, SL-400MC SL-600, SL-600MC SL-25E, SL-65, SL-65MC, SL-75, SL-75MC	MSC-500 MSC-501 MSG-501 MSD-501 MSD-501II
SL-S series	SL-150S, SL-150SMC, SL-150SY SL-200S, SL-200SMC SL-250S, SL-250SMC	MSC-501 MSD-501II
VL series	VL-25 VL-55, VL-55MC	MSC-500
TL series	TL-40, TL-40MC, TL-40Y	MSC-518 MSD-518 MSD-518II
LL series	LL-7, LL-8	MSC-501 MSD-501II
CL series	CL1500, CL1500T CL2000, CL2000T	MSC-500

CHAPTER A
BEFORE PROGRAMMING

This chapter describes the basic considerations for creating a program.

CONTENTS

A : BEFORE PROGRAMMING

1. What is a Program? A–1

2. What is Required of Programmers? A–1

3. What is “Creating a Program”? A–2

4. Inputting the Program to the Machine A–2

5. Flow until the Product is Completed A–3
   - 5.1 Flow of Operation A–3
   - 5.2 Check Items A–4

6. Terms for Programming A–8
   - 6.1 Program Number A–8
   - 6.2 Sequence Number A–9
   - 6.3 Part Program A–9
   - 6.4 Address A–10
   - 6.5 Data A–10
   - 6.6 Word A–11
   - 6.7 Block A–11
   - 6.8 Summary A–11

7. Axis Control and Direction A–12
   - 7.1 Movement along the Controlled Axes A–12
     - 7.1.1 SL, TL Series A–12
     - 7.1.2 SL-S Series A–13
     - 7.1.3 VL Series A–14
     - 7.1.4 LL Series A–15
     - 7.1.5 CL Series A–16
   - 7.2 Expressing Axis Movement in Programming A–17

8. Specifying the Dimensions A–20
8.1 Absolute Commands A–20
8.2 Incremental Commands A–22
8.3 Summary A–24

9. Specifying the Cutting Conditions A–25

10. Basic Pattern of Program A–27
10.1 Chuck-Work Programming A–27
10.2 Center-Work Programming A–28
10.3 Both-Center-Work Programming A–29

11. Cautions for Creating a Program A–30
11.1 Program Number A–30
11.2 Space between the Words in the Program A–30
11.3 Signs and Symbols A–30
11.4 Inputting a Decimal Point A–31
11.5 Role of Decimal Point A–32

12. JIS Specification and Reverse JIS Specification A–33

1. What is a Program?

The “program” here is an instruction for machine operation consisting of letters of the alphabet and numerals in combination.

All operations of the machine, including “spindle rotation”, “tool movement”, or “coolant discharge” can be controlled by a program.

When creating such programs, the information discussed in this manual will be necessary. Please carefully read this manual and thoroughly understand the information before creating a program.

Creating a program is called “programming”.

2. What is Required of Programmers?

Programmers must have a thorough of knowledge about machining operation. They should write programs and observe the points listed below to ensure accurate, efficient operation with safety. Programmers must:

① Develop a knowledge of the theory of cutting.

② Acquire a good knowledge of workpiece holding tools (chuck, fixtures, tailstock).

③ To prevent accidents which might occur during machining, select appropriate tools taking into consideration the shape and material of workpiece as well as machining conditions, such as spindle speed, feedrate or depth of cut.

④ Understand the machining performance of the machine to be used.

⑤ Understand the safety devices and interlock functions featured by the machine to be used.

⑥ Become familiar with the functions related to programming.

3. What is “Creating a Program”?

When creating a program:

1) Check the part print to determine the machining required.
2) Examine the section to be machined, the fixtures and the tools that need to be used. Creating a program as soon as you see a part print could lead to unproductive and dangerous operation of the machine.
3) Determine the machining processes based on these requirements and the dimensions given on the part print.
4) According to the machining processes required, create a program using letters of the alphabet and numerals.
5) When you have created a program, carefully check its contents.

4. Inputting the Program to the Machine

When the program is created, input the program into the NC memory using the keyboard on the NC operation panel. Check the contents of the program that has been input on the screen. A decimal point may be likely to be omitted. To avoid such a careless mistake, write the numerical data in the manner as indicated below.

<Example>

① Z.5 → Z0.5

② X200. → X200.0

After inputting the program, check the input program carefully on input error and omission of the data in the program.

Write the program clearly and accurately so that anyone can read it. If the operator misreads the program and inputs incorrect data, the workpiece could fly out of the chuck during machining, and the cutting tools, holders or turret head, could collide with the workpiece, chuck, fixture or tailstock (tailstock specification), resulting in serious injuries or damage to the machine.

5. Flow until the Product is Completed

5.1 Flow of Operation

This section describes the flow of operation, including programming. Follow and understand the flow so that the operation can be performed smoothly.

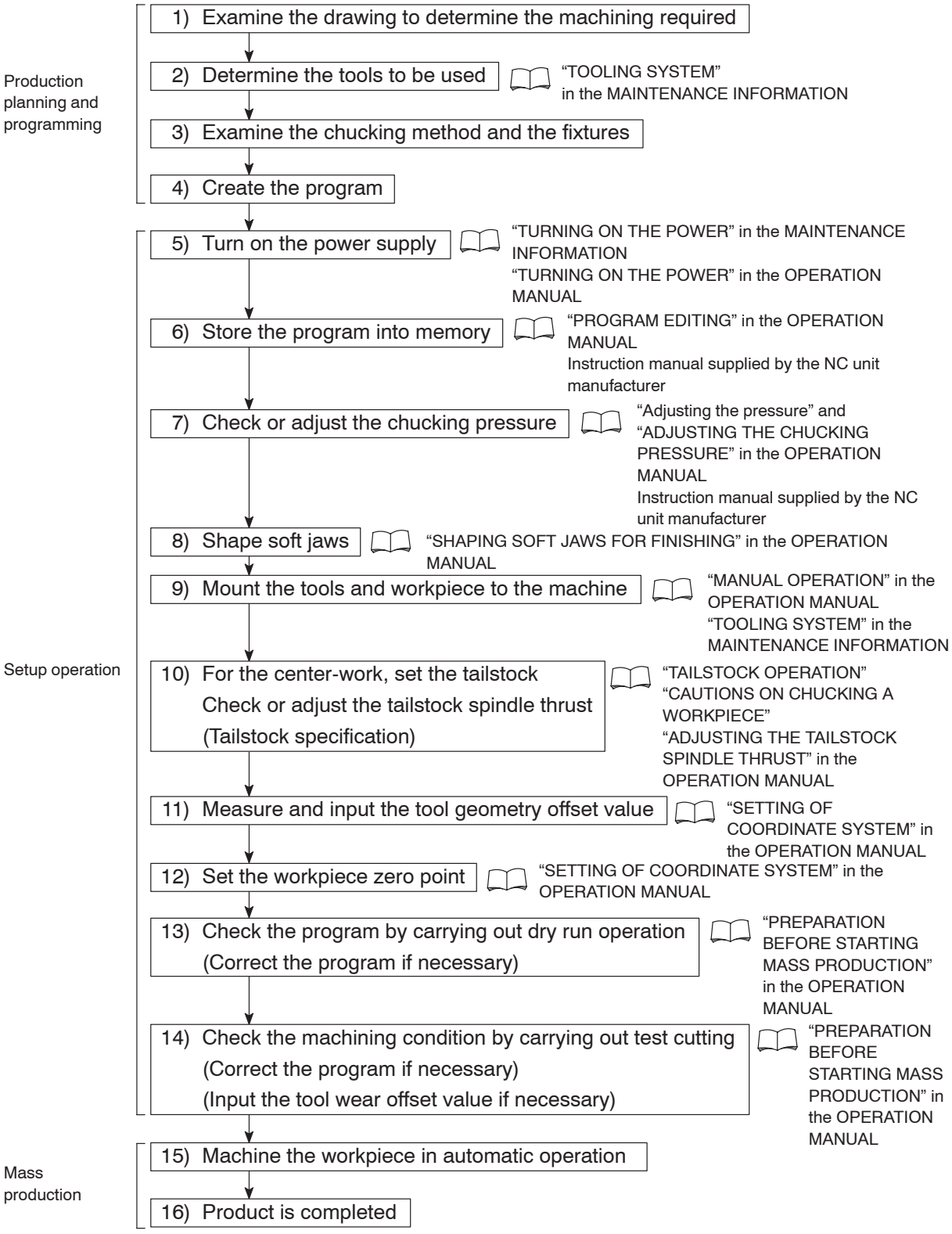

5.2 Check Items

The items to be checked in the course of programming and before starting machine operation are summarized in the following tables. Check these items to ensure smooth operation.

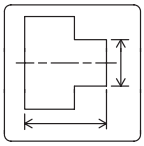

Reading the Drawing

	Check Items	Check Column
1.	Are tolerances readable on the drawing?	
2.	Are the symbols used to indicate accuracy understandable?	
3.	Are the shape and material of the workpiece blank made clear?	
4.	Are the processes before and after the processes to be carried out on the NC lathe made clear?	
5.	Can the workpiece be machined to the specified accuracies on the NC lathe?	
6.	Are the keys for machining understandable?	
7.	Is the use of the workpiece made clear?	
8.	Have you read all the dimensions and notes on the drawing?	
9.	Is the drawing kept clean, with no unnecessary information entered on it?	

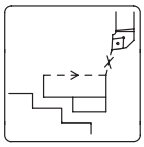

Order and Conditions of Machining

	Check Items	Check Column
1.	Are the order of machining and machining conditions determined in accordance with the shape and material of the workpiece blank?	
2.	Are the chucking method and chucking pressure setting determined correctly?	
3.	Are the cutting tools and replaceable tips selected correctly?	
4.	Are the machining processes appropriate for the shape and material of the workpiece blank?	
5.	Is machining free of interference?	

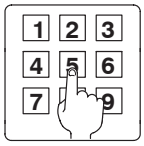

Inputting the Program

	Check Items	Check Column
1.	When inputting the program for a particular process, is the program for the next process taken into consideration?	
2.	Is the program being written to suit the shape and material of the workpiece blank?	
3.	Is a decimal point entered in all numerical values?	
4.	Is the sign (+, –) preceding numerical values correct?	
5.	Are feed modes (rapid traverse and cutting feed) used correctly?	
6.	Are approach paths and cutting feed identified?	
7.	Is all input data checked for correctness?	
8.	Is the program free of errors caused by lack of concentration?	

(To the next page)

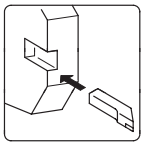

Mounting the Tools

	Check Items	Check Column
1.	Are tool holders and cutting tools cleaned before mounting?	
2.	Are the replaceable tool tips new?	
3.	Are the material and shape of replaceable tool tips appropriate?	
4.	Are replaceable tool tips mounted securely and correctly?	
5.	Is the tool overhang appropriate?	
6.	Is the replaceable tool tip mounting angle correct?	
7.	Are mounting bolts tightened securely and evenly?	
8.	Is the tool nose center height correct?	

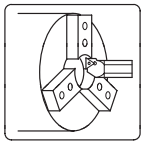

Shaping and Mounting the Soft Jaws

	Check Items	Check Column
1.	Are the soft jaws and master jaws cleaned before mounting?	
2.	Are the soft jaw mounting positions correct?	
3.	Are the soft jaw mounting bolts tightened securely and evenly?	
4.	Is the mounting bolt length appropriate?	
5.	Is the plug (ring) used for shaping the soft jaws to the correct size?	
6.	Is the chucking pressure checked and adjusted?	
7.	Is the DOOR INTERLOCK key-switch placed in the **NORMAL** position?	
8.	Is the front door closed?	
9.	Are the cutting tools, replaceable tool tip, spindle speed, and feedrate all correct for shaping soft jaws?	
10.	Is the workpiece contact face area appropriate?	
11.	Is relief provided at the soft jaw corners?	
12.	Are run-out on I.D. and end face waviness measured?	

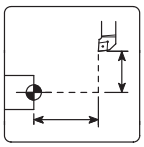

Tool Offset

	Check Items	Check Column
1.	Is due consideration given to possible interference during measurement of tool offset data?	
2.	Are the spindle speed, feedrate, and depth of cut used for the measuring tool offset data appropriate?	
3.	Is the DOOR INTERLOCK key-switch placed in the **NORMAL** position?	
4.	Is the front door closed?	
5.	Is the standard tool selection appropriate?	
6.	Is the measured dimension correct?	
7.	Is the calculation for offset data correct?	
8.	Is the offset direction correct?	
9.	Is the tool offset number correct?	
10.	Are the tool geometry offset data, tool wear offset data, and coordinate system used for offset identified correctly?	

(To the next page)

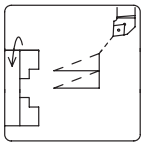

Dry Run Operation

	Check Items	Check Column
1.	Is the chucking pressure been checked and adjusted?	
2.	If performing center work, is the tailstock spindle thrust checked and adjusted?	
3.	Is the DOOR INTERLOCK key-switch placed in the **NORMAL** position?	
4.	Is the front door closed?	
5.	Is the single block function turned on?	
6.	Are the feedrate and spindle speed appropriate for operation?	
7.	Are the feed modes (rapid traverse and cutting feed) used correctly?	
8.	Is the tool retraction direction after cutting correct?	
9.	Is tool movement smooth in the calculated area?	
10.	Are the tools free of interference with the workpiece, soft jaws, and chuck?	
11.	Is the turret head indexed at a position where there is no interference with the workpiece?	
12.	Can the machine be stopped immediately when necessary?	

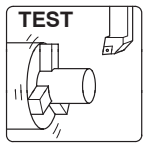

Test Cutting

	Check Items	Check Column
1.	Is the chucking pressure been checked and adjusted?	
2.	If performing center work, is the tailstock spindle thrust checked and adjusted?	
3.	Is the DOOR INTERLOCK key-switch placed in the **NORMAL** position?	
4.	Is the front door closed?	
5.	Is the single block function turned on?	
6.	Are the feedrate and spindle speed appropriate for operation?	
7.	Are the order of machining and machining conditions determined in accordance with the shape and material of the workpiece blank?	
8.	Are cutting tools and replaceable tool tips selected properly?	
9.	Is the workpiece chucking method correct?	
10.	Is the progress of cutting been observed?	
11.	Are coolant supply volume and direction correct?	
12.	Are the cutting tools free of interference with the workpiece, soft jaws and chuck?	
13.	Are the dimensions measured after the rough cutting process?	
14.	Are the settings for feed override and rapid traverse override correct?	
15.	Can the machine be stopped immediately when necessary?	

(To the next page)

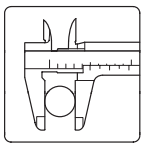

Measuring

	Check Items	Check Column
1.	Is the measuring instrument functioning correctly?	
2.	Is the choice of measuring instrument correct?	
3.	Is the measuring order correct?	
4.	Is the measuring method appropriate?	
5.	Is the area to be measured indicated clearly?	
6.	Is the area to be measured free of chips and coolant?	
7.	Are the dimensions measured after the rough cutting process?	
8.	Is the workpiece cool when the dimensions are measured?	

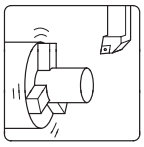

Mass Production

	Check Items	Check Column
1.	Is the DOOR INTERLOCK key-switch placed in the **NORMAL** position?	
2.	Is the front door closed?	
3.	Are all NC functions such as single block functions used to check the program turned off?	
4.	Is dimensional variation checked?	
5.	Are run-out on I.D. and O.D., and end face waviness measured?	
6.	Is a target work time established on the basis of the machining time for one workpiece?	
7.	Is tool nose wear observed?	
8.	Are the dimensions measured after the rough cutting process?	

6. Terms for Programming

This section describes the basic terms that must be understood for creating a program.

6.1 Program Number

Several programs can be stored in the NC memory.

Program numbers are used to keep multiple programs arranged in numerical order. Program numbers appear at the beginning of a program stored in the memory.

A program number is set by inputting numbers four digits or less after the alphabet “O”. Numbers from 1 to 9999 can be used.

Ex.

O0001; ← Program number
N1;
G50 S2000;
G00 T0101;
⋮
G00 X150.0 Z100.0;
M01;

N2;
G50 S2000;
G00 T0202;
⋮
M30;

NOTE If a program number to be input is already in the memory, that number, and therefore that program cannot be input. Change its number to input the program.

The program number can have less than four significant digits. It can be input using less than four digits.
For example, even if a program number is input as O1, the screen will automatically display “O0001”.

6.2 Sequence Number

The sequence number is used to search for or call the position that is being executed, or to facilitate finding the position you want to edit in the program easily.

The sequence number is expressed as a number of five digits or less (1 to 99999), following the letter “N”.

Generally, the sequence numbers are assigned to the part programs for individual cutting tools in the ascending order in the order the machining processes are executed.

Ex.

```
O0001;
N1;                                    ← Sequence number
G50 S2000;
G00 T0101;
    ⋮
G00 X150.0 Z100.0;
M01;
N2;                                    ← Sequence number
G50 S2000;
G00 T0202;
    ⋮
M30;
```

① If a sequence number consists of more than five digits, the five digits from the least significant position are recognized as the sequence number.

② The sequence number is not necessarily specified. Also, it is not necessary to input numbers with five significant digits.

If a program is too long and exceeds the memory capacity, put the sequence numbers at the beginning of the program for each process, or do not specify these numbers. This will help save memory capacity.

6.3 Part Program

The part program refers to the program which contains all the information necessary for executing the cutting process to be carried out by a single cutting tool.

Each process (1st process, 2nd process...) for machining a component contains the part programs for as many tools as are necessary to complete each process.

Ex.

```
O0001;
N1;
G50 S2000;
G00 T0101;
      ⋮
G00 X150.0 Z100.0;
M01;
```

Part program for the tool No. 1

```
N2;
G50 S2000;
G00 T0202;
      ⋮
M30;
```

Part program for the tool No. 2

6.4 Address

An address is expressed using letters of the alphabet.

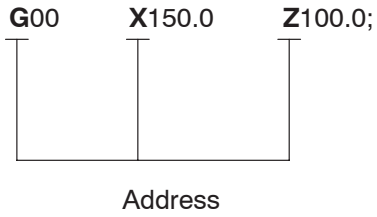

6.5 Data

The numbers (including the sign and decimal point) that follow the address are called the “data”.

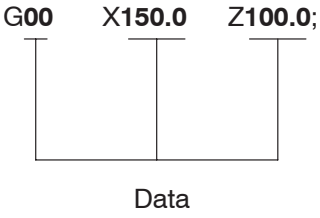

NOTE In addition, the information (program and other) to be input to the NC for machining the workpiece is also called the data. Determine the type of data from the explanation of the statement.

6.6 Word

A word is the minimum unit for specifying functions. A word consists of an address and the data.

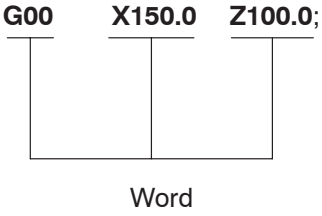

6.7 Block

A block is the minimum command unit necessary to operate a machine (including the NC unit). It is also the minimum unit used to create a part program. A block consists of words.

On the program sheet, each one line corresponds to one block.

O0001; . . . . . First block
N1; . . . . . Second block
G50 S2000; . . . . . Third block

NOTE Specify the end of a block with [;].

6.8 Summary

A program consists of words, a combination of address and data, and of blocks, a combination of words, as shown below.

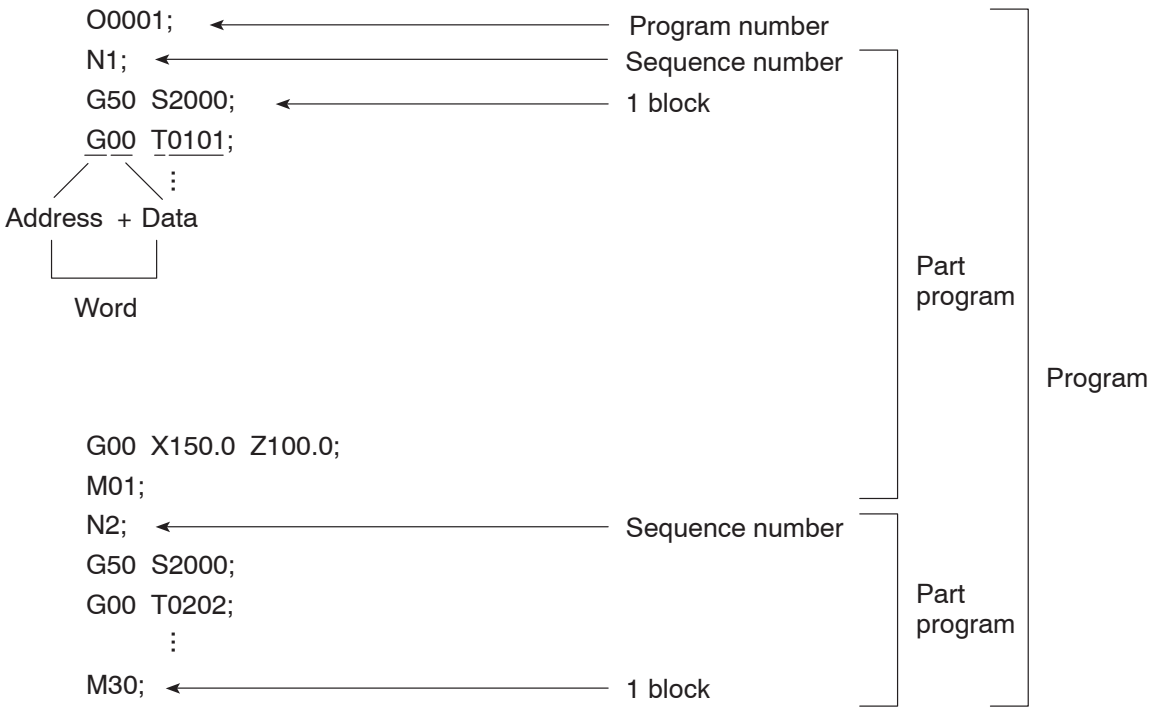

7. Axis Control and Direction

This section describes movement along the controlled axes and its relationship with the program.

Knowing the direction of the controlled axes is essential when creating a program.

7.1 Movement along the Controlled Axes

This section deals with the axis definition and how the axis movement is defined in programming.

7.1.1 SL, TL Series

In the SL, TL series, the controlled axes and their directions are determined as follows:

Axis	Unit	+ and – Direction
X	Turret	+ direction: The direction in which the machining diameter increases. (the direction in which a cutting tool moves away from the spindle center line.)
Z	Turret	+ direction: The direction in which a cutting tool moves away from the spindle. (the direction in which the cutting tool is viewed from the spindle.)
C (MC type, Y-axis specification)	Spindle	– direction: The rotation direction in which the right-hand thread advances when viewing a cutting tool from the spindle.
Y (Y-axis specification)	Turret	+ direction: The direction in which a cutting tool moves up when viewing the machine from the front.

NOTE For the X-axis reversed JIS specification machine, positive and negative directions of the X-axis are reversed from those applied to conventional specification machines.

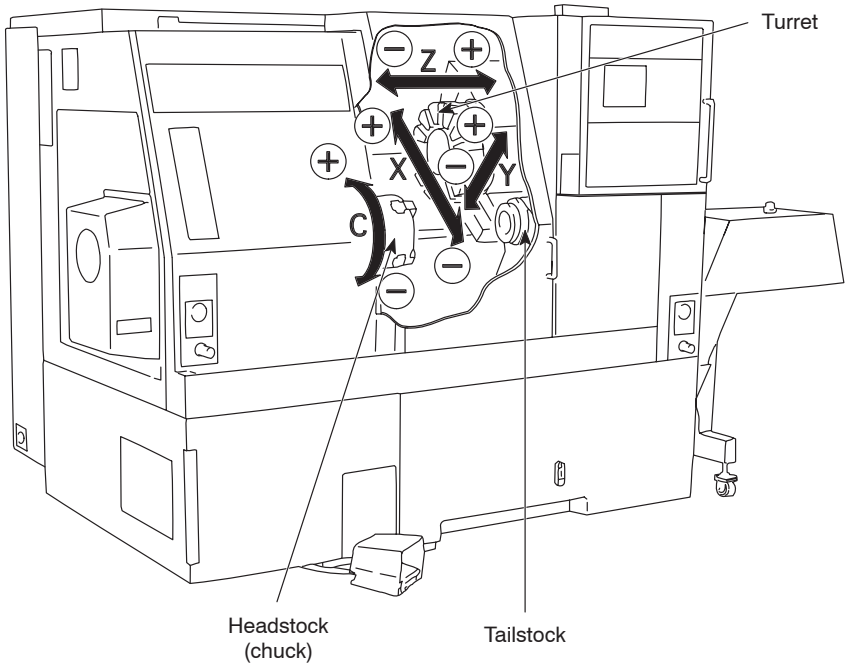

7.1.2 SL-S Series

In the SL-S series, the controlled axes and their directions are determined as follows:

Axis	Unit	+ and – Direction
X	Turret	+ direction: The direction in which the machining diameter increases. (the direction in which a cutting tool moves away from the spindle (spindle 1 or spindle 2) center line.)
Z	Turret	+ direction: The direction in which a cutting tool moves away from spindle 1. (the direction in which the cutting tool is viewed from spindle 1.)
C (MC type, Y-axis specification)	Spindle 1	– direction: The rotation direction in which the right-hand thread advances when viewing a cutting tool from spindle 1.
	Spindle 2	+ direction: The rotation direction in which the right-hand thread advances when viewing a cutting tool from spindle 2.
Y (Y-axis specification)	Turret	+ direction: The direction in which a cutting tool moves up when viewing the machine from the front.
B	Spindle 2	+ direction: The direction in which spindle 2 moves away from spindle 1. (the direction in which spindle 2 is viewed from spindle 1.)

NOTE For the X-axis reversed JIS specification machine, positive and negative directions of the X-axis are reversed from those applied to conventional specification machines.

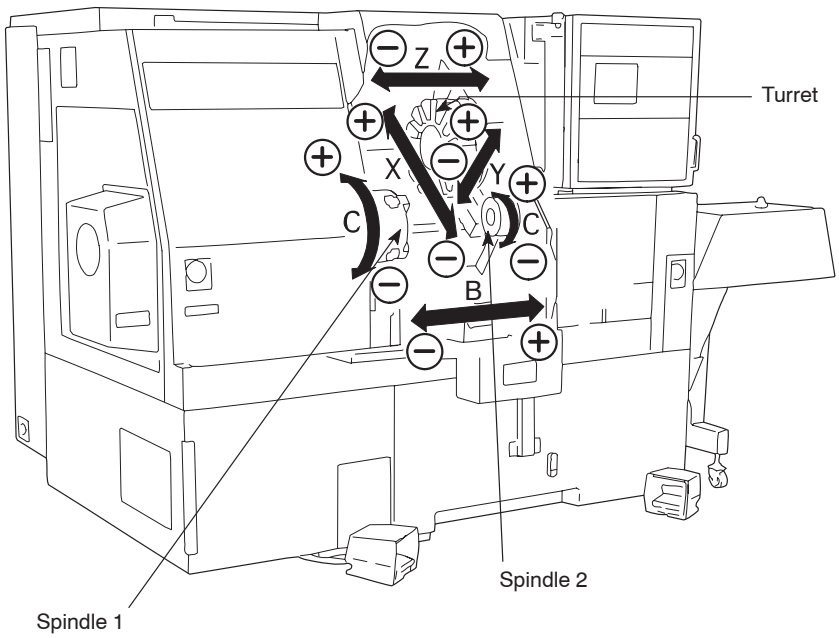

7.1.3 VL Series

In the VL series, the controlled axes and their directions are determined as follows:

Axis	Unit	+ and – Direction
X	Turret	+ direction: The direction in which the machining diameter increases. (the direction in which a cutting tool moves away from the spindle center line.)
Z	Turret	+ direction: The direction in which a cutting tool moves away from the spindle. (the direction in which the cutting tool is viewed from the spindle.)

NOTE For the X-axis reversed JIS specification machine, positive and negative directions of the X-axis are reversed from those applied to conventional specification machines.

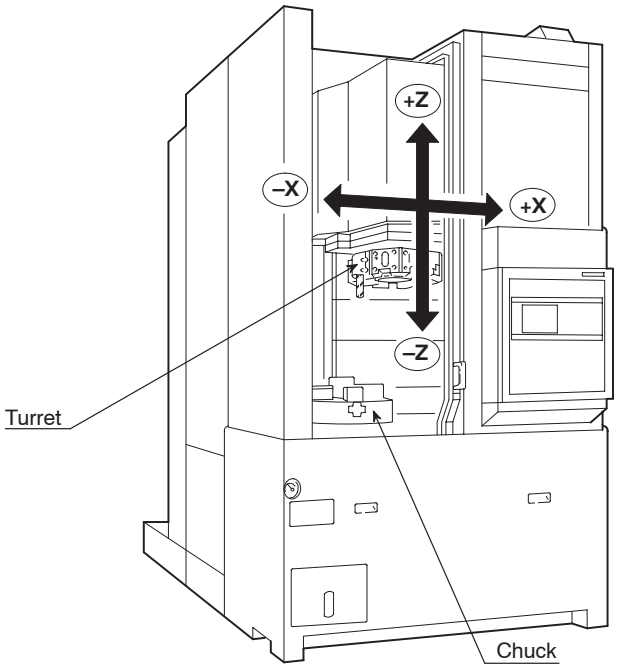

7.1.4 LL Series

In the LL series, the controlled axes and their directions are determined as follows:

Axis	Unit	+ and – Direction
X	Front-side turret	+ direction: The direction in which the machining diameter increases. (the direction in which a cutting tool moves away from the center of rotation)
	Rear-side turret	+ direction: The direction in which the machining diameter decreases. (the direction in which a cutting tool moves toward the center of rotation)
Z	Front-side turret	+ direction: The direction in which a cutting tool moves away from the workpiece. (the direction in which the cutting tool is viewed from the spindle.)
	Rear-side turret	

7.1.5 CL Series

In the CL series, the controlled axes and their directions are determined as follows:

Axis	Unit	+ and – Direction
X	Turret	+ direction: The direction in which the machining diameter increases. (the direction in which a cutting tool moves away from the spindle center line.)
Z	Turret	+ direction: The direction in which a cutting tool moves away from the spindle. (the direction in which the cutting tool is viewed from the spindle.)

NOTE For the X-axis reversed JIS specification machine, positive and negative directions of the X-axis are reversed from those applied to conventional specification machines.

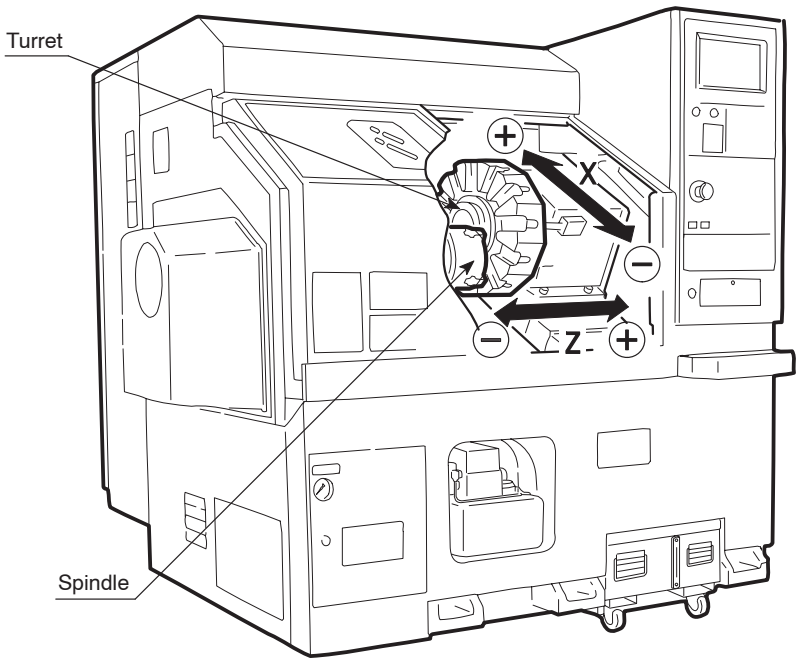

7.2 Expressing Axis Movement in Programming

When writing a program, the numerical values used for specifying axis position and positive/negative sign used for determining axis movement direction vary depending on the position taken as the reference for programming.

The reference position (workpiece zero point) and axis movement direction are determined as follows:

Workpiece zero point	To write a program, the origin for the program, e.g. the workpiece zero point must be determined. The workpiece zero point (X0, Z0) is taken as the reference for programming and also for machining.
X-axis	The diametral dimensions of a product are expressed using address X. X0 is taken on the center line of the product.
Z-axis	The longitudinal dimensions of a product are expressed using address Z. Z0 is taken on the end face of the finished product.
C-axis (MC type, Y-axis specification)	Spindle index angle for executing milling is expressed using address C. C0 is taken at the zero point of the C-axis.
Y-axis (Y-axis specification)	The dimensions measured in right angle direction to X-axis and Z-axis are expressed using address Y. Y0 is taken on the spindle center line.

<SL, TL series>

<Chuck work>

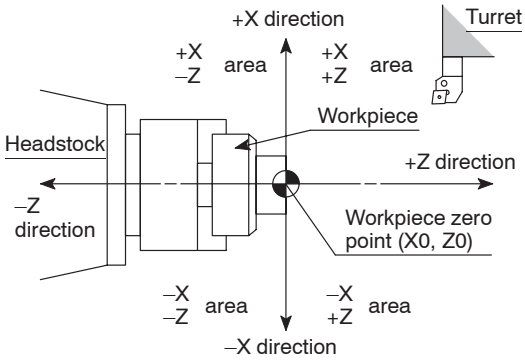

<Center work>

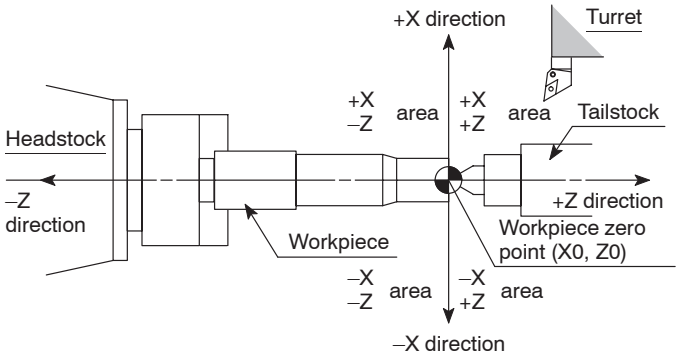

<X-axis and Y-axis>

Used in Y-axis specification machine.

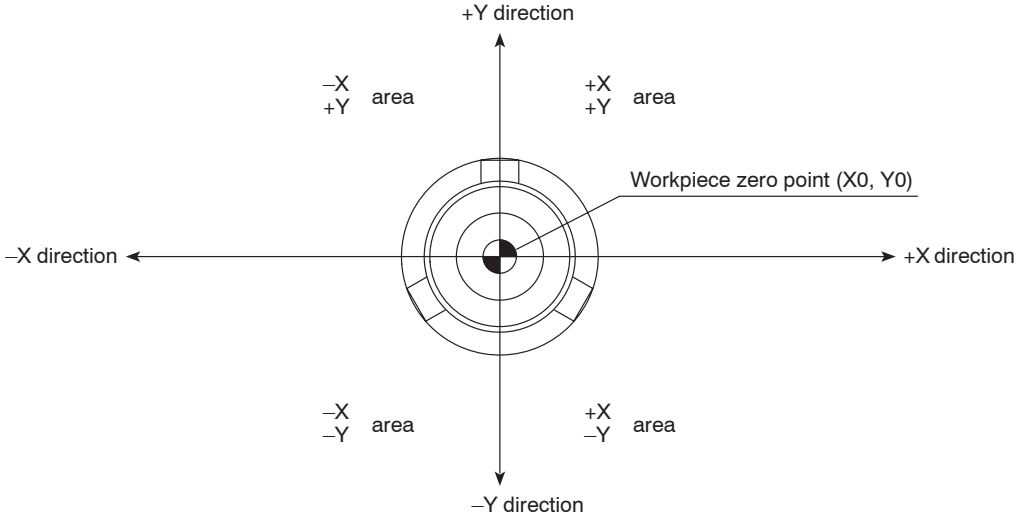

<SL-S series>

<Headstock 1 side>

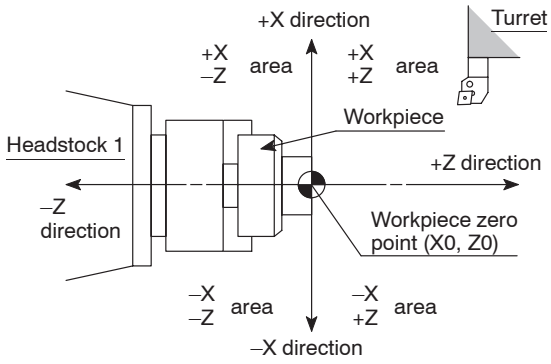

<Headstock 2 side>

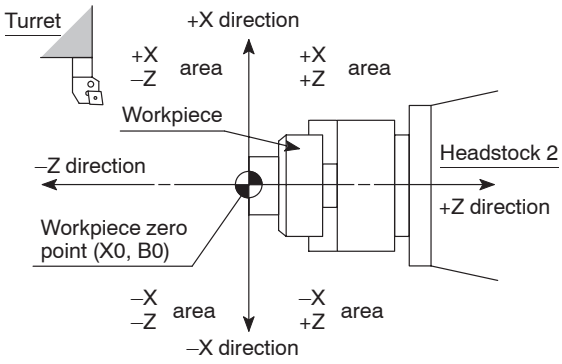

NOTE In cutting off operation, spindle 2 moves in the Z-axis direction when it receives a workpiece from spindle 1.

With the SL-S series, this movement is made along the B-axis.

<VL series>

<Chuck work>

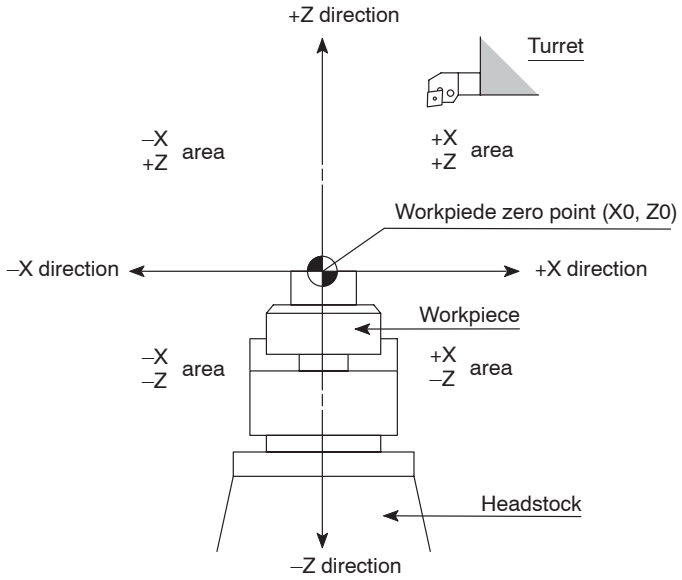

<LL series>

<Chuck work>

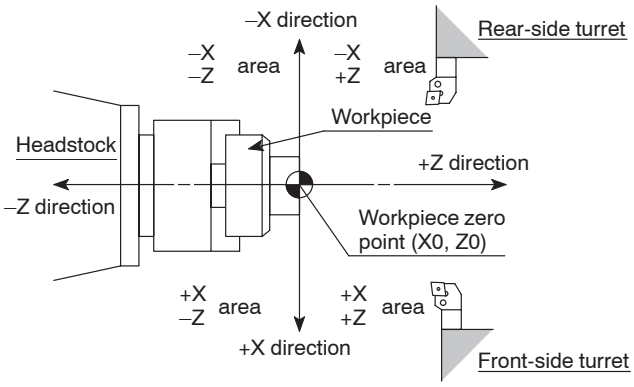

<CL series>

<Chuck work>

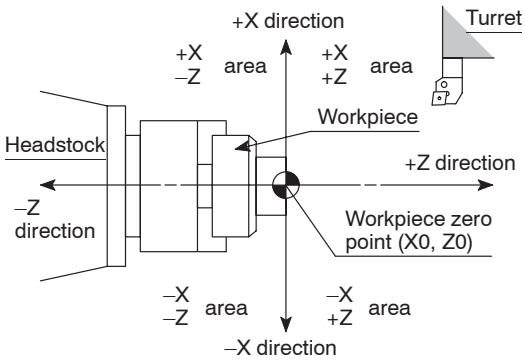

<Center work>

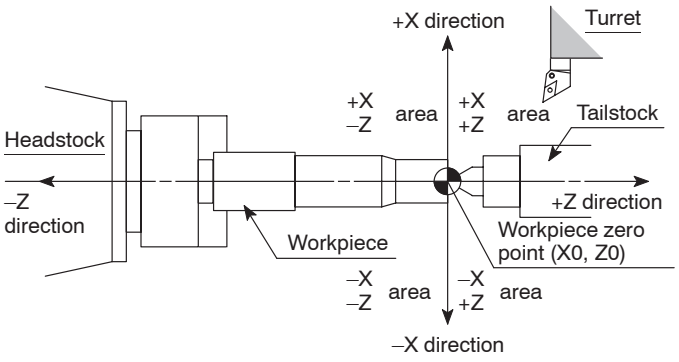

8. Specifying the Dimensions

To specify tool movement from the presently located point to the next point (target point), the following two types of commands can be used.

1) Absolute commands
2) Incremental commands

When writing a program, it is necessary to understand the nature of these two types of dimension specifying commands.

This section deals with the basic and the command specifying method for using the absolute and incremental commands in a program.

8.1 Absolute Commands

Absolute commands define a specific point by the distance from the workpiece zero point (X0, Z0) with a (+) or – sign.

① In a program using absolute commands, the axes are expressed using the following address characters:

X-axis→X_ ; Z-axis→Z_ ;

② With the SL-S series, absolute commands of the B-axis is expressed as “B_ ;”.

③ With the Y-axis specification machine, absolute commands of the Y-axis is expressed as “Y_ ;”.

④ With the MC type and the Y-axis specification machine, absolute commands of the C-axis is expressed as “C_ ;”.

Ex. Specifying the absolute commands (1)

To express tool movement from point ① to point ② using absolute commands.

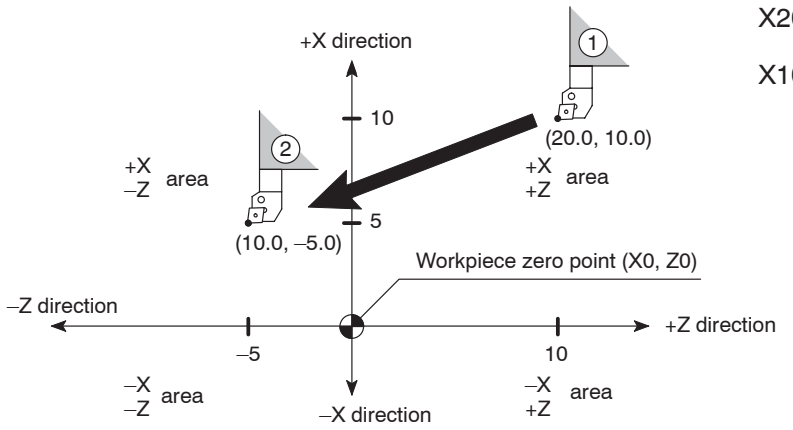

X20.0 Z10.0; . . . . . ①

X10.0 Z–5.0; . . . . . ②

NOTE For the X-axis, since dimensions are all expressed in diametral values, actual X-axis movement distance is a half of the specified value.

① The positive (+) sign may be omitted.

X+10.0→X10.0 Z+10.0→Z10.0

② The values specified as (○, ○) in the illustration above indicate the coordinate values (X, Z).

Ex. Specifying the absolute commands (2)

To express tool movement (point ① → point ② → point ③ → point ④ → point ⑤) using absolute commands.

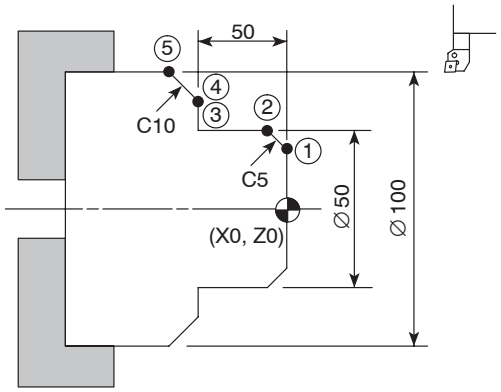

① X40.0

X40.0 Z0; . . . . . ①

X50.0 Z–5.0; . . . . . ②

(X50.0) Z–50.0; . . . . . ③

X80.0 (Z–50.0); . . . . . ④

X100.0 Z–60.0; . . . . . ⑤

Since the commands in ( ) are the same as in the previous block, they can be omitted.

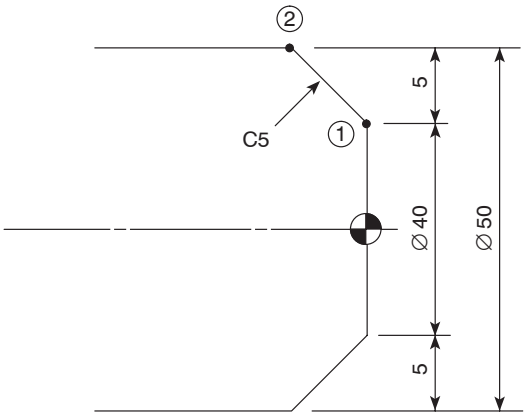

④ X80.0 and ⑤ Z–60.0

To determine X coordinate of point ①, subtract C5 chamfer size (5 mm) from the workpiece diameter 50 mm.

Chamfer size 5 mm should be converted into diametral value.

5 mm × 2 = 10 mm

∅50 – (5 × 2) = 40

Therefore, X coordinate of point ① is X40.0.

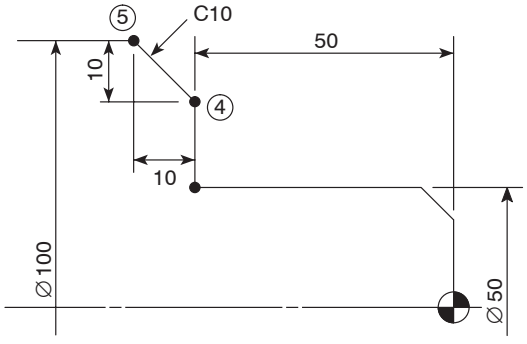

To determine X coordinate of point ④, subtract C10 chamfer size (10 mm) from the workpiece diameter 100 mm.

Chamfer size 10 mm should be converted into diametral value.

10 mm × 2 = 20 mm

∅100 – (10 × 2) = 80

Therefore, X coordinate of point ④ is X80.0.

To determine Z coordinate of point ⑤, add chamfer size 10 mm to 50 mm. Since the Z dimensions are all measured in the negative direction from the workpiece zero point, the calculation should be,

(–50) + (–10) = –60

Therefore, Z coordinate of point ⑤ is Z–60.0.

8.2 Incremental Commands

Incremental commands define relative position on a given coordinate system by specifying the motion distance from the present position. The positive sign indicates that the position to be defined is in the positive direction from the present position.

NOTE For the B-axis, an incremental command cannot be used.

① In a program using incremental commands, the axes are expressed using the following address characters:

X-axis→U_ ; Z-axis→W_ ;

② With the Y-axis specification machine, incremental commands of the Y-axis is expressed as “V_ ;”.

③ With the MC type and the Y-axis specification machine, incremental commands of the C-axis is expressed as “H_ ;”.

Ex. **Specifying the incremental commands (1)**

To express tool movement from point ① to point ② using incremental commands.

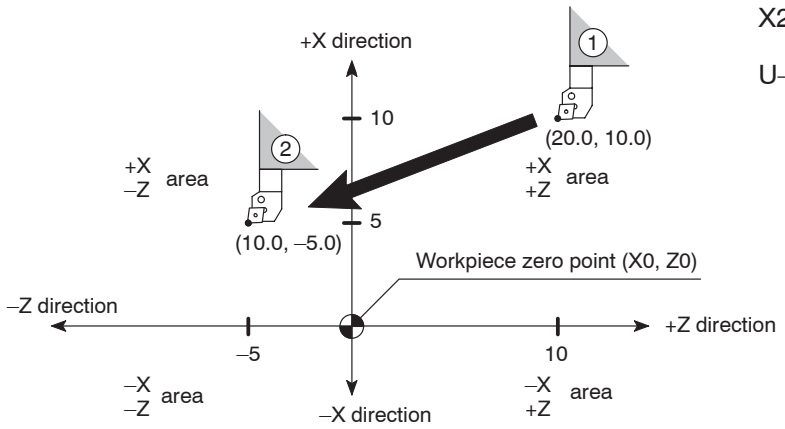

X20.0 Z10.0; . . . . . ①

U–10.0 W–15.0 ; . . . . . ②

NOTE For the X-axis (U command), since dimensions are all expressed in diametral values, actual X-axis movement distance is a half the specified value.

① The positive (+) sign may be omitted.

U+10.0→U10.0 W+15.0→W15.0

② The values specified as (○, ○) in the illustration above indicate the coordinate values (X, Z).

Ex. **Specifying the incremental commands (2)**

To express tool movement (point ① → point ② → point ③ → point ④ → point ⑤) using incremental commands.

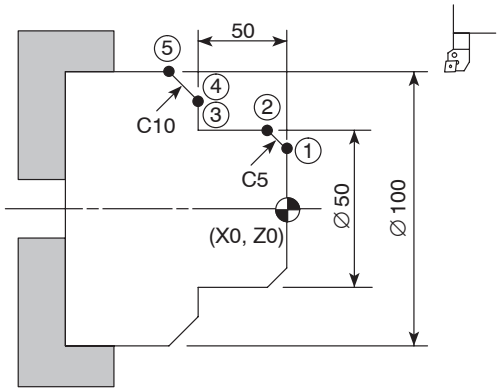

X40.0 Z0; . . . . . ①

U10.0 W–5.0; . . . . . ②

(U0) W–45.0; . . . . . ③

U30.0 (W0); . . . . . ④

U20.0 W–10.0; . . . . . ⑤

Since the commands in ( ) are the same as in the previous block, they can be omitted.

② U10.0 W–5.0

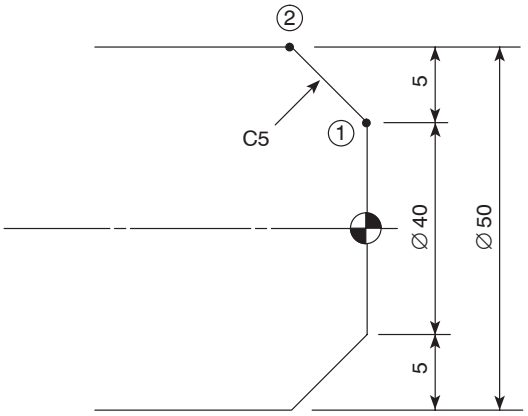

X coordinate value of point ② is X50.0; chamfering of C5 (5 mm) is executed from point ① (X40.0) to point ②.

Chamfer size 5 mm should be converted into diametral value.

5 mm × 2 = 10 mm

Therefore, coordinate value of U is U10.0.

Z coordinate value of point ② is Z–5.0; Z-axis moves 5 mm in the negative direction from point ① (Z0).

Therefore, coordinate value of W is W–5.0.

④ U30.0 (W0) and ⑤ U20.0 W–10.0

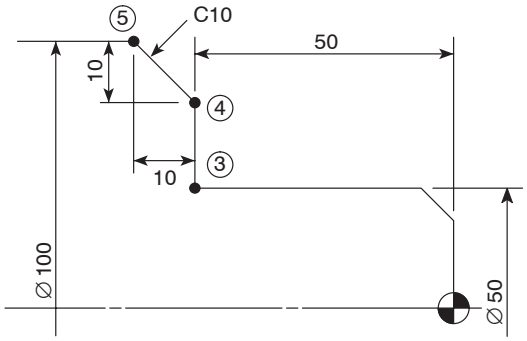

X coordinate value of point ④ is X80.0; X-axis moves 30 mm in the positive direction from point ③ (X50.0).

Therefore, coordinate value of U is U30.0.

Tool movement from point ③ to point ④ is made only in the X-axis direction. In such a case, Z-axis movement command (W0) may be omitted.

X coordinate value of point ⑤ is X100.0; chamfering of C10 (10 mm) is executed from point ④ (X80.0) to point ⑤.

Chamfer size 10 mm should be converted into diametral value.

10 mm × 2 = 20 mm

Therefore, coordinate value of U is U20.0.

Z coordinate value of point ⑤ is Z–60.0; Z-axis moves 10 mm in the negative direction from point ④ (Z–50.0).

Therefore, coordinate value of W is W–10.0.

8.3 Summary

Differences between absolute programming and incremental programming are summarized below.

	Absolute Programming	Incremental Programming
Address Characters	X_ Z_ Y_ C_ ; B_ ;	U_ W_ V_ H_ ;
Meaning of the Sign (+/–)	The area where the specified point exists.	The direction in which the cutting tool advances.
Meaning of the Numerical Values	Coordinate values (distance from the workpiece zero point, angle of index from the zero point)	Distance of tool movement, angle of spindle index
Reference Point of Commands	Workpiece zero point (X0, Z0, Y0) Zero point (C0) (B0)	Actual positions of tool and spindle

① Generally, a program is written using absolute commands.

Incremental commands are usually used for tool retraction or chamfering operation.

② Absolute commands and incremental commands may be specified in the same block such as “X_ W_ ;”, “U_ Z_ ;”, and “X_ V_ ;”.

③ If absolute and incremental commands representing the same axis (X and U, Z and W, Y and V, or C and H) are specified in the same block, the address character specified later becomes valid.

Example: X10.0 U–20.0; → U–20.0 is valid.

9. Specifying the Cutting Conditions

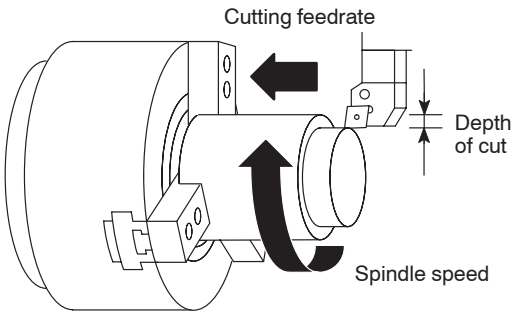

The cutting conditions that are set when programming have a great influence on the machining efficiency and accuracy. These conditions must be checked carefully.

The following four cutting conditions are necessary for machining the workpiece.

1) Spindle speed (min^{-1}), cutting speed (surface speed) (m/min)

The spindle speed or cutting speed is specified directly following address S (S function).

COMMAND

G97 S400; ..... Spindle speed 400 min^{-1}

G96 S200; ..... Cutting speed 200 m/min

2) Cutting feedrate (mm/rev) (mm/min)

Feedrate is specified directly following address F (F function).

COMMAND

G99 F0.1; ..... Feedrate per spindle revolution, 0.1 mm/rev

G98 F100; ..... Feedrate per minute, 100 mm/min

3) Depth of cut

There is no special function used to specify the depth of cut. Depth of cut is specified using tool movement along the X- or Z-axis.

NOTE For multiple repetitive cycles, depth of cut may be specified using an address.

For details of multiple repetitive cycles, refer to Chapter H “MULTIPLE REPETITIVE CYCLES”.

4) Chuck gripping force

The chuck gripping force is reduced when the spindle is rotated since the rotation applies centrifugal force to the chuck jaws. This reduction of the chuck gripping force could cause the workpiece to fly out of the chuck during machining, causing serious injuries or damage to the machine. Therefore, when checking a program, measure the chuck gripping force that will actually be applied when the spindle is rotated at the speed used for machining by using a gripping force meter. If the measured chuck gripping force value is lower than that required to hold the workpiece safely, change machining conditions such as the chucking pressure, spindle speed, feedrate, and depth of cut.

Periodically measure the chuck gripping force with a gripping force meter to make sure that the required gripping force is maintained. If it is not, consult the chuck manufacturer and cylinder manufacturer.

For details on the relationship between the spindle rotation speed and chuck gripping force, refer to the instruction manuals prepared by the chuck manufacturer and cylinder manufacturer.

For details of chuck gripping force, refer to the instruction manuals prepared by the chuck and cylinder manufacturers.

10. Basic Pattern of Program

10.1 Chuck-Work Programming

When creating a part program for each tool (O.D. cutting tool, thread cutting tool etc.), the following basic patterns are used.

O0001;	Program number (This is specified only once at the beginning of all programs.)
N1;	Sequence number (This is specified at the beginning of a part program.)
G50 S_ ;	Specifies the maximum spindle speed for clamping. In the G96 (constant surface speed control) mode, spindle speed is clamped at this speed if a command requiring a higher speed is specified.
G00 T0101 M41(M42, M43, M44);	Specifies the tool number, the tool offset number, and the spindle speed range.
G96 S150 M03(M04);	G96 specifies the cutting speed (150 m/min).
or,	
G97 S150 M03(M04);	G97 specifies the spindle or spindle 1 speed (150 min^{-1}) and the direction of rotation. M03: Normal M04: Reverse
(G00) X_ Z20.0 M08;	Approach to the workpiece at a rapid traverse Start of coolant supply
	NOTE When specifying rapid approach to the workpiece, study the workpiece shape carefully. For the approach in the Z-axis direction, positioning must be made at a point "chucking amount + 10 mm" away from the end face of the workpiece.
G01 X_ Z_ F_ ;	Approach to the workpiece at a cutting feedrate to ensure safety.
⋮ Machining program ⋮	
G00 U1.0 Z20.0 M09;	Escape from the machining area, stop of coolant supply
	NOTE For I.D. cutting, determine the escape stroke depending on the diameter having been machined. Note that the escape U command must be specified as U–_.
X_ Z_ ;	Move to a position where the turret head can be rotated.
M01;	Optional stop
The part program same as *	Part programs are written for each tool.
M01;	Optional stop
The part program same as *	The spindle stop command (M05) is entered in the last part program. Part programs are written for each tool.
M30;	End of program

NOTE M41 to M44 commands can be specified only for the machine equipped with a transmission.

10.2 Center-Work Programming

O0001;	Program number (This is specified only once at the beginning of all programs.)
N1;	Sequence number (This is specified at the beginning of a part program.)
G50 S_ ;	Specifies the maximum spindle speed for clamping. In the G96 (constant surface speed control) mode, spindle speed is clamped at this speed if a command requiring a higher speed is specified.
G00 T0101 M41(M42, M43, M44);	Specifies the tool number, the tool offset number, and spindle speed range.
G96 S150 M03(M04);	G96 specifies the cutting speed (150 m/min).
or,	
G97 S150 M03(M04);	G97 specifies the spindle speed (150 min^{-1}) and the direction of rotation. M03: Normal M04: Reverse
Z_ M08;	Approach to the workpiece (Z-axis direction) Start of coolant supply
X_ ;	Approach to the workpiece (X-axis direction)
	NOTE If the cutting tool might interfere with the center, stop the rapid traverse at a safe point and continue the approach at a cutting feedrate (G01). The feedrate for approach should be a little faster than a cutting feedrate.
Machining program	
G00 X_ M09;	Escape along the +X-axis, stop of coolant supply
Z_ ;	Move to a position where the turret head can be rotated.
M01;	Optional stop
The part program same as *	Part programs are written for each tool.
M01;	Optional stop
The part program same as *	The spindle stop command (M05) is entered in the last part program. Part programs are written for each tool.
M30;	End of program

NOTE M41 to M44 commands can be specified only for the machine equipped with a transmission.

10.3 Both-Center-Work Programming

O0001; Program number (This is specified only once at the beginning of all programs.)

N1; Sequence number (This is specified at the beginning of a part program.)

*

G50 S_ ;
Specifies the maximum spindle speed for clamping. In the G96 (constant surface speed control) mode, spindle speed is clamped at this speed if a command requiring a higher speed is specified.

G00 T0101 M41(M42, M43, M44);
Specifies the tool number, the tool offset number, and spindle speed range.

G96 S150 M03(M04);
G96 specifies the cutting speed (150 m/min).

or,

G97 S150 M03(M04);
G97 specifies the spindle speed (150 min^{-1}) and the direction of rotation.
M03: Normal
M04: Reverse

Z_ M08;
Approach to the workpiece (Z-axis direction)
Start of coolant supply

X_ ;
Approach to the workpiece (X-axis direction)

NOTE If the cutting tool might interfere with the center, stop the rapid traverse at a safe point and continue the approach at a cutting feedrate (G01). The feedrate for approach should be a little faster than a cutting feedrate.

Machining program

G00 X_ M09;
Escape along the +X-axis, stop of coolant supply

Z_ ;
Move to a position where the turret head can be rotated.

M01;
Optional stop

The part program same as *
Part programs are written for each tool.

M01;
Optional stop

The part program same as *
The spindle stop command (M05) is used in the last part program.

M11;
Chuck unclamp command; the STATUS indicator **[CHCL]** goes off.

WARNING

Before specifying the M30 command, execute the M11 command. If the M11 command is not executed and the (ST) switch is pressed by mistake, automatic operation will start and the operator may be injured. However, if the workpiece is supported with the center at the spindle side held by the chuck, do not use the M11 command. If the M11 is specified in a program when the center at the spindle side is held by the chuck, the center will fall or shift, which in turn will cause the workpiece to fall, damaging the machine.

M30;
End of program

NOTE M41 to M44 commands can be specified only for the machine equipped with a transmission.

11. Cautions for Creating a Program

11.1 Program Number

This manual describes all program numbers in a four digit number. However, it is not necessary to write or enter a program number in a four digit number. A program number specified in less than four digit number is recognized and displayed in a four digit number after it is input to the NC. If “O1” is entered, for example, it is recognized and displayed as “O0001”.

NOTE An entry of a program number of five or more digits is not permitted.

11.2 Space between the Words in the Program

In this manual, a program is described in the manner as indicated below.

```
O0001;
N1;
G50␣S2000; ..... ①
G00␣T0101;
      \
       Space
```

In line ①, for example, a space is placed between “G50” and “S2000”. When entering a program to the NC, the word-to-word space may not be inserted.

When a program is input to the NC memory, a space is automatically inserted.

11.3 Signs and Symbols

A program is expressed in a combination of alphabetic letters, positive/negative (+/–) signs, and numbers containing a decimal point. In addition to these, the end of block symbol “;” and the block delete symbol “/” are used.

NOTE Block delete function:

If the block delete function is on, the commands beginning with the slash “/” are ignored up to the end of block code “;” in the same block. The program is continuously executed from the block not containing the slash.

If the block delete function is off, all blocks (even those preceded by a slash) are executed.

The following signs and symbols are also used.

“,” “*” “[ ]” “( )” “#” “@”

11.4 Inputting a Decimal Point

For an NC, it is possible to use a decimal point to enter numerical values. A decimal point can be used to express the numerical values that have the unit of “distance”, “angle”, “time”, or “speed”.

The addresses which allow the use of a decimal point are indicated below.

Distance or angle:	X, Y, Z, C, U, V, W, H, I, J, K, R, B
Time:	U, X
Feedrate:	F

If you forget to enter a decimal point in a program entry that requires one and start the machine without noticing the error, the turret may move to an unexpected position, damaging the machine. Check that you have entered decimal points where necessary.

“mm” setting (specified by G21)

X1.0 . . . . . X1 mm

X1 . . . . . X0.001 mm
(if a decimal point is not entered, it is assumed that the value is specified in the unit of least input increment.)

“inch” setting (specified by G20)

X1.0 . . . . . X1 inch

X1 . . . . . X0.0001 inch
(if a decimal point is not entered, it is assumed that the value is specified in the unit of least input increment.)

① There are limits in the usable units depending on addresses. Setting units are “mm”, “inch”, “degree” and “second”.

X15.0	X15 mm or X15 inches
G04 U1.0	Dwell for 1 second
F10.0	10 mm/rev, 10 mm/min, 10 inch/rev, or 10 inch/min

② In the case of a dwell command, a decimal point can be used when address X is used. However, it is not allowed to use a decimal point if address P is used since address P is also used to specify a sequence number.

① To call for dwell for 1 hour, specify as

```
G04 U3600.0 (X3600.0);
```

(1 hour = 3600 seconds)

② In a program, or in a block, it is allowed to specify the commands with and without a decimal point.

```
X1000 Z23.7;
X10.0 Z22359;
```

11.5 Role of Decimal Point

The following shows how the tool paths are generated if a decimal point is omitted mistakenly.

Ex. **Use a decimal point carefully**

The program to machine the workpiece shape as illustrated below

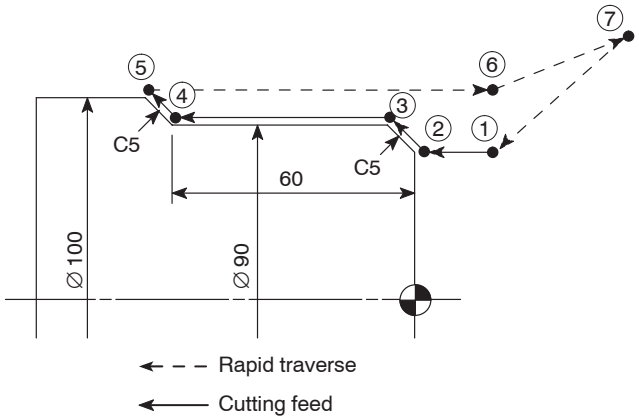

(G99) G00 X78.0 Z20.0 M08;
G01 Z1.0 F2.0;
X90.0 Z–5.0 F0.2; . . . . . ③
Z–60.0;
X102.0 Z–66.0;
G00 U1.0 Z20.0 M09;
X200.0 Z150.0;
⋮

If “X90” is entered for “X90.0” in block ③, the resultant tool paths are generated as in the illustration below.

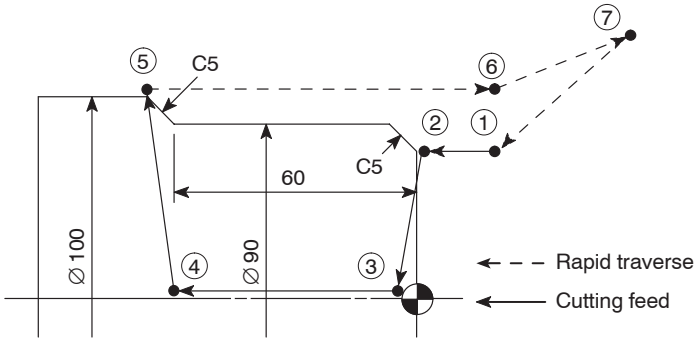

Since the numerical value specified without a decimal point is regarded to have been set in least input increment, “X90” is executed as “X0.09 mm”.

X1.0 = X1 mm

X1 = X0.001 mm

Therefore, use a decimal point when entering numerical values.

WARNING

If you forget to enter a decimal point in a program entry that requires one and start the machine without noticing the error, the turret may move to an unexpected position, damaging the machine. Check that you have entered decimal points where necessary.

12. JIS Specification and Reverse JIS Specification

This section explains items to be kept in mind when creating a program in the JIS specification and in the reverse JIS specification.

The following summarizes the items which differ from the programming in the JIS specification when a program is written in the reverse JIS specification.

1) For the X-axis commands, the positive/negative (+/–) sign is reversed.

   Addresses for which the sign of the data is reversed: X, U, I

Ex.

JIS Specification	Reverse JIS Specification
X100.0	X–100.0
U10.0	U–10.0
I80.0	I–80.0

2) In the circular interpolation, G02 calls for rotation in the counterclockwise (CCW) direction and G03 calls for rotation in the clockwise (CW) direction.

	JIS Specification	Reverse JIS Specification
G02	CW	CCW
G03	CCW	CW

3) In the automatic tool nose R offset function (G41, G42), the offset direction is reversed and command position of the imaginary tool nose differs.

<Offset direction>

	JIS Specification	Reverse JIS Specification
G41	Tool position is offset to the left side of the tool paths in reference to the programmed tool moving direction. 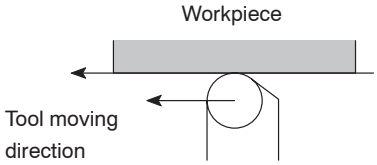	Tool position is offset to the right side of the tool paths in reference to the programmed tool moving direction. 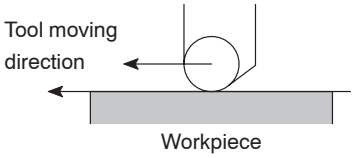
G42	Tool position is offset to the right side of the tool paths in reference to the programmed tool moving direction. 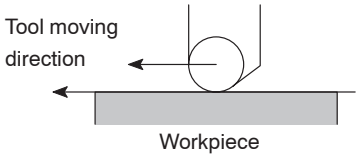	Tool position is offset to the left side of the tool paths in reference to the programmed tool moving direction. 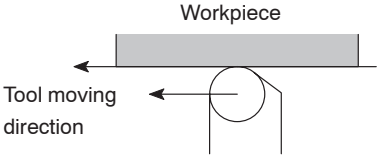

<Imaginary tool nose position>

JIS Specification	Reverse JIS Specification
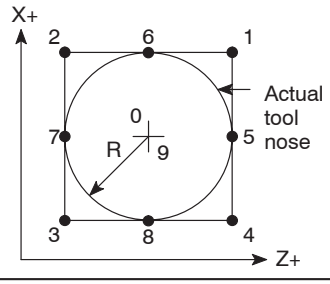	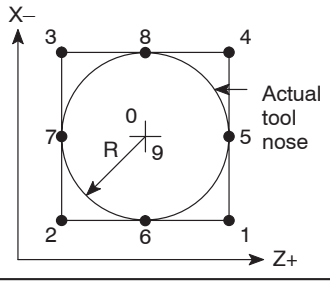

Ex.

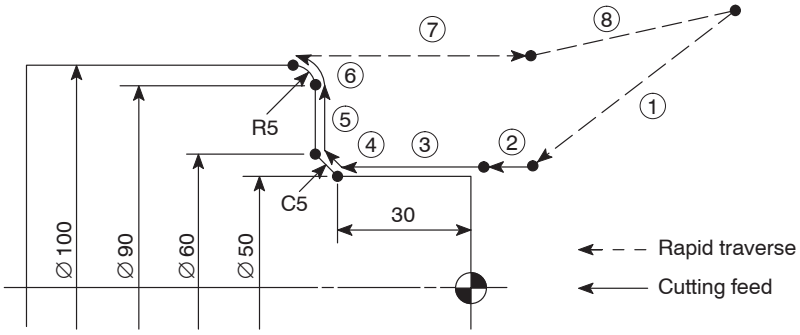

JIS Specification	Reverse JIS Specification
O0001;	O0001;
G50 S2000;	G50 S2000;
G00 T0101;	G00 T0101;
G96 S180 M03;	G96 S180 M03;
G42 X50.0 Z20.0 M08; . . . . . ①	**G41 X–50.0** Z20.0 M08; . . . . . ①
G01 Z2.0 F1.0; . . . . . ②	G01 Z2.0 F1.0; . . . . . ②
Z–30.0 F0.2; . . . . . ③	Z–30.0 F0.2; . . . . . ③
X60.0 Z–35.0; . . . . . ④	**X–60.0** Z–35.0; . . . . . ④
X90.0; . . . . . ⑤	**X–90.0**; . . . . . ⑤
G03 X100.0 Z–40.0 R5.0; . . . . . ⑥	**G02 X–100.0** Z–40.0 R5.0; . . . . . ⑥
G40 G00 **U1.0** Z20.0; . . . . . ⑦	G40 G00 **U–1.0** Z20.0; . . . . . ⑦
X150.0 Z100.0 M09; . . . . . ⑧	**X–150.0** Z100.0 M09; . . . . . ⑧
M01;	M01;

CHAPTER B
G FUNCTIONS

This chapter describes the G functions.

The following G functions are only outlined in this chapter and they are explained in details in Chapters E, G, H, and I, respectively.

– Section 10. “G40, G41, G42 Automatic Tool Nose Radius Offset”: Chapter E
– Section 11. “G40, G41, G42 Cutter Radius Offset”: Chapter G
– Section 15. “G70 - G76 Multiple Repetitive Cycle”: Chapter H
– Section 16. “G80, G83 - G85, G87 - G89 Hole Machining Canned Cycles”: Chapter I

The examples of program given in this chapter all assume tool nose R0.

For the G codes not explained in this chapter, refer to the instruction manual supplied by the NC unit manufacturer.

CONTENTS

B : G FUNCTIONS

1. G Code List B–1

2. G00 Positioning the Cutting Tool at a Rapid Traverse Rate B–5

3. G01 Moving the Cutting Tool Along a Straight Path at a Cutting Feedrate B–10

4. G02, G03 Moving the Cutting Tool Along Arcs at a Cutting Feedrate B–12

5. G50 Setting the Spindle Speed Limit B–14

6. G96 Controlling Spindle Speed to Maintain Surface Speed Constant B–17

7. G97 Controlling Spindle Speed at Constant Speed B–19

8. G04 Suspending Program Execution (Dwell) B–22

9. G98, G99 Setting Feedrate Units B–24

10. G40, G41, G42 Automatic Tool Nose Radius Offset B–28

11. G40, G41, G42 Cutter Radius Offset B–30

12. G32, G92 Thread Cutting (Continuous Thread Cutting and Thread Cutting Cycle) B–33

13. G32 Tapping (On the Center of Spindle) B–49
    - 13.1 Cautions on Programming Tapping Using G32 . . . . . B–50
      - 13.1.1 Dwell Command B–50
      - 13.1.2 Precautions on Using the Tapper B–50
      - 13.1.3 To Finish Tapping at Correct Depth in Blind Hole . . . B–51

14. G90, G94 O.D./I.D. Cutting Cycle and Face Cutting Cycle B–53

15. G70 - G76 Multiple Repetitive Cycle B–56

16. G80, G83 - G85, G87 - G89 Hole Machining Canned Cycles B–58

17. G22, G23 Setting Barrier to Define the Tool Entry Inhibited Zone B–63

18. G28 Returning the Axes to Machine Zero Automatically B–66

19. G53 Selecting the Machine Coordinate System B–68

20. G54 - G59 Setting a Work Coordinate System B–70

21. G38 Workpiece Pushing Check B–73

22. G07.1 (G107) Cylindrical Interpolation B–76

23. G12.1 (G112), G13.1 (G113)
Notching (Polar Coordinate Interpolation) B–82

24. G479 Tailstock Connect B–85

APPENDIX 1 Workpiece Transfer . . . . . APPENDIX B–1

1.1 Work Coordinate System . . . . . APPENDIX B–2

APPENDIX 2 G65 P9020/G65 P9021 Workpiece Transfer
Macro Program (MSD-501II) . . . . . APPENDIX B–4

APPENDIX 3 G65 P9022 Workpiece Ejection
Macro Program (MSD-501II) . . . . . APPENDIX B–12

1. G Code List

G codes are also called preparatory functions. The G codes consisting of the address G and a numerical value that follows address G define the machining method and the axis movement mode in a specified block. The NC establishes the control mode in response to the specified G code.

The numerical value following address G defines the commands written in that block. Depending on how the G codes remain valid, they are classified into the following two types:

Type	Meaning
One-shot G code (G codes in group 00, excluding G10 and G11)	The G code is valid only in the specified block.
Modal G code (G codes in groups other than group 00)	The G code remains valid until another G code in the same group is specified.

For example, G00 and G01 are both modal codes, that is, they are G codes in the group other than group 00.

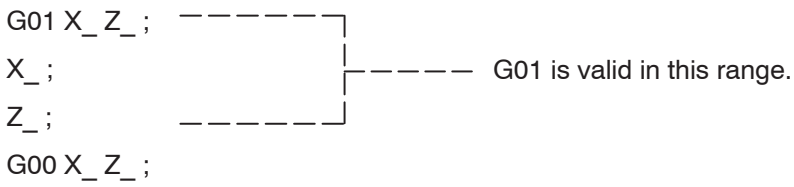

NOTE

① When specifying G codes in a block, they must be placed before the addresses (other than G and M) which are executed under the mode they establish. If a G code is specified after addresses for which it establishes the mode of processing, the mode established by it is not valid to these addresses.

② More than one G code, each belonging to a different G code group, may be specified in the same block.

③ If more than one G code, belonging to the same group, are specified in a block, the one specified later is valid.

④ If a G code not listed in the G code table or a G code for which the corresponding option is not selected is specified, an alarm message (No. 010) is displayed on the screen.

⑤ The NC establishes the G code modes, identified by the ◤ symbol, when the power is turned on or when the RESET (RESET) key is pressed.

Concerning G54, however, pressing the RESET (RESET) key does not establish the G code mode of them but the G code selected for each group remains valid.

NOTE ⑥

*1: Optional for the Y-axis specification.

*2: Standard for the MC type and the Y-axis specification.

*3: Standard for MSD-518 and MSD-501.

*4: Standard for MSC-518, MSD-518, and MSD-518II.

*5: Standard for the SL-S series.

*6: Optional for the MC type and the Y-axis specification.

*7: Standard for the SL and the SL-S series equipped with MC type and Y-axis specification (excludes the SL-400, SL-600, SL-65, and SL-75).

*8: Standard for the Y-axis specification of the SL-S series. Note that the 3rd zero point is used for the retract position of the X- and Y-axes when moving spindle 2 (B-axis) and cannot be used for other purposes.

*9: Not available for the MSC-500.

*10: Standard for the SL-600 series.

*11: Standard for the MSD-501II of SL-S series.

*12: Optional for the SL-25E.

*13: Not available for the VL-25, the LL series and the MSC-500.

*14: Standard for the Y-axis specification.

*15: Optional for MSC-500 and MSC-501.

○: Standard △: Option ×: Not available

Code	Group	Function		Division
G00	01	Positioning		○
G01		Linear interpolation		○
G02		Circular interpolation/helical interpolation, CW (clockwise)		○/×*1
G03		Circular interpolation/helical interpolation, CCW (counterclockwise)		○/×*1
G04	00	Dwell		○
G07.1 (G107)		Cylindrical interpolation		×*2
G10		Data setting		△*3
G11		Data setting mode cancel		△*3
G12.1 (G112)	21	Polar coordinate interpolation mode		×*2
G13.1 (G113)		Polar coordinate interpolation mode cancel		×*2
G17	16	XpYp plane	Xp: X-axis or its parallel axis	○
G18		ZpXp plane	Yp: Y-axis or its parallel axis	○
G19		YpZp plane	Zp: Z-axis or its parallel axis	○
G20	06	Data input in inch system		○
G21		Data input in metric system		○
G22	09	Stored stroke check function ON		△*3
G23		Stored stroke check function OFF		△*3

○: Standard △: Option ×: Not available

Code	Group	Function	Division
G25	08	Spindle speed variation detection OFF	×*4
G26		Spindle speed variation detection ON	×*4
G27	00	Reference point return check	○
G28		Reference point return	○
G30		Second/third, fourth reference point return	○/△*8
G30.1		Floating reference point return	△*9
G31		Skip function/Multi-step skip function	○/△
G32	01	Thread cutting	○
G34		Variable lead thread cutting	△
G35		Circular thread cutting, CW (clockwise)	△*13
G36		Circular thread cutting, CCW (counterclockwise)	△*13
G38	00	Workpiece pushing check	×*5
G40	07	Tool nose radius offset cancel/Cutter radius offset cancel	○/×*14
G41		Tool nose radius offset, left/Cutter radius offset, left	○/×*14
G42		Tool nose radius offset, right/Cutter radius offset, right	○/×*14
G50	00	Coordinate system setting/Spindle speed limit setting	○
G50.2 (G250)	20	Polygon cutting cancel	×*6
G51.2 (G251)		Polygon cutting	×*6
G52	00	Local coordinate system setting	○*12
G53		Machine coordinate system selection	○*12
G54	14	Work coordinate system 1 selection	○*12
G55		Work coordinate system 2 selection	○*12
G56		Work coordinate system 3 selection	○*12
G57		Work coordinate system 4 selection	○*12
G58		Work coordinate system 5 selection	○*12
G59		Work coordinate system 6 selection	○*12
G65	00	Macro call	△*11
G66	12	Macro modal call	△*11
G67		Macro modal call cancel	△*11
G70	00	Finishing cycle	○
G71		O.D./I.D. rough cutting cycle/Pocket cutting	○/○*12
G72		Rough facing cycle/Pocket cutting	○/○*12
G73		Closed-loop cutting cycle	○
G74		Face cut-off cycle, deep hole drilling cycle	○
G75		O.D./I.D. grooving cycle, cut-off cycle	○
G76		Multiple thread cutting cycle/Zigzag infeed mode	○/○*9

○: Standard △ : Option ×: Not available

Code	Group	Function		Division
G80	10	Hole machining canned cycle	Hole machining canned cycle cancel	×*2
G83			Face hole machining cycle	×*2
G84			Face tapping cycle	×*2
G85			Face boring cycle	×*2
G87			Side hole machining cycle	×*2
G88			Side tapping cycle	×*2
G89			Side boring cycle	×*2
G90	01	O.D./I.D. cutting cycle		○
G92		Simple thread cutting cycle		○
G94		Face cutting cycle		○
G96	02	Constant surface speed control		○
G97		Constant spindle speed command		○
G98	05	Feed per minute mode		○
G99		Feed per revolution mode		○
G334		Turning on the tool life data registration mode (Tool life management B function)		△*15
G335		Turning off the tool life data registration mode (Tool life management B function)		△*15
G336		Group command (Tool life management B function)		△*15
G337		Skip command (Tool life management B function)		△*15
G338		State flag clear command (Tool life management B function)		△*15
G339		Tool life management information reading command (Tool life management B function)		△*15
G340		PMC address information reading command (Tool life management B function)		△*15
G380		Synchronized tapping cycle cancel		×*7
G384		Synchronized tapping cycle		×*7
G479		Tailstock connect (only for the SL, TL and CL series)		△*10

2. **G00** Positioning the Cutting Tool at a Rapid Traverse Rate

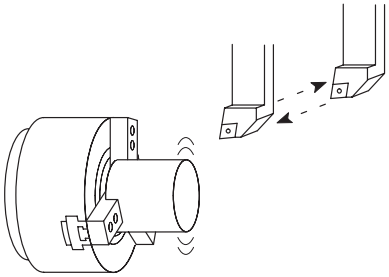

By specifying the G00 command, all axis movement commands are executed at the rapid traverse rate. In other words, the cutting tool is positioned at the programmed target point at a rapid traverse rate.

The G00 mode is usually used for the following operations:

1) At the start of machining:

   To move the cutting tool close to the workpiece.

2) During machining:

   To move the cutting tool, retracted from the workpiece, to the next programmed target point.

CAUTION

When moving the cutting tool at a rapid traverse rate during machining, make sure that there are no obstacles in the tool paths.

3) At the end of machining:

   To move the cutting tool away from the workpiece.

WARNING

When setting the G00 mode approach to the workpiece, determine the approach paths carefully, taking the workpiece shape and cutting allowance into consideration. The approach point in the Z-axis direction should be more than "chucking allowance + 10 mm" away from the workpiece end face.

When the spindle is rotating, centrifugal force acts on the chuck jaws, reducing the chuck gripping force. This can cause the workpiece to come out of the chuck.

Unless the approach point is at least "chucking allowance + 10 mm" away from the workpiece end face, the cutting tool could strike the workpiece while moving at the rapid traverse rate if the workpiece does come out of the chuck, or if there is a large amount of material to be removed. This could cause accidents involving serious injuries or damage to the machine.

COMMAND

G00 X(U)_ Z(W)_ ;

- G00 . . . . . Calls positioning at a rapid traverse rate.
- X, Z . . . . . Specifies the positioning target point at a rapid traverse rate.
  The coordinates are specified in absolute values.
- U, W . . . . . Specifies the positioning target point.
  The coordinates are specified in incremental values in reference to the present position.

CAUTION

① If X- and Z-axis movements are specified in the same block in the G00 mode, the tool path is not always a straight line from the present position to the programmed end point. Make sure that there are no obstacles in the tool path, remembering that X- and Z-axis movement is at the rapid traverse rate. If the workpiece, fixture or tailstock (if featured) lies in the tool path, it could interfere with the tool, tool holder, or turret head. Depending on the workpiece holding method, there could also be interference with the chuck and chuck jaws. This interference will damage the machine.

Page B–9

② For center-work, move the Z-axis first and then the X-axis to position the cutting tool at the approach point.

In the cutting tool retraction operation, retract the cutting tool in the X-axis direction first to a point where continuing cutting tool movement does not result in interference with the tailstock. After that, move the Z-axis to the required retraction position. (Applies only to machines equipped with a tailstock.)

Page B–9

NOTE

① Once the G00 command is specified, it remains valid until another G code in the same group is specified. G01, G02, and G03 are examples of G codes which belong to the same group.

G codes which remain valid until another G code in the same group is specified are called modal G codes.

For the G code groups, refer to page B–1 (1.).

② The maximum rapid traverse rate varies among the machine models.

Page D–25 (3.4)

③ The rapid traverse rate is adjustable by using the rapid traverse rate override switch on the machine operation panel.

④ If the rapid traverse rate override switch is set to “0” during automatic operation, the programmed rapid traverse is not executed and the operation enters the feed hold mode.

⑤ In a block where a T code is specified, G00 should be specified.

This G00 command is necessary to determine the cutting tool movement feedrate to execute offset motion.

⑥ With the SL-400 and SL-600 series machines, if a T code is specified with G00 in the same block, the direction of the axis movement is automatically judged whether it is away from or toward the workpiece from the remaining axis movement distance. If the axis is going to move toward the workpiece, the machine stops with an alarm message (No. 1320) displayed on the screen.

Ex. **Programming using G00**

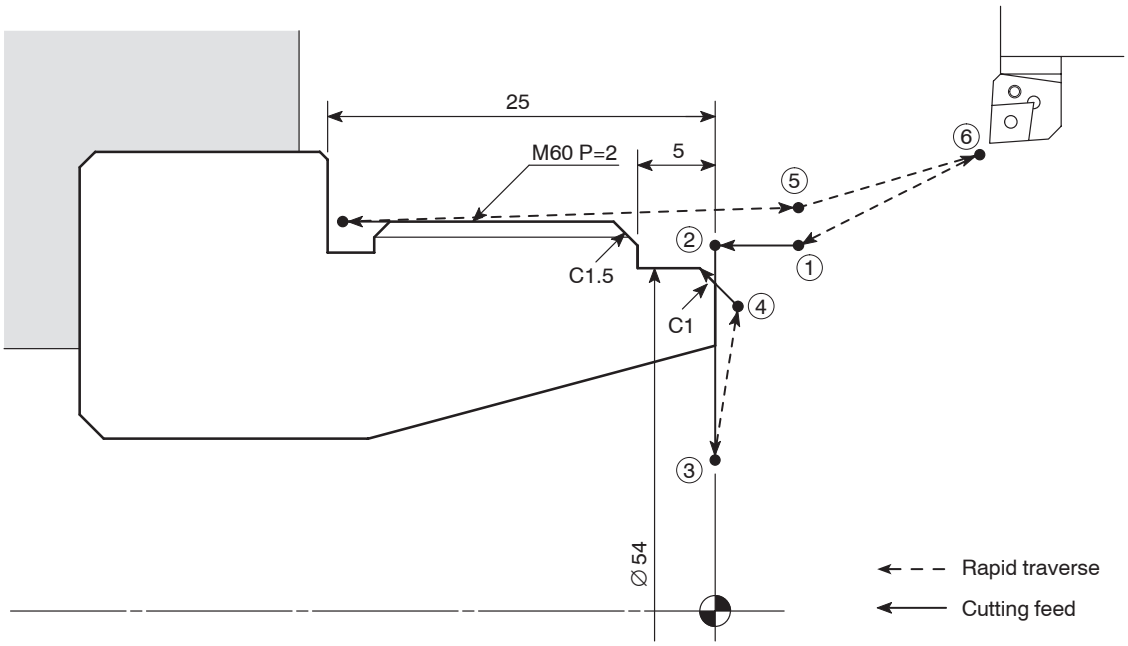

O0001;
N1;
G50 S2000;
G00 T0101;
G96 S200 M03;
X56.0 Z20.0 M08; . . . . . Positioning at ① at a rapid traverse rate to move the cutting tool close to the workpiece
G01 Z0 F1.0; . . . . . Positioning at ② at a cutting feedrate, the start point of facing
X30.0 F0.15;
G00 X50.0 W1.0; . . . . . Positioning from ③ to ④ at a rapid traverse rate to execute O.D. cutting
G01 X54.0 Z–1.0;
Z–5.0;
X56.8;
X59.8 Z–6.5;
Z–23.0 F0.2;
G00 U1.0 Z20.0; . . . . . Positioning at ⑤ to move the cutting tool away from the workpiece at a rapid traverse rate
X200.0 Z150.0 M09; . . . . . Positioning at ⑥ where the turret head can be rotated
M01;

The G00 mode is used to move the cutting tool close to and away from the workpiece.

CAUTION

If X- and Z-axis movements are specified in the same block in the G00 mode, the tool path is not always a straight line from the present position to the programmed end point. Make sure that there are no obstacles in the tool path, remembering that X- and Z-axis movement is at the rapid traverse rate. If the workpiece, fixture or tailstock (if featured) lies in the tool path, it could interfere with the tool, tool holder, or turret head. Depending on the workpiece holding method, there could also be interference with the chuck and chuck jaws. This interference will damage the machine.

G00 X(U)_ Z(W)_ ;

If the rapid traverse rates of X-axis and Z-axis are:

X-axis 18000 mm/min

Z-axis 24000 mm/min

The tool path generated by the simultaneous movement of the two axes in the G00 mode is shown in the illustration.

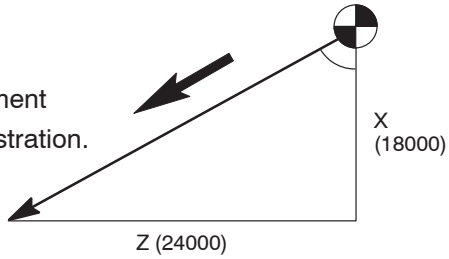

Therefore, the tool paths are generated as illustrated below depending on the positional relationship between the start and target points.

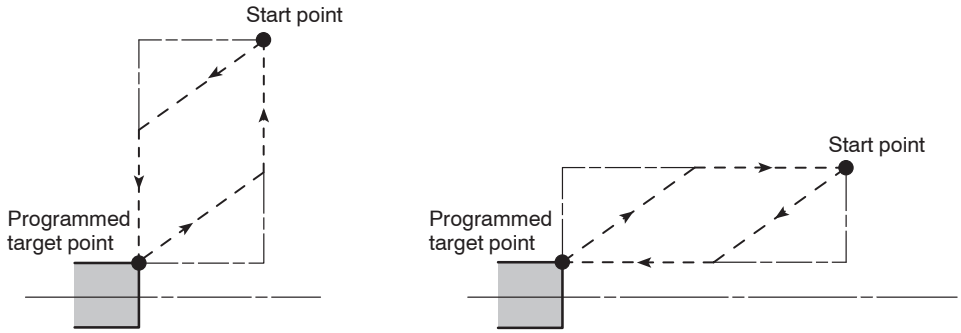

CAUTION

For center-work, move the Z-axis first and then the X-axis to position the cutting tool at the approach point.

In the cutting tool retraction operation, retract the cutting tool in the X-axis direction first to a point where continuing cutting tool movement does not result in interference with the tailstock. After that, move the Z-axis to the required retraction position. (Applies only to machines equipped with a tailstock.)

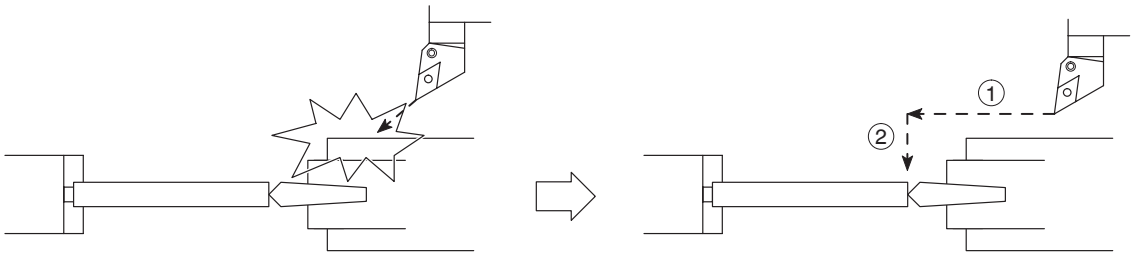

3. **G01** Moving the Cutting Tool Along a Straight Path at a Cutting Feedrate

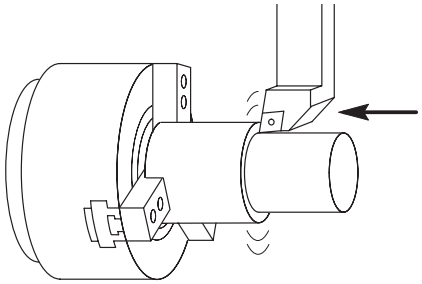

By specifying the G01 command, the cutting tool is moved along a straight line to cut a workpiece.

The feedrate is specified with an F code by the distance the cutting tool should be moved while the spindle rotates one turn, or the distance to be moved in a minute.

COMMAND

G01 X(U)_ Z(W)_ F_ ;

- G01 . . . . . Calls the linear interpolation mode.
- X, Z . . . . . Specifies the cutting target point.

  The coordinates are specified in absolute values.
- U, W . . . . . Specifies the cutting target point (distance and direction).

  The coordinates are specified in incremental values in reference to the present position.
- F . . . . . Specifies the feedrate in ordinary control
  - In the G99 mode, the feedrate is specified in “mm/rev”.

    F0.2 . . . . . 0.2 mm/rev
  - In the G98 mode, the feedrate is specified in “mm/min”.

    F200 . . . . . 200 mm/min

NOTE

① Once the G01 command is specified, it remains valid until another G code in the same group is specified. G00, G02, and G03 are examples of G codes which belong to the same group.

G codes which remain valid until another G code in the same group is specified are called modal G codes.

For the G code groups, refer to page B–1 (1.).

② The cutting feedrate is adjustable by using the feedrate override switch on the machine operation panel in the range of 0 to 150%.

③ The feedrate data is “0” until an F code is specified.

If an axis movement command is read before an F code is specified, the machine does not operate. In this case, an alarm message (No. 011) is displayed on the screen.

④ When the power is turned on, the NC is in the G99 (feed per revolution) mode.

Ex. **Programming using G01**

To move the cutting tool at a cutting feedrate along the paths ② → ③, and ④ → ⑤ → ⑥ → ⑦ → ⑧ → ⑨.

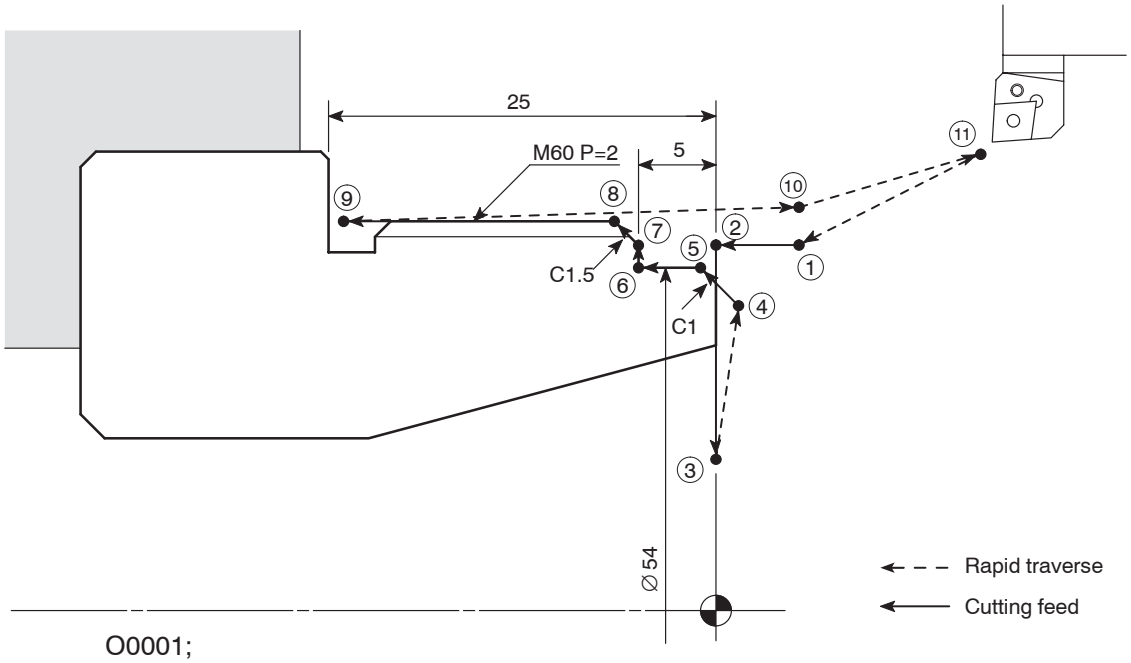


```
O0001;
N1;
G50 S2000;
G00 T0101;
G96 S200 M03;
X56.0 Z20.0 M08; ..... Positioning at ① at a rapid traverse rate to move
                       the cutting tool close to the workpiece
G01 Z0 F1.0; ..... Positioning at ② at a cutting feedrate, the start
                   point of facing
X30.0 F0.15; ..... Facing at a feedrate of 0.15 mm/rev
G00 X50.0 W1.0; ..... Positioning from ③ to ④ at a rapid traverse
                      rate, the start point of O.D. machining at a rapid
                      traverse rate
G01 X54.0 Z–1.0; ..... Cutting along path ④ → ⑤ at a feedrate of
                       0.15 mm/rev
Z–5.0; ..... Cutting along path ⑤ → ⑥ at a feedrate of
             0.15 mm/rev
X56.8; ..... Cutting along path ⑥ → ⑦ at a feedrate of
            0.15 mm/rev
X59.8 Z–6.5; ..... Cutting along path ⑦ → ⑧ at a feedrate of
                   0.15 mm/rev
Z–23.0 F0.2; ..... Cutting along path ⑧ → ⑨ at a feedrate of
                   0.2 mm/rev
G00 U1.0 Z20.0; ..... Positioning at ⑩ at a rapid traverse rate to move
                      the cutting tool away from the workpiece
X200.0 Z150.0 M09; ..... Positioning at ⑪ where the turret head can be
                         rotated
M01;
```

4. G02, G03 Moving the Cutting Tool Along Arcs at a Cutting Feedrate

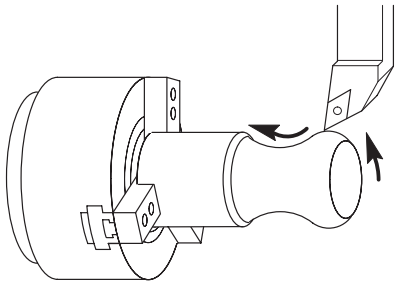

By specifying the G02, G03 command, the cutting tool is moved along an arc to cut a workpiece.

COMMAND

G02(G03) X(U)_ Z(W)_ R_ F_ ;
G02(G03) X(U)_ Z(W)_ I_ K_ F_ ;

- G02 . . . . . Calls the circular interpolation mode in the clockwise direction.
- G03 . . . . . Calls the circular interpolation mode in the counterclockwise direction.
- X, Z . . . . . Specifies the end point of the arc. The coordinates are specified in absolute values.
- U, W . . . . . Specifies the end point of the arc (distance and direction). The coordinates are specified in incremental values in reference to the present position.
- R . . . . . Specifies the radius of the arc.
- I . . . . . Specifies the distance and the direction from the start point of the arc to the center of the circle in the X-axis direction. The value should be specified as a radius.
- K . . . . . Specifies the distance and the direction from the start point of the arc to the center of the circle in the Z-axis direction.
- F . . . . . Specifies the feedrate in ordinary control
  - In the G99 mode, the feedrate is specified in “mm/rev”.
    F0.2 . . . . . 0.2 mm/rev
  - In the G98 mode, the feedrate is specified in “mm/min”.
    F200 . . . . . 200 mm/min

NOTE

① If an R command and a pair of I and K commands are specified in the same block, the R command is given priority and the I and K commands are ignored.

② For the arc whose central angle is larger than 180°, an R command cannot be used.

In this case, use I and K commands to define the arc.

③ When I and K commands are used to specify the distance and direction to the center of an arc while X and Z commands are omitted or the start and end points lie at the same position, a full circle (360°) is defined. If an R command is used instead of I and K commands, no axis movement results.

④ To cut a half-circle accurately or to accurately define the center of an arc of which the center angle is close to 180°, use I and K commands instead of an R command.

If an R command is used, there are cases that the center of a half-circle or an arc of which the center angle is close to 180° cannot be set accurately due to calculation error.

Ex. Programming using G02 or G03

To move the cutting tool at a cutting feedrate along the arc ② → ③.

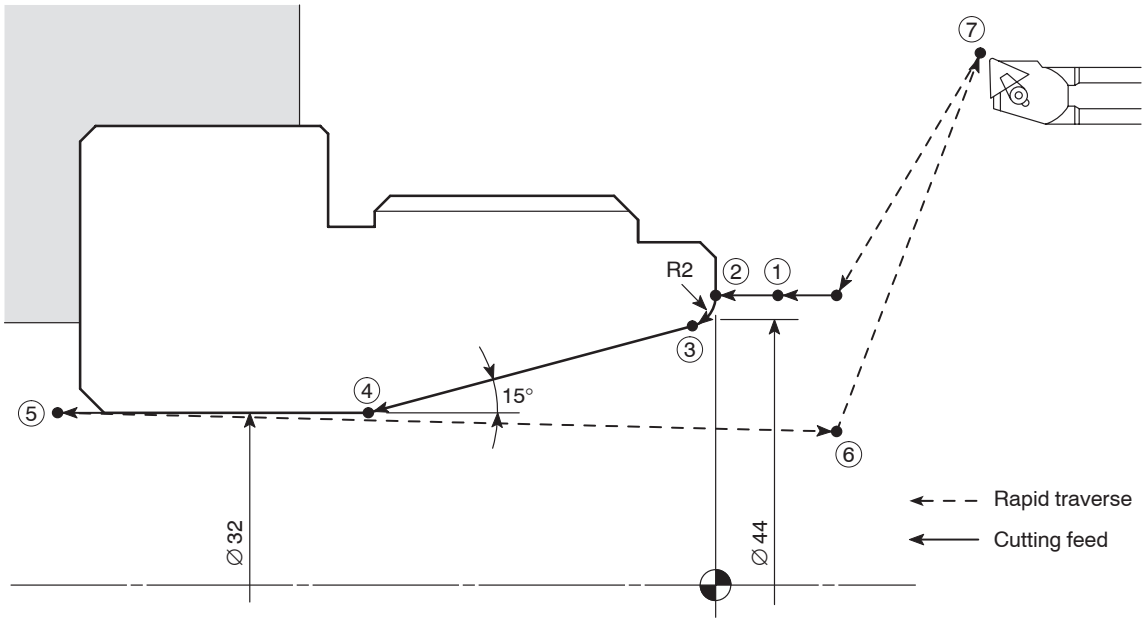


```
O0001;
N1;
G50 S2000;
G00 T0101;
G96 S200 M03;
X47.069 Z20.0 M08;
G01 Z1.0 F1.0; ..... Positioning at ① to move the cutting tool close to
                     the workpiece
Z0 F0.2; ..... Positioning at ② at a feedrate of 0.2 mm/rev
G02 X43.205 Z–1.482 R2.0 F0.07; ... Cutting an arc of 2 mm radius in the clockwise
                     direction at a feedrate of 0.07 mm/rev
G01 X32.0 Z–22.392; ..... Cutting along path ③ → ④ at a feedrate of
                     0.07 mm/rev
Z–41.0 F0.1; ..... Cutting along path ④ → ⑤ at a feedrate of
                     0.1 mm/rev
G00 U–1.0 Z20.0; ..... Positioning at ⑥ at a rapid traverse rate to move
                     the cutting tool away from the workpiece
X200.0 Z150.0 M09; ..... Positioning at ⑦where the turret head can be
                     rotated
M01;
```

5. **G50** Setting the Spindle Speed Limit

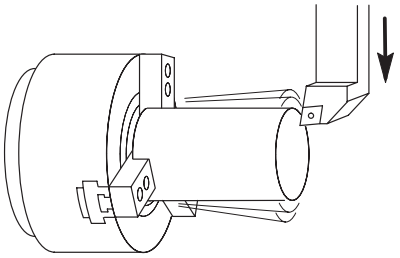

The spindle speed limit for an automatic operation is set with the G50 command.

If the programmed spindle speed is faster than the limit value set in the G50 block, actual spindle speed is clamped at the set limit speed.

WARNING

① **The spindle speed limit set using G50 must be no higher than the lowest of the individual allowable speed limits for the chuck, fixture, and cylinder. If you set a higher speed the workpiece will fly out of the machine, causing serious injuries or damage to the machine.**

② **In the G96 (constant surface speed control) mode, the spindle speed increases as the cutting tool approaches the center of the spindle.**

Near the center of the spindle, the spindle speed will reach the allowable maximum speed of the machine. At this speed, the chuck gripping force, cutting force, and centrifugal force cannot be balanced to hold the workpiece securely in the chuck. As a result, the workpiece will fly out of the machine, causing serious injuries or damage to the machine.

The spindle speed limit must always be specified in a part program by using the G50 command in a block preceding the G96 block, in order to clamp the spindle speed at the specified speed.

COMMAND

G50 S_ ;

- G50 . . . . . Calls the mode to specify the spindle speed limit for automatic operation.
- S . . . . . Specifies spindle speed limit (min^{-1}).

WARNING

① The setting of the spindle speed override switch (if there is one) is valid even when a spindle speed limit is set using G50.

If the switch is set to 110% or 120%, for example, the programmed spindle speed will be overridden in accordance with this setting. If this causes the actual spindle speed to exceed the allowable speed of the chuck, fixture, or cylinder, the workpiece will fly out of the chuck during machining, causing serious injuries or damage to the machine.

Therefore, the spindle speed override switch must be set at 100% or lower.

② When a G97 speed command is used in a program, specification of the maximum speed with a G50 command will be ignored. Therefore, when specifying the spindle speed with a G97 command, specify a speed no higher than the lowest speed among the allowable speed limits for the chuck, fixture, and cylinder. If you set a higher speed the workpiece will fly out of the machine, causing serious injuries or damage to the machine.

NOTE

An alarm message (No. 245) is displayed on the screen if a T command is specified in the G50 block.

Ex. **Programming using G50 (Setting the spindle speed limit)**

To move the cutting tool at a cutting feedrate along the path ② → ③ to execute facing.

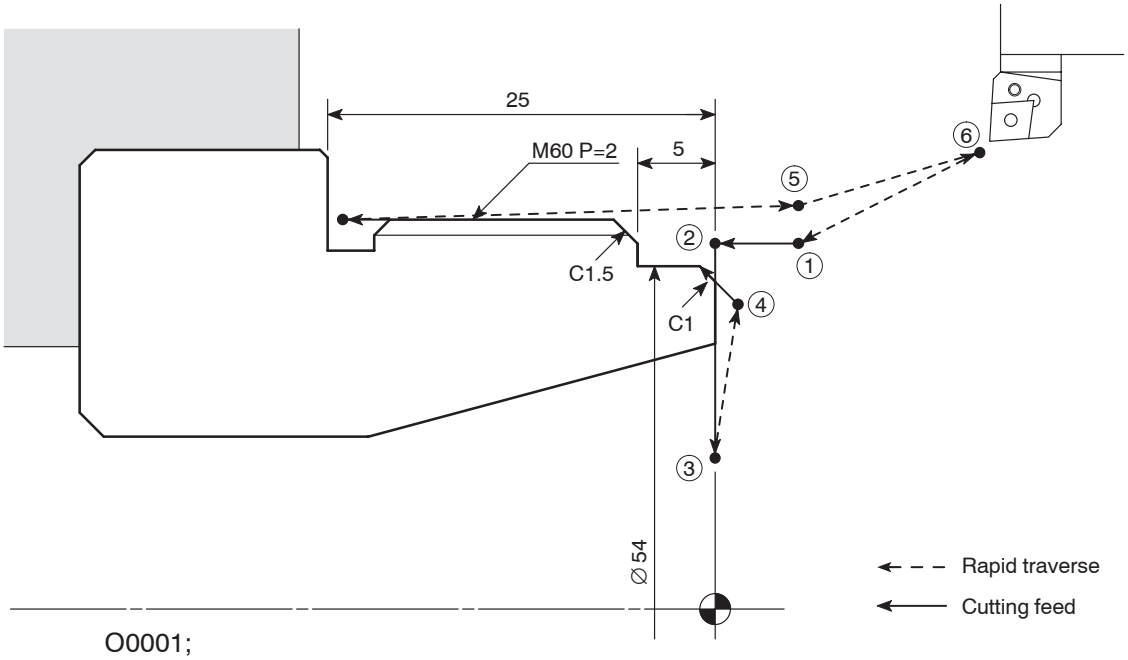


```
O0001;
N1;
G50 S2000; ..... Setting the spindle speed limit for automatic
                 operation at 2000 min–1
G00 T0101;
G96 S200 M03; ..... Starting the spindle or spindle 1 in the normal
                    direction; surface speed is 200 m/min
                    The spindle speed is controlled to maintain the
                    surface speed constant at 200 m/min.
X56.0 Z20.0 M08; ..... Positioning at ① at a rapid traverse rate to move
                       the cutting tool close to the workpiece
G01 Z0 F1.0; ..... Positioning at ② at a cutting feedrate, the start
                   point of facing
X30.0 F0.15; ..... Facing at a feedrate of 0.15 mm/rev
                   In order to maintain the surface speed constant,
                   the spindle speed increases as the cutting tool
                   moves closer to the workpiece center to reach the
                   allowable maximum speed of the machine.
                   However, since spindle speed limit is set at
                   2000 min–1 in the "G50 S2000", the spindle speed
                   does not exceed this limit value.
G00 X50.0 W1.0;
G01 X54.0 Z–1.0;
    ⋮
    ⋮          Machining program
    ⋮
G00 U1.0 Z20.0;
X200.0 Z150.0 M09;
M01;
```

6. G96 Controlling Spindle Speed to Maintain Surface Speed Constant

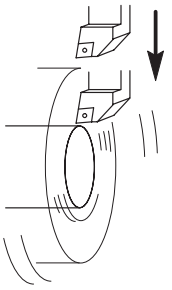

The G96 command is used to maintain surface speed constant at the specified value.

The surface speed is also called the cutting speed. It indicates the distance the cutting tool moves along the workpiece surface (periphery) per minute.

When the surface speed is specified with the G96 command, the spindle speed is automatically controlled to maintain the surface speed constant as the cutting diameter varies. This mode is used to maintain the cutting conditions constant.

For example, if the cutting speed (V) is specified at 100 m/min to cut a 30 mm diameter (D) workpiece, the spindle speed (N) is calculated as indicated below.

$$N = \frac{1000V}{\pi \cdot D}$$

$$N = \frac{1000 \times 100}{3.14 \times 30}$$

$$\fallingdotseq 1061 \text{ min}^{-1}$$

Therefore, the spindle rotates at 1061 min^{-1}.

Generally, the standard cutting speed is determined according to the material of the workpiece and the cutting tool, the workpiece shape, and the chucking method.

COMMAND

G96 S_ M03(M04);

- G96 . . . . . Calls the constant surface speed control mode.
- S . . . . . Specifies the cutting speed (m/min).
- M03(M04) . . . . Specifies spindle or spindle 1 rotation in the normal (reverse) direction.

WARNING

In the G96 (constant surface speed control) mode, the spindle speed increases as the cutting tool approaches the center of the spindle.

Near the center of the spindle, the spindle speed will reach the allowable maximum speed of the machine. At this speed, the chuck gripping force, cutting force, and centrifugal force cannot be balanced to hold the workpiece securely in the chuck. As a result, the workpiece will fly out of the machine, causing serious injuries or damage to the machine.

The spindle speed limit must always be specified in a part program by using the G50 command in a block preceding the G96 block, in order to clamp the spindle speed at the specified speed.

Ex. **Programming using G96**

To move the cutting tool at a cutting feedrate along the path ② → ③ to execute facing.

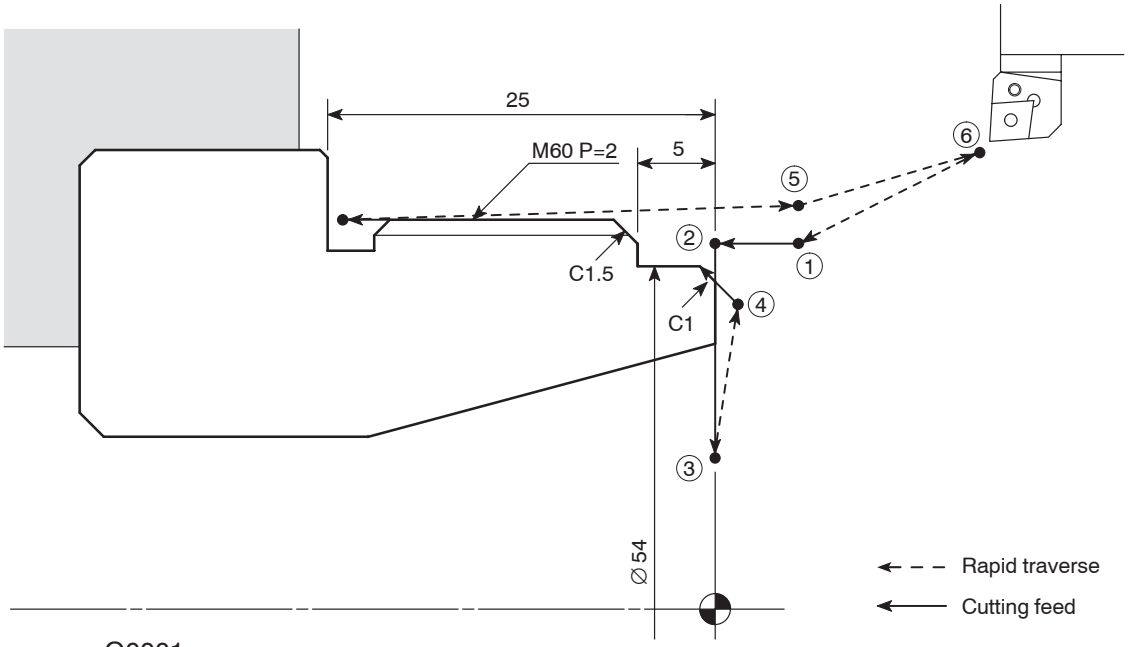

O0001;

N1;

G50 S2000; . . . . . Setting the spindle speed limit for automatic operation at 2000 min^{-1}

G00 T0101;

G96 S200 M03; . . . . . Starting the spindle or spindle 1 in the normal direction; surface speed is 200 m/min

The spindle speed is controlled to maintain the surface speed constant at 200 m/min.

X56.0 Z20.0 M08; . . . . . Positioning at ① at a rapid traverse rate to move the cutting tool close to the workpiece

$$N = \frac{1000V}{\pi \cdot D} = \frac{1000 \times 200}{3.14 \times 56} \fallingdotseq 1137 \ (min^{-1})$$

At this position, the spindle or spindle 1 rotates at 1137 min^{-1} in the normal direction.

G01 Z0 F1.0;

X30.0 F0.15; . . . . . Facing at a feedrate of 0.15 mm/rev

$$N = \frac{1000V}{\pi \cdot D} = \frac{1000 \times 200}{3.14 \times 30} \fallingdotseq 2123 \ (min^{-1})$$

At this position, the spindle or spindle 1 should rotate at 2123 min^{-1} to provide the surface speed of 200 m/min. However, since the spindle speed limit of 2000 min^{-1} is set in the “G50 S2000”, the spindle speed does not exceed this limit value.

G00 X50.0 W1.0;

G01 X54.0 Z–1.0;

⋮ Machining program

G00 U1.0 Z20.0;

X200.0 Z150.0 M09;

M01;

7. **G97** Controlling Spindle Speed at Constant Speed

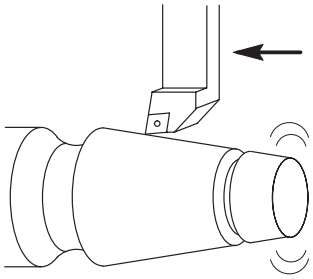

The G97 command is used to call the mode in which a constant spindle speed is maintained.

During automatic operation, the spindle rotates at the programmed speed.

$$N = \frac{1000V}{\pi \cdot D}$$

N: Spindle speed (min^{-1})

V: Cutting speed (m/min)

D: Cutting diameter (mm)

π: Circumference constant

The G97 command must be specified for thread cutting operation and turning drilling operation at the center of workpiece end face.

NOTE During thread cutting operation, the thread is cut gradually by changing the cutting diameter for each thread cutting path while maintaining the start point of the thread. Therefore, if the spindle speed is not kept constant, the start point shifts in each thread cutting cycle making thread cutting impossible or tipping the tool nose.

The G97 mode is also specified for carrying out copy turning on straight bar workpiece.

COMMAND

G97 S_ M03(M04);

- G97 . . . . . Calls the constant spindle speed command mode.
- S . . . . . Specifies the spindle speed (min^{-1}).
- M03(M04) . . . . Specifies spindle or spindle 1 rotation in the normal (reverse) direction.

WARNING

When a G97 speed command is used in a program, specification of the maximum speed with a G50 command will be ignored. Therefore, when specifying the spindle speed with a G97 command, specify a speed no higher than the lowest speed among the allowable speed limits for the chuck, fixture, and cylinder. If you set a higher speed the workpiece will fly out of the machine, causing serious injuries or damage to the machine.

NOTE

When the spindle speed control mode is switched from the G96 mode to the G97 mode, if no spindle speed is specified in the G97 block, the spindle speed obtained in the block immediately preceding the G97 block is used as the spindle speed for the G97 mode operation.

Therefore, if no spindle speed is specified in the G97 block, the spindle speed for the G97 mode will depend on the position of the cutting tool in the block preceding the G97 block, and this could adversely affect machining accuracy and shorten the life of the tool.

When switching the spindle speed control mode to the G97 mode, always specify a spindle speed.

Ex. **Programming using G97**

To execute O.D. thread cutting

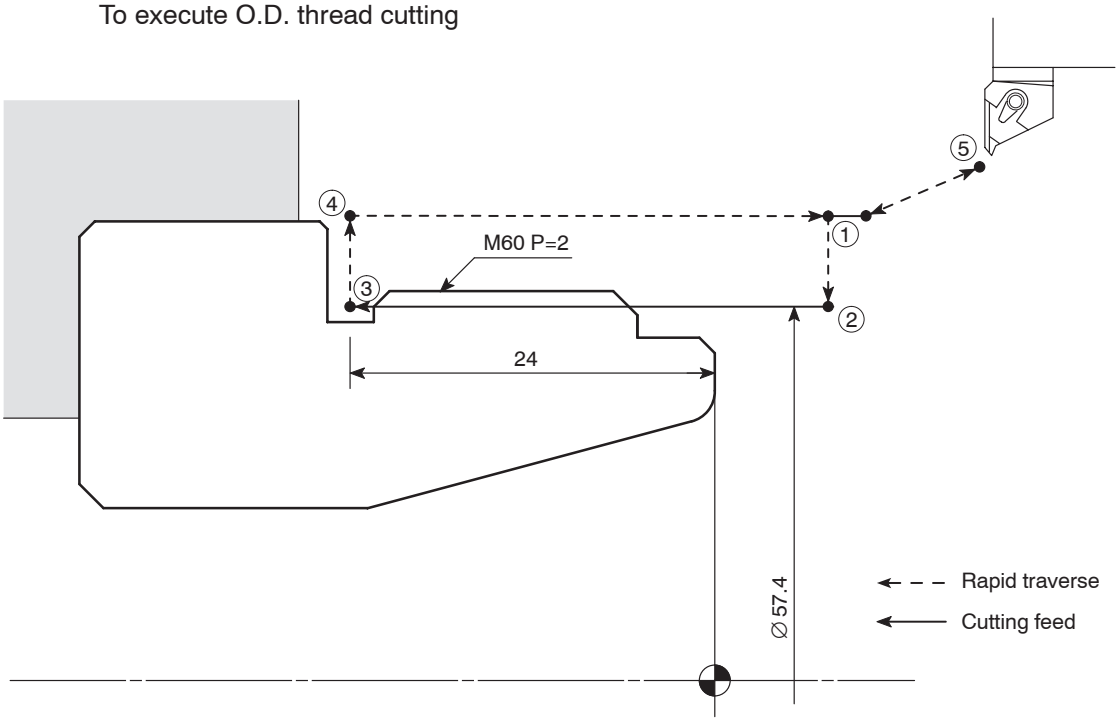


```
O0001;
N1;
G00 T0101;
G97 S640 M03; ..... Starting the spindle or spindle 1 at 640 min–1 in the
                     normal direction
X70.0 Z20.0 M08;
G01 Z5.0 F1.0 M24; ..... Positioning at ①, the start point of the G92 thread
                         cutting cycle.
G92 X59.4 Z–24.0 F2.0;
X58.9;
X58.5;
X58.1;                  ..... Execution of the G92 thread cutting cycle
X57.8;                         ( ① → ② → ③ → ④ → ① )
X57.56;
X57.36;
X57.26;
G00 X200.0 Z150.0 M09; ..... Positioning at ⑤ where the turret head can be
                             rotated
M05;
M30;
```

8. **G04** Suspending Program Execution (Dwell)

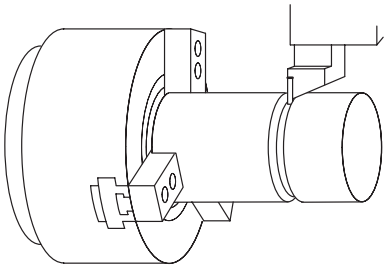

The G04 command is used to suspend program execution during automatic operation for the period specified in the program.

This function is called the dwell function, and is used in operation such as the grooving operation.

If dwell is specified at the bottom of the groove, the tool stops moving. The spindle keeps rotating while the tool stays at the bottom of the groove.

By rotating the spindle one turn while locating the tool at the bottom of the groove, the groove profile accuracy is improved and uncut portion is eliminated. The dwell function is also used for opening and closing the chuck when the machine is equipped with the air blow, the bar feeder or the loader.

NOTE When executing a dwell using the G04 command, if the cutting tool is kept in contact with the workpiece at a position such as the bottom of a groove for a long time it will shorten the life of the tool nose as well as adversely affecting machining accuracy.

COMMAND

G04 X_ ;
G04 U_ ;
G04 P_ ;

- G04 . . . . . Calls the dwell function.
- X, U . . . . . Specifies the period in which the program execution is suspended. The dwell period should be specified in units of seconds with a decimal point.

  X1.0 (U1.0) . . . 1 sec

  X1 (U1) . . . . . 0.001 sec
- P . . . . . Specifies the period in which the program execution is suspended. The dwell period should be specified in units of 0.001 second without a decimal point.

  P1000 . . . . . 1 sec

NOTE
① A decimal point cannot be used when address P is used.

Dwell for 1.5 seconds G04 P1500;

Dwell for 2.3 seconds G04 P2300;

② Programmable dwell period is 0.001 to 99999.999 seconds.

③ The dwell function is valid only in the specified block.

④ Dwell period per revolution of the spindle is calculated as follows:

$$t\ (\text{sec}) = \frac{60\ (\text{sec})}{\text{Spindle speed}\ (\text{min}^{-1})}$$

⑤ An alarm message (No. 245) is displayed on the screen if a T command is specified in the G04 block.

Ex. **Programming using G04**

To cut a 3 mm wide groove.

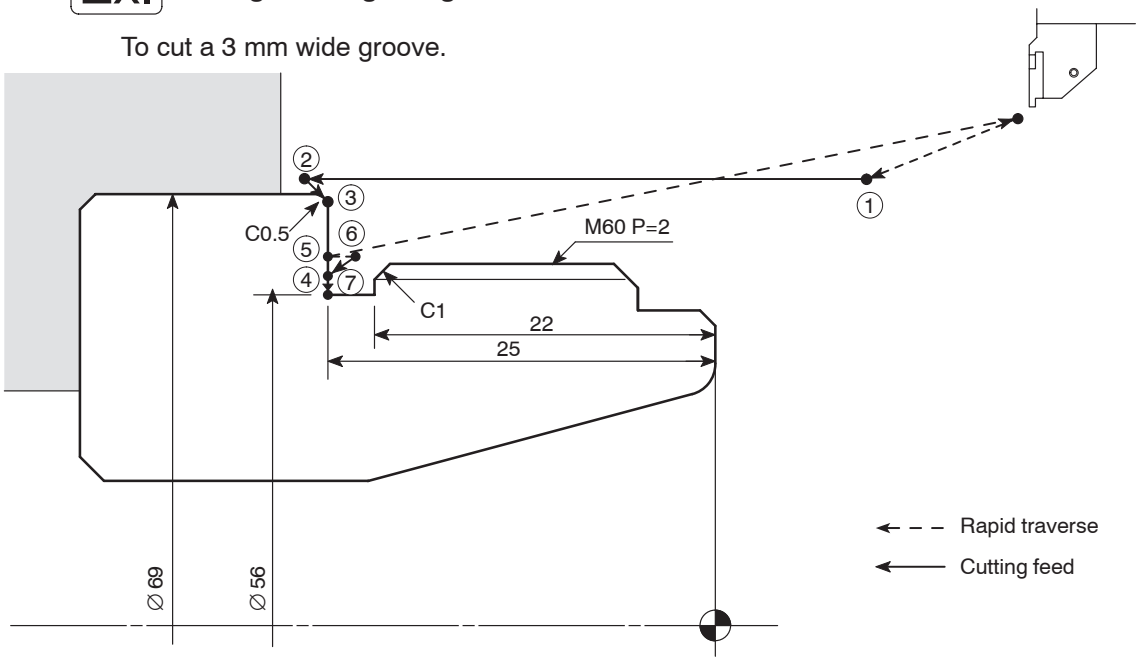


```
O0001;
N1;
G50 S1500; ..... Setting the spindle speed limit at 1500 min−1 for
                 automatic operation to ensure safety
G00 T0101;
G96 S100 M03; ..... Starting the spindle or spindle 1 in the normal
                    direction at cutting speed of 100 m/min
X70.0 Z20.0 M08; ..... Positioning at ① to move the cutting tool close to
                       the workpiece at a rapid traverse rate
G01 Z–26.0 F1.0; ..... Positioning at ②, the start point of grooving at a
                       cutting feedrate
X68.0 Z–25.0 F0.07; ..... Cutting along path ② → ③ at a feedrate of
                          0.07 mm/rev
X56.0 F0.1; ..... Cutting along path ③ → ④ at a feedrate of
                  0.1 mm/rev
G04 U0.2; ..... Suspending program execution for 0.2 seconds at
                the bottom of the groove to allow spindle to rotate
                one turn
```

Spindle speed at ④

$$N = \frac{1000V}{\pi \cdot D} = \frac{1000 \times 100}{3.14 \times 56} \fallingdotseq 569 \ (\text{min}^{-1})$$

$$\text{Period required for the spindle to rotate one turn} = \frac{60}{569} \fallingdotseq 0.11 \ (\text{sec})$$

To suspend program execution at the groove bottom for more than one turn of the spindle, dwell period is determined to 0.2 seconds.

The following program may be used instead of “G04 U0.2;”
G04 X0.2; or G04 P200;

```
G00 X60.8
 ⋮          Machining program
M01;
```

9. **G98, G99** Setting Feedrate Units

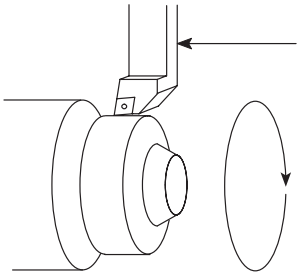

Axis feedrate units are determined by specifying the following two G codes:

G98

The G98 command calls the mode in which axis feedrates specified by F codes are interpreted in units of mm per minute. This mode is used when the bar feeder, the pull-out finger, or the rotary tool is used.

G99

The G99 command calls the mode in which the axis feedrates specified by F codes are interpreted in units of mm per revolution.

This mode is used for general turning operations such as O.D. cutting, I.D. cutting, and thread cutting.

CAUTION

In the G98 mode, the turret moves at the feedrate specified by the F code even when the spindle is not rotating. Make sure that the cutting tool will not strike the workpiece, etc., since this could damage the machine.

G98;

G01 Z_ F100.0; .... The cutting tool moves at a rate of 100 mm/min even when the spindle is not rotating.

COMMAND

G98; ..... Specifies the feedrate per minute (mm/min)

G99; ..... Specifies the feedrate per revolution (mm/rev)

NOTE

① The G98 and G99 commands are modal.

Therefore, once the G98 command is specified, it remains valid until the G99 command is specified, or vice versa.

② When the power is turned on, the G99 mode (feedrate per revolution) is set.

Ex. **Programming using G99**

To execute O.D. cutting in the G99 mode

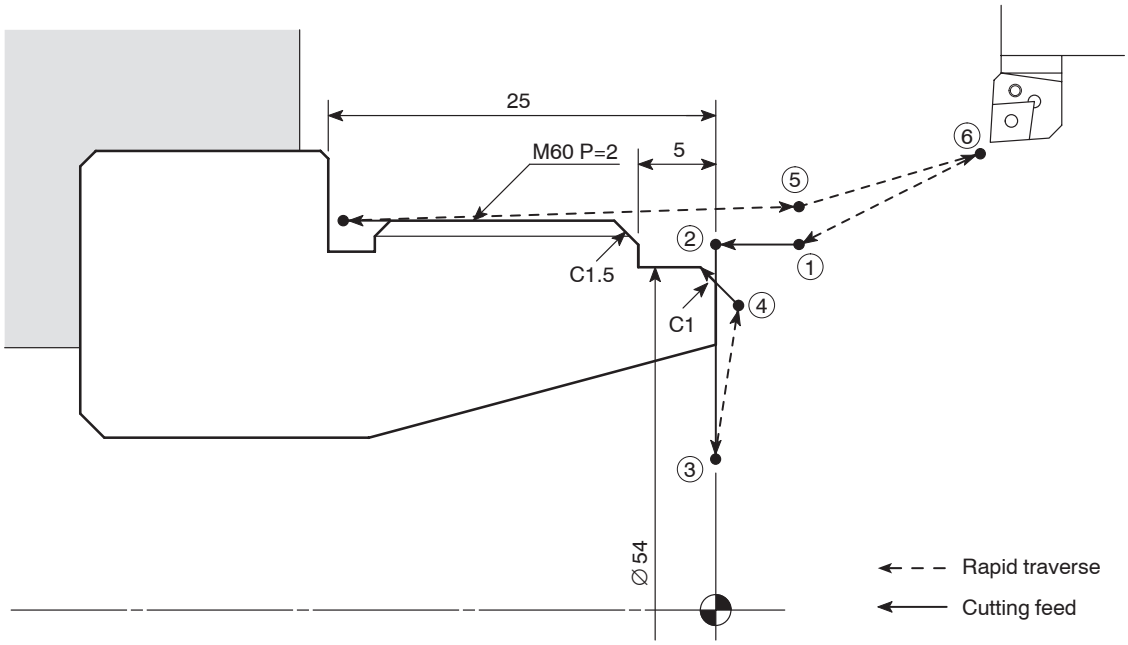

O0001;
N1;
(G99;) . . . . . Since the G99 command is specified, the F codes are interpreted in units of “mm/rev”.

G50 S2000;
G00 T0101;
G96 S200 M03;
X56.0 Z20.0 M08;
G01 Z0 F1.0;
X30.0 F0.15;
G00 X50.0 W1.0;
G01 X54.0 Z–1.0;
Z–5.0;
X56.8;
X59.8 Z–6.5;
Z–23.0 F0.2;
G00 U1.0 Z20.0;
X200.0 Z150.0 M09;
M01;

Ex. **Programming using G98**

To use the pull-out finger for bar machining operation in the G98 mode

CAUTION

Always specify an M05 command to stop spindle rotation before using a pull-out finger or workpiece pusher, etc. If spindle rotation is not stopped the machine could be damaged.

The workpiece is pulled out of the chuck with the pull-out finger mounted in the turret head while the spindle rotation is stopped.

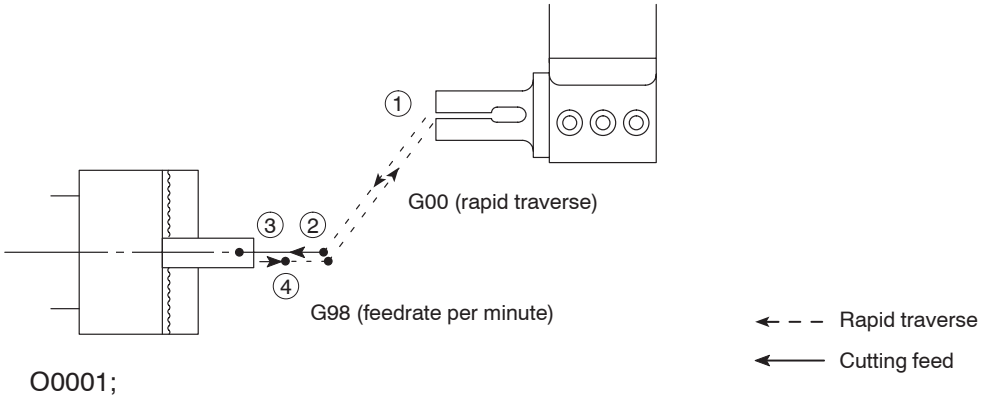

O0001;
N1;
G00 T0101 **M05;**

X0 Z20.0 M09; . . . . . Positioning at ② at a rapid traverse rate to grip the workpiece

G98; . . . . . Establishing the “mm/min” mode

In the following blocks, the F codes are all interpreted in the unit of “mm/min”.

G01 Z–60.0 F500; . . . . . Positioning at ③ at 500 mm/min to grip the workpiece (bar stock)

M11; . . . . . Unclamping of the chuck

G04 U2.0; . . . . . Dwell for 2 seconds to ensure unclamping of the chuck

NOTE The dwell period should be a little longer than the time required for the chuck to operate (open, close) to ensure safe operation.

Z–10.0; . . . . . Moving to ④ at 500 mm/min to pull out the bar stock from the chuck

M10; . . . . . Clamping of the chuck

G04 U2.0; . . . . . Dwell for 2 seconds to ensure clamping of the chuck

NOTE The dwell period should be a little longer than the time required for the chuck to operate (open, close) to ensure safe operation.

G00 Z20.0; . . . . . Positioning at ② at a rapid traverse rate to release the bar stock from the pull-out finger

X200.0 Z50.0; . . . . . Positioning at ① where the turret head can be rotated

G99; . . . . . Selecting the G99 (mm/rev) mode

In the following blocks, the F codes are all interpreted in the unit of “mm/rev”.

M01

N2;

(G99;)

G00 T0202;

G96 S120 M03;

⋮

⋮ Machining program

⋮

10. **G40, G41, G42** Automatic Tool Nose Radius Offset

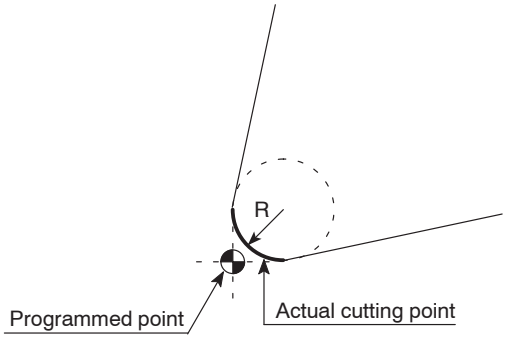

R: Tool nose radius

The tool nose does not have a sharp edge but is rounded as illustrated on the left. Therefore, the point of the tool nose used for programming is offset from the actual cutting point. The tool nose radius offset function is used to eliminate dimensional errors caused by this difference.

If taper or arc cutting is programmed without taking into consideration the tool nose radius, overcut or undercut will occur.

The G41 and G42 commands are specified in a program to automatically eliminate this overcut or undercut by offsetting for the tool nose radius.

For details on the automatic tool nose radius offset (G40, G41 and G42), refer to Chapter E, “AUTOMATIC TOOL NOSE RADIUS OFFSET”.

COMMAND

G01(G00) G41 X_ Z_ F_ ;
G01(G00) G42 X_ Z_ F_ ;
G01(G00) G40 X_ Z_ I_ K_ F_ ;

- G01(G00) . . . . Calls the interpolation mode in which the tool nose radius offset function is specified.
  G00 . . Rapid traverse
  G01 . . Cutting feed
- G41 . . . . . Calls the tool nose radius offset (left) function.
  The tool position is offset to the left in reference to the tool advancing direction.
- G42 . . . . . Calls the tool nose radius offset (right) function.
  The tool position is offset to the right in reference to the tool advancing direction.
- G40 . . . . . Cancels the tool nose radius offset function.
- X, Z . . . . . Specifies the coordinate values of the end point.
- I, K . . . . . The direction of the workpiece shape defined in the following block. The I and K commands are specified in incremental values (I: in radius).
- F . . . . . Specifies the feedrate

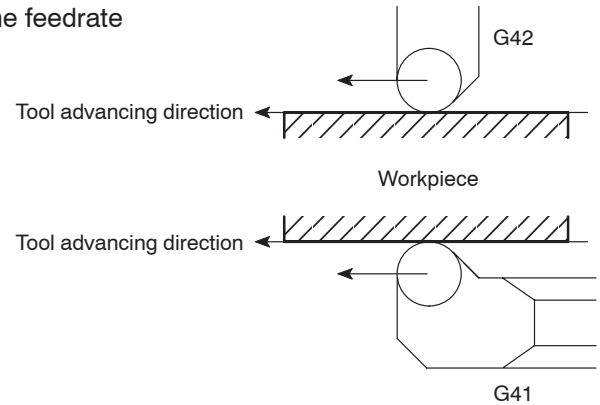

Ex. **Programming using G40, G41, and G42**

The program is rewritten below using the automatic tool nose R offset function.

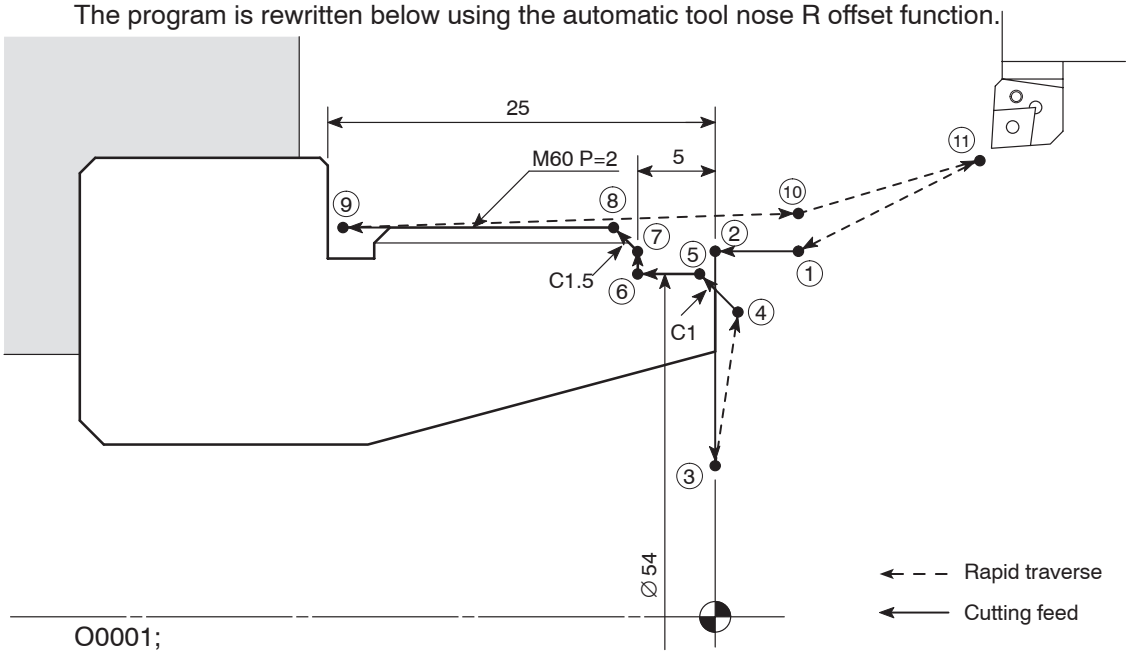

O0001;
N1;
G50 S2000;
G00 T0101;
G96 S200 M03;

G42 X56.0 Z20.0 M08; . . . . . Positioning at ① at a rapid traverse rate to move the cutting tool close to the workpiece
Since the automatic tool nose radius offset (right) function is called by the G42 command, the NC enters the automatic tool nose radius offset mode from this block.

G01 Z0 F1.0; . . . . . Positioning at ② at a cutting feedrate while the tool position is offset to the right

G41 X30.0 F0.15; . . . . . Facing at a feedrate of 0.15 mm/rev
Since the tool position must be offset to the left for this facing operation, the G41 command is specified.

G42 G00 X50.0 W1.0; . . . . . Positioning along path ③ → ④ at a rapid traverse rate to execute the O.D. cutting
Since the tool position must be offset to the right for the following O.D. cutting operation, the G42 command is specified.

G01 X54.0 Z–1.0; . . . . . Moving along path ④ → ⑤ at a cutting feedrate while the tool position is offset to the right

Z–5.0;
X56.8;
X59.8 Z–6.5;
Z–23.0 F0.2;

G40 G00 U1.0 Z20.0; . . . . . Positioning at ⑩ to move the cutting tool away from the workpiece
The G40 command cancels the automatic tool nose radius offset mode.

X200.0 Z150.0 M09;
M01;

11. **G40, G41, G42** Cutter Radius Offset

The cutter radius offset means shifting of the tool paths to the right or left by the radius from the programmed paths.

For details of the G40 - G42 commands (cutter radius offset), refer to Chapter G, “CUTTER RADIUS OFFSET”.

NOTE The cutter radius offset function can be used only for models with the Y-axis specification. This function cannot be used for other machine models.

Generally, when cutting a pocket or carrying out contouring operation using an end mill, the cutter radius offset function is used to finish the workpiece in the shape specified in the drawing.
How the shape in Fig. 1 is finished using the cutter radius offset function is briefly explained below.

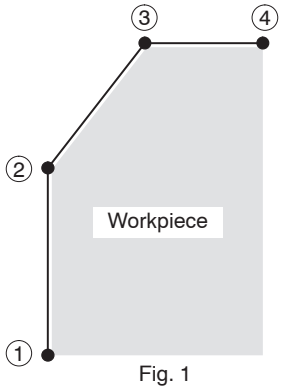

Fig. 1

Specify the required shape to be finished in the program:
① → ② → ③ → ④

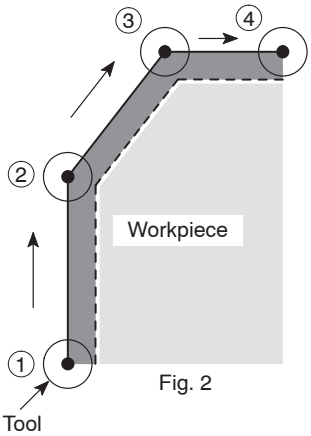

Fig. 2

Since the center of a cutting tool moves along the defined paths, the cutting tool moves along the paths shown in Fig. 2 if the program is created without using the cutter radius offset function.

The workpiece is finished to the shape indicated by broken line in Fig. 2, which is smaller than the required shape indicated in Fig. 1 by the radius of the cutting tool.

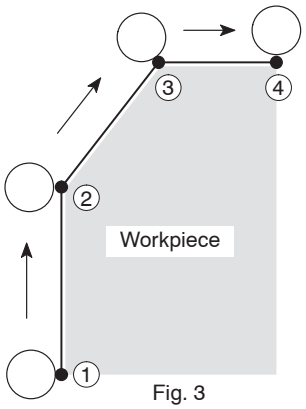

Fig. 3

To shift the tool path from the programmed path, input the radius of the cutter tool for “R” at the tool geometry offset data setting screen.

If the cutter radius offset function is used, the tool paths are shifted outside from the programmed paths by the input offset amount as shown in Fig. 3 to finish the required shape.

In this manner, by shifting the tool paths from the programmed paths by using the cutter radius offset function, it is not necessary to obtain the coordinate values using complicated calculation to generate the tool paths to finish the workpiece to the required shape.

COMMAND

1. Cutter radius offset in the XY plane

G17 G01(G00) G41(G42) X_ Y_ F_ ;
G40 G01(G00) X_ Y_ I_ J_ F_ ;

2. Cutter radius offset in the YZ plane

G19 G01(G00) G41(G42) Y_ Z_ F_ ;
G40 G01(G00) Y_ Z_ J_ K_ F_ ;

- G17, G19 ..... Selects the plane where cutter radius offset is executed.
- G01(G00) ..... Selects the interpolation mode in which the cutter radius offset function is executed.

  G00 ..... Rapid traverse
  G01 ..... Cutting feed
- G41 ..... Calls the cutter radius offset mode (offset to the left).

  The tool paths are generated by shifting the programmed paths to the left in reference to the tool advancing direction by the specified offset amount.

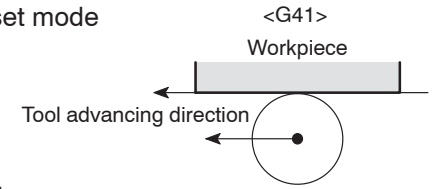

- G42 ..... Calls the cutter radius offset mode (offset to the right).

  The tool paths are generated by shifting the programmed paths to the right in reference to the tool advancing direction by the specified offset amount.

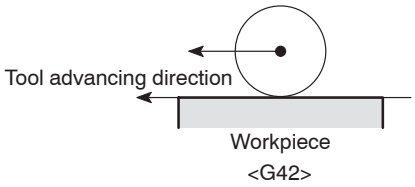

- G40 ..... Cancels the cutter radius offset mode.
- X, Y, Z ..... Specifies the coordinate values of the end point.
- I, J, K ..... The direction of the workpiece shape defined in the following block. The I, J, and K commands are specified in incremental values.
- F ..... Specifies feedrate.

12. G32, G92 Thread Cutting (Continuous Thread Cutting and Thread Cutting Cycle)

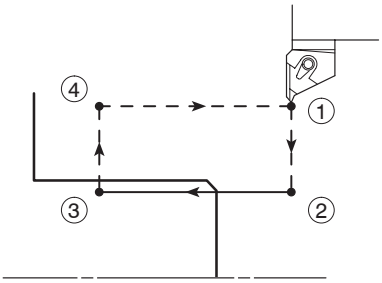

<O.D. thread cutting cycle>

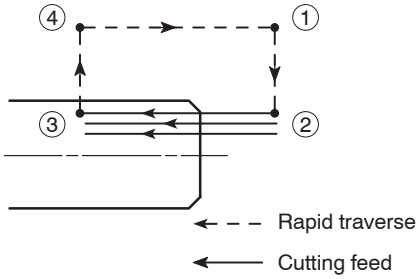

The G32 command is used to execute the thread cutting from point ② to point ③.

In thread cutting operation, threads are not cut in a single path of thread cutting. They are formed by repeating the thread cutting path several times while changing the cutting position.

If the G32 command is used, tool path ① → ②, ② → ③, ③ → ④, and ④ → ①, must be specified repeatedly for each operation.

The G92 command generates one cycle of thread cutting paths ① → ② → ③ → ④. Therefore, in the G92 mode, the thread cutting cycle is repeated by simply specifying the diameter where the cycle is to be executed.

Generally, thread cutting is executed in the G92 mode.

COMMAND

1. Standard format (setting made before shipping the machine)

<Straight thread cutting>

G32 Z(W)_ F_ Q_ ;
G92 X(U)_ Z(W)_ F_ Q_ ;

<Tapered thread cutting>

G32 X(U)_ Z(W)_ F_ Q_ ;
G92 X(U)_ Z(W)_ R_ F_ ;

<Scrolled thread cutting on face>

G32 X(U)_ F_ Q_ ;

2. F15 format

<Straight thread cutting>

G32 Z(W)_ F(E)_ Q_ ;
G92 X(U)_ Z(W)_ F_ Q_ ;

<Tapered thread cutting>

G32 X(U)_ Z(W)_ F(E)_ Q_ ;
G92 X(U)_ Z(W)_ I_ F_ ;

<Scrolled thread cutting on face>

G32 X(U)_ F(E)_ Q_ ;

- G32 . . . . . Calls the thread cutting operation.
- G92 . . . . . Calls the thread cutting cycle.
- X . . . . . (G32) Specifies the X coordinate of the thread cutting end point.
  (G92) Specifies the diameter at which the first thread cutting cycle is executed.
- Z . . . . . Specifies the Z coordinate of the thread cutting end point.
- U, W . . . . . (G32) Specifies the distance and direction from the start point to end point of thread cutting.
  (G92) Specifies the distance and direction from the start point to end point of thread cutting cycle.
- R, I . . . . . Specifies tapered size in the X-axis direction. It is specified using a signed value in radius.
- F, E . . . . . Specifies thread lead.
- Q . . . . . Specifies the angle of shift of the thread cutting start angle. The angle should be specified in the units of 0.001 degrees without a decimal point.

  Q1000 . . . . . 1°

NOTE

① Specify address Q when cutting multi-start threads.

② Specify address Q for all blocks where multi-start thread is cut. If address Q is omitted, shift angle of thread cutting start angles is 0°.

③ A decimal point is not accepted with address Q.

Shift angle 90° Q90000

Shift angle 180° Q180000

④ Programmable range of address Q value is from 0 to 360000.

<Straight thread>

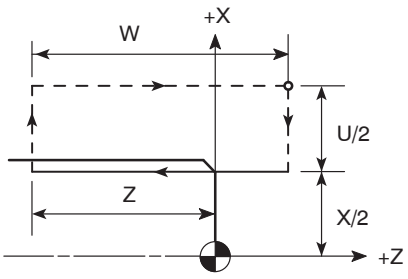

<Tapered thread>

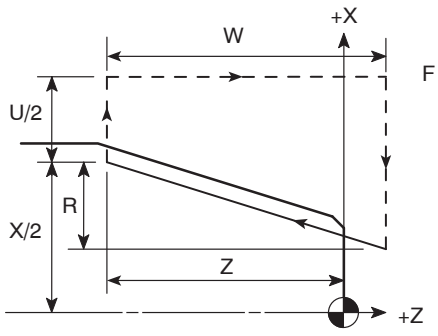

<Scroll thread>

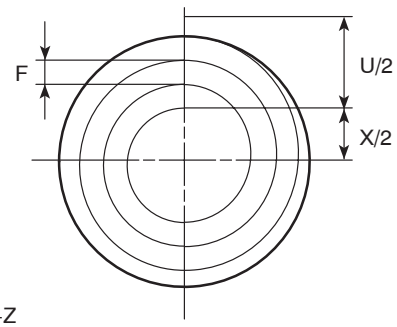

1) Incomplete thread portion

At the start and end of an axis feed, an axis drive servo motor is automatically accelerated or decelerated. Consequently, inaccurate thread leads are generated where thread cutting starts and ends. These areas are referred to as incomplete thread portions.

To explain incomplete thread portions more completely, thread cutting from point A to point B is used as an example.

When thread cutting starts from point A, axis feed is accelerated causing incomplete thread portion for L_1. Similarly, incomplete thread portion is generated for L_2 because axis feed is decelerated at point B.

Therefore, to obtain the thread length of L, it is necessary to carry out thread cutting in the range of (L_1 + L + L_2).

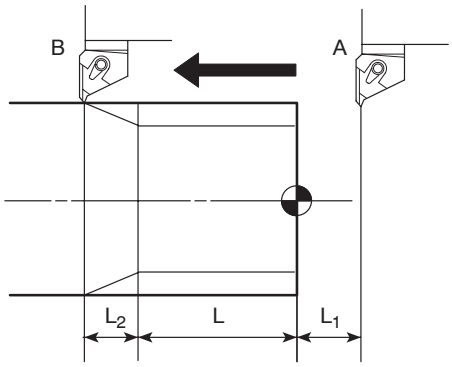

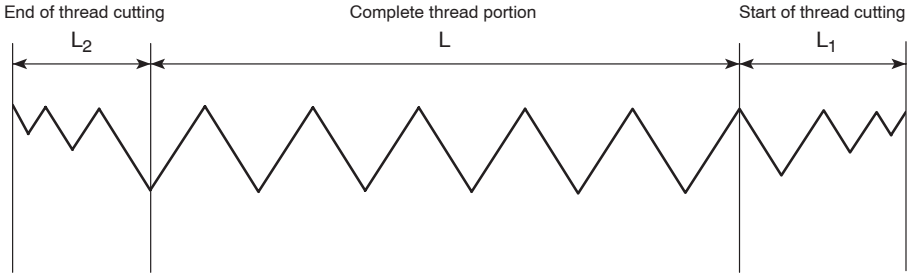

2) Calculating the incomplete thread portion

The incomplete thread portions are calculated using the following formula.

	Approximation Formula	Description
L_1	$L_1 > \dfrac{N \cdot P \cdot A}{1800}$	L_1: Incomplete thread portion (at the start of thread cutting) (mm) L_2: Incomplete thread portion (at the end of thread cutting) (mm) N: Spindle speed (min^{-1}) P: Lead (mm) $A = \ln \dfrac{1}{\text{Thread accuracy}} - 1$ (ln: Natural logarithm)
L_2	$L_2 > \dfrac{N \cdot P}{1800}$	

Thread accuracy $= \dfrac{\Delta LT \text{ (error in lead)}}{L}$	1/50	1/100	1/200	1/300
A	2.91	3.61	4.29	4.70

In actual programming, the incomplete thread portions should be taken a little larger than the calculated lengths to avoid interference between the cutting tool and the workpiece and to allow for margin for safety.

CAUTION

If the tailstock is used for machining a workpiece, pay sufficient care to avoid interference between the cutting tools or tool holders and the tailstock body, the tailstock spindle or the tailstock spindle center. (Applies only to machines equipped with a tailstock)

3) Precautions on thread cutting operation

CAUTION

When the emergency stop button or RESET (RESET) key has been pressed to stop the machine during a threading operation, carefully feed the axes after checking the workpiece and cutting tool carefully for damage. If you feed the axes without due care, the workpiece and cutting tool may collide or interfere with each other, and this could damage the machine.

NOTE ①

The feedrate (lead) during thread cutting is limited by the value calculated in the following formula.

$$P \leq \frac{R}{N}$$

N: Spindle speed (min^{-1})
R: Maximum cutting feedrate (mm/min)
(Note that maximum cutting feedrate varies among machine models.)
P: Lead (mm)

The lead calculated above is the theoretical value. Depending on the machining conditions, load will become excessive causing a servo alarm or the thread lead cannot be machined accurately. Therefore, it is necessary to determine the machining conditions to meet actual machining status.

NOTE

② During the thread cutting operation, the feedrate override* setting is ignored.

* Override: The feedrate override function is used to change the feedrate with the switch on the operation panel.

③ Thread cutting must be executed while the spindle rotates at a fixed speed.

Therefore, specify the G97 command to make spindle speed constant.

④ To execute chamfering of the thread in the G32 mode, specify thread chamfering using U and W incremental commands in the 45° direction following the thread cutting block. Chamfer distance must be sufficient to clear the thread height.

⑤ During continuous thread cutting operation, do not change the thread lead.

If the thread lead is changed, incorrect thread is generated at the portion between the blocks.

⑥ If the SP (SP) switch is pressed while in the G92 thread cutting cycle, the cutting tool immediately retracts from the workpiece along the chamfering path and returns to the start point in the order of the X-axis and the Z-axis.

This function is called the retract function.

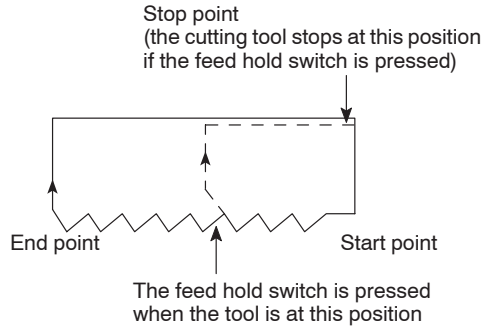

⑦ If the SP (SP) switch is pressed while in the G32 thread cutting cycle, execution of the program is suspended in the feed hold mode after the execution of the non-thread cutting block appearing first following the present thread cutting mode blocks.

⋮

X29.4;

G32 Z–52.0 F2.0; . . . The SP (SP) switch is pressed during the execution of this block.

G00 X60.0; . . . . . Feed hold after the completion of this block

Z10.0;

⋮

⑧ The cutting feedrate specified in a program is ignored and the thread cutting is carried out at the feedrate set with the OVERRIDE dial (0 to 1260 mm/min in 15 steps) if the dry run function is made valid.

4) Depth of Cut and Number of Passes for Thread Cutting

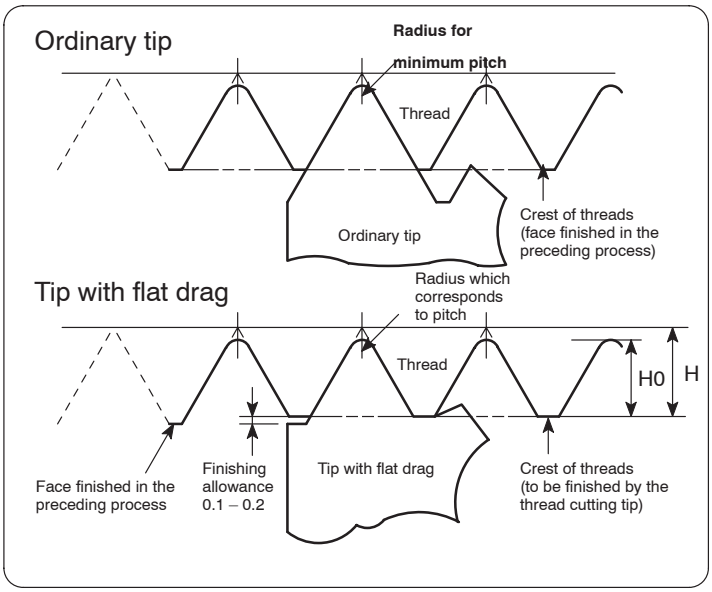

The total depth of cut includes the finishing allowance of 0.1 to 0.2 mm, which is shown in the illustration in the left, so that the data can be used for thread cutting operation using the tip with flat drag.

Since the tip size of a tip with flat drag is smaller than that of an ordinary tip, it is recommended to select smaller depth of cut while increasing the number of passes to avoid elastic deformation of the tip nose as well as chipping of the tip.

Depth of Cut and Number of Passes for Cutting ISO O.D. Thread (Reference)

Pitch	0.5	0.75	1.0	1.25	1.5	1.75	2.0	2.5	3.0	3.5	4.0	4.5	5.0
H	0.38	0.56	0.76	0.95	1.14	1.33	1.52	1.89	2.28	2.65	3.03	3.41	3.79
H0	0.32	0.47	0.63	0.79	0.95	1.11	1.27	1.58	1.90	2.21	2.53	2.85	3.16
R	0.06	0.09	0.13	0.16	0.19	0.22	0.25	0.31	0.38	0.44	0.50	0.56	0.63
1	0.15	0.18	0.25	0.25	0.30	0.30	0.30	0.35	0.35	0.40	0.40	0.40	0.45
2	0.12	0.12	0.20	0.20	0.25	0.25	0.25	0.30	0.30	0.35	0.35	0.35	0.35
3	0.10	0.10	0.13	0.15	0.20	0.20	0.20	0.25	0.25	0.30	0.30	0.30	0.30
4	0.05	0.10	0.10	0.14	0.15	0.16	0.20	0.20	0.20	0.25	0.25	0.25	0.25
5		0.05	0.05	0.10	0.10	0.15	0.15	0.20	0.20	0.20	0.20	0.25	0.25
6				0.05	0.05	0.10	0.12	0.15	0.15	0.20	0.20	0.20	0.20
7						0.05	0.10	0.15	0.15	0.15	0.20	0.20	0.20
8							0.05	0.10	0.15	0.15	0.15	0.20	0.20
9								0.05	0.10	0.15	0.15	0.15	0.20
10									0.10	0.10	0.15	0.15	0.15
11									0.05	0.10	0.10	0.15	0.15
12										0.05	0.10	0.10	0.15
13											0.10	0.10	0.10
14											0.05	0.10	0.10
15												0.10	0.10
16												0.05	0.10
17													0.10
18													0.05
19													
20													

5) Basic profile and dimensions and dimensional deviations of taper pipe threads (Extract from JIS B 0203-$_{1982}$)

Basic Profile Applied for Taper External and Taper Internal Threads	Basic Profile Applied for Parallel Internal Threads
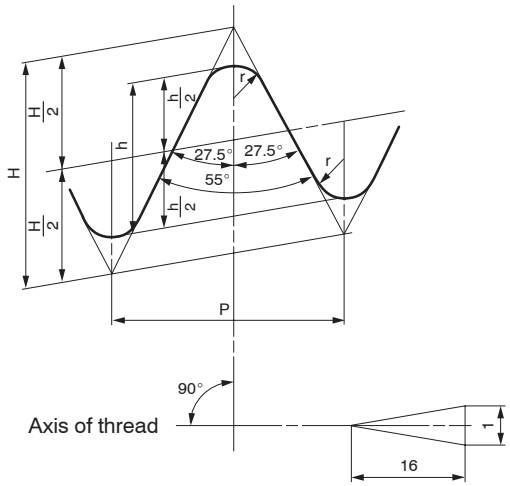	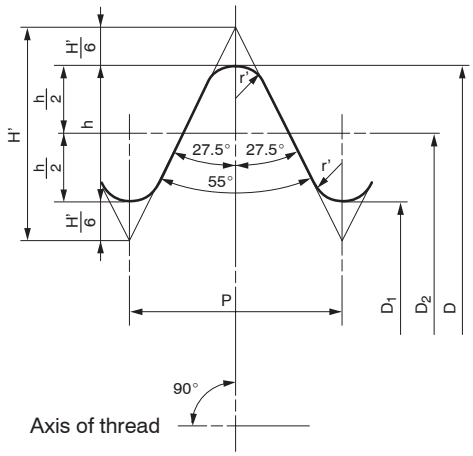
NOTE Thick continuous line shows basic profile.	NOTE Thick continuous line shows basic profile.
$P = \frac{25.4}{n}$ H = 0.960237 P h = 0.640327 P r = 0.137278 P	$P = \frac{25.4}{n}$ H' = 0.960491 P h = 0.640327 P r' = 0.137329 P

Fit between Taper External Thread and Taper Internal or Parallel Internal Thread

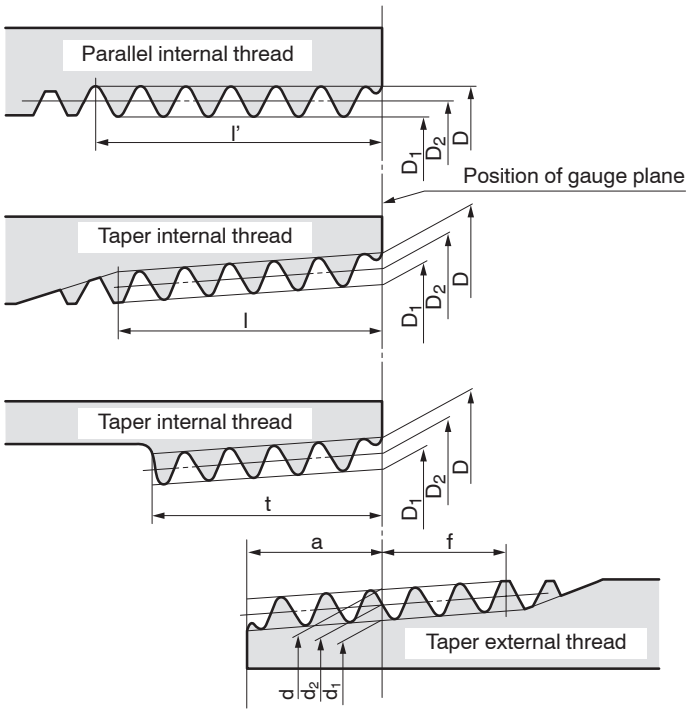

Unit: mm

Designation of thread	Thread				Gauge dia.			Position of gauge plane			Tolerance on D, D_2 and D_1 of parallel internal thread ±	Length of useful thread (min.)				Size of carbon steel pipe for ordinary piping (Given for reference)	
	Number of threads (in 25.4 mm) n	Pitch P (Given for reference)	Height of thread h	Radius r or r'	External thread			External thread		Internal thread		External thread	Internal thread				
					Major dia. d	Pitch dia. d_2	Minor dia. d_1	From pipe end		A+ pipe end		From position of gauge plane toward larger dia. end f	When there is incomplete thread part		When there is no incomplete thread part		
					Internal thread			Gauge length a	Axial tolerance ± b	Axial tolerance ± c			Taper internal thread	Parallel internal thread	Taper internal thread, parallel internal thread		
					Major dia. D	Pitch dia. D_2	Minor dia. D_1						From position of gauge plane toward smaller dia. end l	From end of pipe or coupler l' (Given for reference)	From gauge plane or end of pipe or coupler t	Outside dia.	Thickness
R $^1/_{16}$	28	0.9071	0.581	0.12	7.723	7.142	6.561	3.97	0.91	1.13	0.071	2.5	6.2	7.4	4.4	—	—
R (PT) $^1/_8$	28	0.9071	0.581	0.12	9.728	9.147	8.566	3.97	0.91	1.13	0.071	2.5	6.2	7.4	4.4	10.5	2.0
R (PT) $^1/_4$	19	1.3368	0.856	0.18	13.157	12.301	11.445	6.01	1.34	1.67	0.104	3.7	9.4	11.0	6.7	13.8	2.3
R (PT) $^3/_8$	19	1.3368	0.856	0.18	16.662	15.806	14.950	6.35	1.34	1.67	0.104	3.7	9.7	11.4	7.0	17.3	2.3
R (PT) $^1/_2$	14	1.8143	1.162	0.25	20.955	19.793	18.631	8.16	1.81	2.27	0.142	5.0	12.7	15.0	9.1	21.7	2.8
R (PT) $^3/_4$	14	1.8143	1.162	0.25	26.441	25.279	24.117	9.53	1.81	2.27	0.142	5.0	14.1	16.3	10.2	27.2	2.8
R (PT) 1	11	2.3091	1.479	0.32	33.249	31.770	30.291	10.39	2.31	2.89	0.181	6.4	16.2	19.1	11.6	34	3.2
R (PT) 1 $^1/_4$	11	2.3091	1.479	0.32	41.910	40.431	38.952	12.70	2.31	2.89	0.181	6.4	18.5	21.4	13.4	42.7	3.5
R (PT) 1 $^1/_2$	11	2.3091	1.479	0.32	47.803	46.324	44.845	12.70	2.31	2.89	0.181	6.4	18.5	21.4	13.4	48.6	3.5
R (PT) 2	11	2.3091	1.479	0.32	59.614	58.135	56.656	15.88	2.31	2.89	0.181	7.5	22.8	25.7	16.9	60.5	3.8
R (PT) 2 $^1/_2$	11	2.3091	1.479	0.32	75.184	73.705	72.226	17.46	3.46	3.46	0.216	9.2	26.7	30.1	18.6	76.3	4.2
R (PT) 3	11	2.3091	1.479	0.32	87.884	86.405	84.926	20.64	3.46	3.46	0.216	9.2	29.8	33.3	21.1	89.1	4.2
R (PT) 4	11	2.3091	1.479	0.32	113.030	111.551	110.072	25.40	3.46	3.46	0.216	10.4	35.8	39.3	25.9	114.3	4.5
R (PT) 5	11	2.3091	1.479	0.32	138.430	136.951	135.472	28.58	3.46	3.46	0.216	11.5	40.1	43.5	29.3	139.8	4.5
R (PT) 6	11	2.3091	1.479	0.32	163.830	162.351	160.872	28.58	3.46	3.46	0.216	11.5	40.1	43.5	29.3	165.2	5.0

NOTE

① In the Designation of thread column, the symbol given in parentheses is not the one stipulated by the main part of the Standard, but the one stipulated by Annex. This symbol will be repealed in the future.

② Concerning PT3 $^1/_2$ and PT7 to PT12, they are not given in the table above since they are not stipulated by ISO 7/1.

③ Concerning values of “a”, “f”, and/or “t”, if the values specified in the table greatly differ from those stipulated in the standard specific to the part to be machined or those specified in the drawing, use the values stipulated in the standard specific to the part to be machined or those specified in the drawing.

Ex. **Programming using G32 or G92 (Straight thread cutting)**

Thread size	M30
Lead	2 mm
Material	AISI 1045 (Carbon steel)

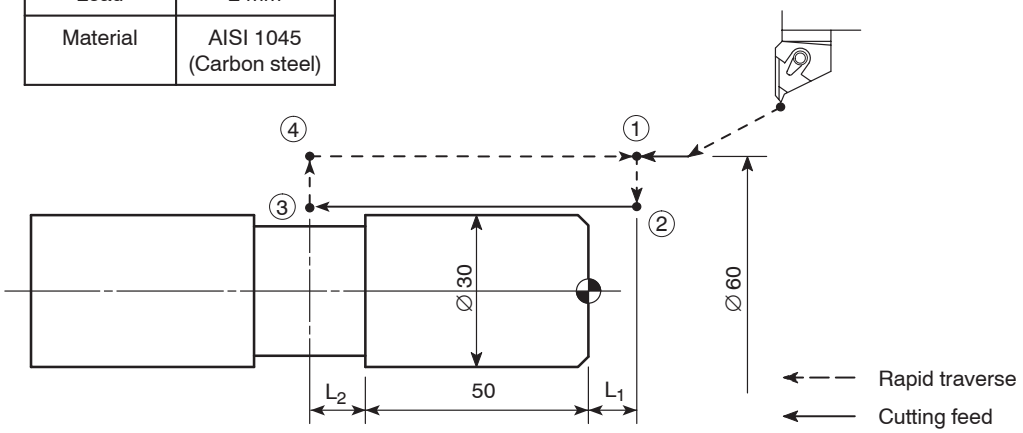

<Determining the spindle speed>

Limits due to the workpiece and cutting tool

$$- \quad N = \frac{1000V}{\pi \cdot D} = \frac{1000 \times 120}{3.14 \times 30} = 1274 \ (\text{min}^{-1})$$

V: Cutting speed (m/min)
π: Circumference constant
P: Thread diameter (mm)

Thread cutting is carried out at 1200 min^{-1}.

NOTE The above numerical values are only for reference. Depending on the selected cutting conditions, the cutting load may become excessive. If a servo alarm occurs, change the cutting conditions.

<Calculating the incomplete thread portions>

$$- \quad L_1 > \frac{N \cdot P \cdot A}{1800} = \frac{1200 \times 2.0 \times 3.61}{1800} = 4.8 \text{ mm}$$

$$- \quad L_2 > \frac{N \cdot P}{1800} = \frac{1200 \times 2.0}{1800} = 1.3 \text{ mm}$$

NOTE If “thread accuracy = 1/100”

Page B–36

When writing a program, L_1 and L_2 should be longer than the calculated theoretical values. Therefore, L_1 and L_2 should be set to 10 mm and 2 mm, respectively.

The thread cutting programs in the G32 mode and in the G92 mode are compared below.

<Program in the G32 mode>	**<Program in the G92 mode>**	
O0001;	O0001;	
N1;	N1;	
G00 T0101;	G00 T0101;	
G97 S1200 M03;	G97 S1200 M03;	Starting the spindle or spindle 1 in the normal direction at 1200 min^{-1}
X60.0 Z20.0 M08;	X60.0 Z20.0 M08;	
G01 Z10.0 F1.0;	G01 Z10.0 F1.0 M24;	Positioning at point ①, the thread cutting start point
G00 X29.4; . . . . . ②	**G92 X29.4 Z–52.0 F2.0;**	
	. . . . .	Starting the thread cutting operation
G32 Z–52.0 F2.0; . . . ③		• X29.4 . . . . . Diameter where the first thread cutting cycle is executed
G00 X60.0; . . . . . ④		• Z–52.0 . . . . Z coordinate of the thread cutting end point
Z10.0; . . . . . ①		• F2.0 . . . . . Lead
X28.9;	X28.9;	
G32 Z–52.0;		
G00 X60.0;		
Z10.0;		
X28.5;	X28.5;	
G32 Z–52.0;		
G00 X60.0;		
Z10.0;		
X28.1;	X28.1;	
G32 Z–52.0;		
G00 X60.0;		
Z10.0;		
X27.8;	X27.8;	
G32 Z–52.0;		
G00 X60.0;		
Z10.0;		
X27.56;	X27.56;	
G32 Z–52.0;		
G00 X60.0;		
Z10.0;		

```
X27.36;                    X27.36;
G32 Z–52.0;
G00 X60.0;
Z10.0;
X27.26;                    X27.26; ..... Diameter where the final thread
                                         cutting cycle is executed
G32 Z–52.0;
G00 X60.0;
Z10.0;
X200.0 Z150.0 M09;         G00 X200.0 Z150.0 M09;
                           ..... Positioning at a point at a rapid
                                 traverse rate where the turret
                                 head can be rotated
M01;                       M01;
```

① The program written in four lines, in the G32 mode, is expressed by the commands in one line in the G92 mode.

② In the G92 thread cutting cycle, whether the chamfering is executed or not can be selected using the M23 and M24 commands.

For details of the M23 and M24 commands, refer to page C–30 (7.).

CAUTION

Generally, the start point (X coordinate) for thread cutting is taken at a point more than one pitch away from the thread cutting diameter.

For I.D. thread cutting, the cutting tool may interfere with the workpiece when the I.D. is small if the start point is taken in the manner as indicated above. In this case, determine the start point where interference does not occur.

NOTE

For details of depth of cut and number of passes, refer to page B–38. Note that the values given in this table are only for reference.

For programming, these values should be determined according to actual machining status. The finished thread should be checked using the thread gage.

Ex. **Programming using G32 or G92 (Tapered thread cutting (R2 1/2))**

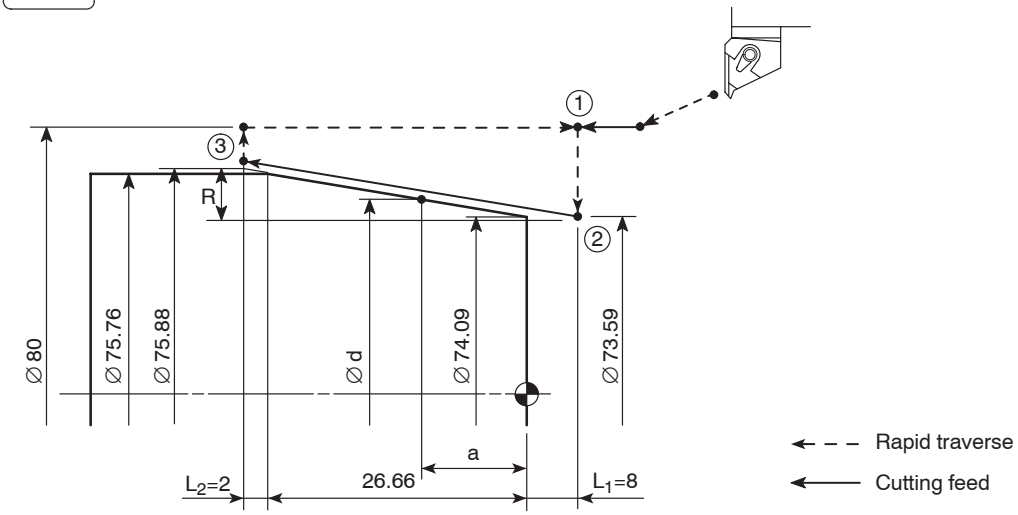

<Determining the spindle speed>

Limits due to the workpiece and cutting tool

$$- \quad N = \frac{1000V}{\pi \cdot D} = \frac{1000 \times 100}{3.14 \times 75}$$

$$= 424 \ (\text{min}^{-1})$$

Thread cutting is executed at spindle speed of 420 min^{-1}.

a	17.46
f	9.2
d dia.	75.184
P (lead)	2.3091
h (thread height)	1.479
t (taper size)	1/16

(Material: AISI 1045 (Carbon steel), Cutting feedrate: 100 m/min)

For the numerical values given above, refer to page B–39.
When machining the taper pipe threads not described in the above example, refer to page B–39 to find the reference dimension and create the program.

NOTE The above numerical values given above are only for reference. Depending on the selected cutting conditions, the cutting load may become excessive. If a servo alarm occurs, or if the thread lead cannot be machined correctly, change the cutting conditions.

<Calculating incomplete thread portions>

$$- \quad L_1 > \frac{N \cdot P \cdot A}{1800} = \frac{420 \times 2.3091 \times 3.61}{1800} = 1.95 \text{ mm}$$

$$- \quad L_2 > \frac{N \cdot P}{1800} = \frac{420 \times 2.3091}{1800} = 0.54 \text{ mm}$$

NOTE If “thread accuracy = 1/100”

Page B–36

When writing a program, L_1 and L_2 should be longer than the calculated theoretical values. Therefore, L_1 and L_2 should be set to 8 mm and 2 mm, respectively.
For L_1, it is recommended to select a multiple of “8”, because the taper size is “1/16”.

<Program in the G32 mode>	**<Program in the G92 mode>**	
O0001;	O0001;	
N1;	N1;	
G00 T0101;	G00 T0101;	
G97 S420 M03;	G97 S420 M03;	
	. . . . .	Starting the spindle or spindle 1 in the normal direction at 420 min^{-1}
X80.0 Z20.0 M08;	X80.0 Z20.0 M08;	
G01 Z8.0 F1.0;	G01 Z8.0 F1.0 M23;	
	. . . . .	Positioning at point ①, the thread cutting start point
G00 X73.59; . . . . . ②	**G92 X75.88 Z–28.66 R–1.15 F2.3091;**	
	. . . . .	Starting the thread cutting operation
G32 X75.88 Z–28.66 F2.3091; ③		• X75.88 . . . . . Diameter where the first thread cutting cycle is executed
G00 X80.0; . . . . . ④		
Z8.0; . . . . . ①		
X72.59;	X74.88;	• Z–28.66 . . . . Z coordinate of the thread cutting end point
G32 X74.88 Z–28.66;		
G00 X80.0;		
Z8.0;		
X71.59;	X73.88;	• R–1.15 . . . . . Taper size (distance in the X-axis direction)
G32 X73.88 Z–28.66;		
G00 X80.0;		
Z8.0;		
X70.7;	X72.99;	$R = -\frac{8.0 + 26.66 + 2.0}{32} = -1.15$
G32 X72.99 Z–28.66;		
G00 X80.0;		
Z8.0;		
X70.64;	X72.93;	Diameter where the final thread cutting cycle is executed
G32 X72.93 Z–28.66;		
G00 X80.0;		
Z8.0;		
X200.0 Z150.0 M09;	G00 X200.0 Z150.0 M09;	
	. . . . .	Positioning at a point at a rapid traverse rate where the turret head can be rotated
M01;	M01;	

NOTE

① In the example program above, the diameter where the first thread cutting cycle is executed is specified in the outside diameter of the workpiece. In actual programming, the diameter of the first thread cutting path including the depth of cut must be specified.

② The depth of cut and the number of passes adopted to the example program above are only for reference. For programming, these values should be determined according to actual machining status. The finished thread should be checked using the thread gage.

For the sign (+, –) to be used for the R command, refer to the table given in page B–54.

Ex. **Programming using G32 (Scrolled thread cutting)**

NOTE ① For the scrolled thread cutting operation on face, the G92 (constant surface speed control) mode cannot be used. Therefore, cutting resistance is applied to the cutting tool.

Determine the spindle speed assuming thread cutting at the middle of the varying diameters.

② In the G92 mode, scrolled thread cutting is not executed.

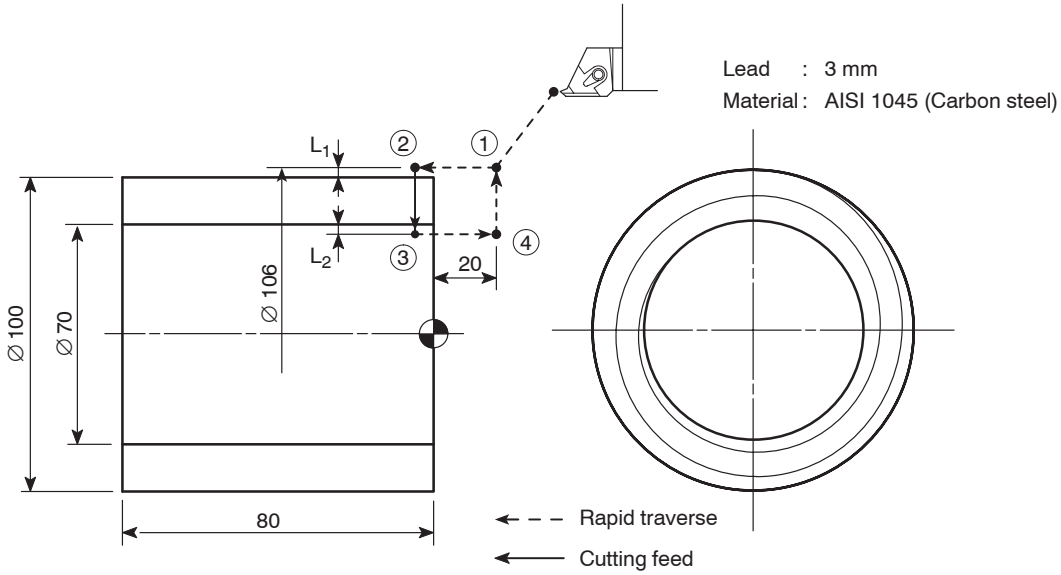

<Determining the spindle speed (Cutting feedrate: 100 m/min)>

Limits due to the workpiece and cutting tool

$$N = \frac{1000V}{\pi \cdot D} = \frac{1000 \times 100}{3.14 \times 85} = 374 \ (\text{min}^{-1})$$

Thread cutting is executed at spindle speed of 370 min^{-1}.

NOTE The above numerical values given above are only for reference. Depending on the selected cutting conditions, the cutting load may become excessive. If a servo alarm occurs, or if the thread lead cannot be machined correctly, change the cutting conditions.

<Calculating incomplete thread portions>

$$- \quad L_1 > \frac{N \cdot P \cdot A}{1800} = \frac{370 \times 3.0 \times 3.61}{1800} = 2.23 \text{ mm}$$

$$- \quad L_2 > \frac{N \cdot P}{1800} = \frac{370 \times 3.0}{1800} = 0.62 \text{ mm}$$

If “thread accuracy = 1/100”

Page B–36

When writing a program, L_1 and L_2 should be longer than the calculated theoretical values. Therefore, L_1 and L_2 should be set to 3 mm and 1 mm, respectively.

The thread is cut eleven times as depth of cut per thread cutting is 0.1 mm.

```
O0001;
N1;
G00 T0101;
G97 S370 M03; ..... Starting the spindle or spindle 1 in the normal
                    direction at 370 min–1
X106.0 Z20.0 M08; ..... Positioning at ①, the start point for thread cutting,
                        at a rapid traverse rate
Z–0.35; ..... ②     Starting the thread cutting operation
G32 X68.0 F3.0; ..... ③   • Z–0.35 ..... Z-axis position of the first thread
                              cutting path
G00 Z20.0; ..... ④        • X68.0 ..... The end point of thread cutting
X106.0; ..... ①           • F3.0 ..... Thread lead
Z–0.65; ..... Z-axis position of the second thread cutting path
G32 X68.0;
G00 Z20.0;
X106.0;
Z–0.9; ..... Z-axis position of the third thread cutting path
G32 X68.0;
G00 Z20.0;
X106.0;
Z–1.1; ..... Z-axis position of the fourth thread cutting path
G32 X68.0;
G00 Z20.0;
X106.0;
```

```
Z–1.3; ..... Z-axis position of the fifth thread cutting path
G32 X68.0;
G00 Z20.0;
X106.0;
Z–1.45; ..... Z-axis position of the sixth thread cutting path
G32 X68.0;
G00 Z20.0;
X106.0;
Z–1.6; ..... Z-axis position of the seventh thread cutting path
G32 X68.0;
G00 Z20.0;
X106.0;
Z–1.75; ..... Z-axis position of the eighth thread cutting path
G32 X68.0;
G00 Z20.0;
X106.0;
Z–1.85; ..... Z-axis position of the ninth thread cutting path
G32 X68.0;
G00 Z20.0;
X106.0;
Z–1.95; ..... Z-axis position of the tenth thread cutting path
G32 X68.0;
G00 Z20.0;
X106.0;
Z–2.0; ..... Z-axis position of the eleventh thread cutting path
G32 X68.0;
G00 Z20.0;
X106.0 M09;
G00 X200.0 Z100.0 M05; ..... Positioning at a point where the turret head can be
                             rotated, at a rapid traverse rate
M30;
```

13. **G32** Tapping (On the Center of Spindle)

The G32 command is used to execute a tapping cycle at the center of the spindle (workpiece).

NOTE A tapper should be used when executing tapping by specifying the G32 command.

COMMAND

G32 Z(W) _ F_ ;

- G32 . . . . . Calls the tapping operation.
- Z . . . . . Specifies the Z-coordinate of the tapping end point.
- W . . . . . Specifies the distance and direction from the start point to the end point of tapping.
- F . . . . . Specifies the lead of thread to be cut (mm).

CAUTION For the tapping cycle called by G32, a tapper is used. In this case, the return movement of the Z-axis from the bottom of the machined hole is made with the tapper extended. Therefore, the position where the Z-axis reaches in the return movement must be determined taking into consideration the extending length of the tapper. If the return point is determined without taking this length into consideration, the tapping tool and the workpiece may collide or interfere with each other when the tapping tool moves to the next machining position, and the collision or interference could cause damage to the machine.

NOTE

① The spindle speed must be kept constant during the execution of a tapping cycle. Therefore, specify the G97 command to keep spindle speed constant.

② During the execution of a tapping cycle called by G32, feedrate override and spindle speed override values are fixed to 100% because a fixed lead thread cannot be cut if feedrate or spindle speed is changed during the tapping cycle.

③ The cycle does not stop until the Z-axis returns to the specified return point even if the SP (SP) switch is pressed during the execution of a tapping cycle.

④ In a tapping cycle called by G32, the spindle must be stopped at the bottom of the machined hole. To extract the tapping tool from the machine hole, specify M04 when cutting a right-hand thread or M03 when cutting a left-hand thread.

⑤ Specify the pitch of the tap to be used for address F.

13.1 Cautions on Programming Tapping Using G32

13.1.1 Dwell Command

The following explains in what situation the dwell command should be used in the G32 tapping cycle.

Dwell	To Be Specified	Not Required
Tap hole shape	Blind hole 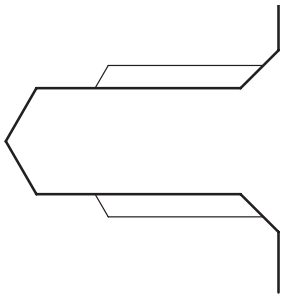	Through hole 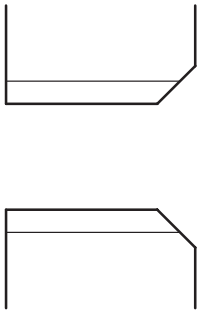
Tapper	Built-in depth sizing device	No special restriction
Tapper extension amount	Tapper is pulled into the hole from the feed stop point of Z-axis by the amount of tapper extension. When the tapper is extended by the set amount, the depth sizing device built in the tapper functions and rotation is not transmitted to the tap, then tapping of specified depth is carried out.	Tapper is extended from the feed stop point of Z-axis. Tapper has allowance to extend 20 to 30 mm. But, actual extension amount cannot be judged.

13.1.2 Precautions on Using the Tapper

When carrying out tapping in a through hole, extension of tapper tip at the hole bottom can be ignored. However, in the case of a blind hole, if the tapper should extend beyond the depth of the prepared hole, it will cause the tap to be damaged.

To avoid such a problem, use the tapper with built-in depth sizing device for tapping a blind hole.

The following distances of F_1, F_2, and F_3 are specified in the catalog of the tapper with built-in depth sizing device.

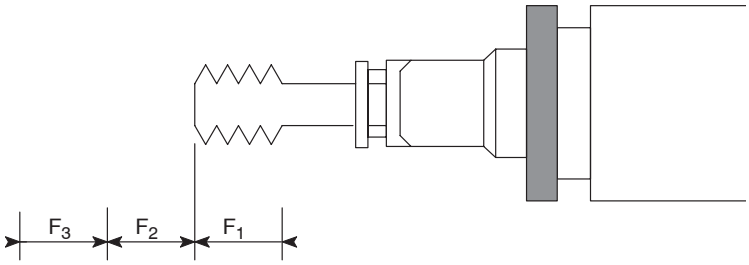

F_1	Contraction	Necessary if the tap fails to be engaged with the workpiece positively at the start of tapping.
F_2	Extension amount	Extension amount at the hole bottom. This is an extension amount of a tapper in normal spindle rotation (for right-hand thread) or reverse rotation (for left-hand thread).
F_3	Extension amount when the tap is pulled out	For right-hand thread: This is an extension amount of a tapper when the tapping tool leaves the workpiece while the spindle is rotating in the reverse direction. For left-hand thread: This is an extension amount of a tapper when the tapping tool leaves the workpiece while the spindle is rotating in the normal direction.

13.1.3 To Finish Tapping at Correct Depth in Blind Hole

When machining a threaded hole with the tapper equipped with depth sizing device, obtain the Z-axis return point and the point of the hole bottom to be specified in a program in the manner indicated below.

NOTE The explanation given below shows the theoretical value. The depth of tapped hole will vary depending on workpiece material and prepared hole diameter in actual operation.

– Z-axis return point

  $Z > F_2 + F_3$

– Hole bottom position

  $Z = -$ (Depth of tapping specified in the drawing $- F_2$ + length of tap engaging length)

  F_2: Extension amount in normal rotation (right-hand thread), extension amount in reverse rotation (left-hand thread)

  F_3: Extension amount in reverse rotation (right-hand thread), extension amount in normal rotation (left-hand thread)

Ex. **Programming using G32 (Tapping)**

To carry out tapping of M8, P = 1.25, and 20 mm deep at the center of the spindle (workpiece) in the G32 mode.

Prepared hole: 6.8 mm dia., depth 30 mm

Tapper to be used: F_2 (extension amount in normal rotation) = 5 mm,
F_3 (extension amount in reverse rotation) = 7 mm

Length of engaging length: 5 mm

```
O0001;
N1;
G00 T0101;
G97 S300 M03; ..... Starting the spindle in the normal direction at 300 min–1
X0 Z15.0; ..... Positioning at (X0, Z15.0) at a rapid traverse rate
G32 Z–20.0 F1.25; ..... Executing the tapping cycle (G32)
```

- Z–20.0 ..... Z = – (“Depth of tap” – F_2 + “Tap engaging length”)
  = – (20 – 5 + 5)
  = – 20 (mm)
- F1.25 ..... Pitch 1.25 mm

```
G04 U0.8; ..... Dwell at the bottom of the hole to allow the tapper
                to extend F2 (extension amount in normal
                rotation) set by the depth sizing device
```

- U0.8 ..... Dwell = $\frac{60 \text{ (sec)} \times F_2}{F \times S}$
  = $\frac{60 \times 5}{1.25 \times 300}$
  = 0.8 (sec)

```
M05; ..... Stopping the spindle
Z15.0 M04; ..... Starting the spindle in the reverse direction and
                returning the tool to Z15.0
```

- Z15.0 ..... Z > $F_2 + F_3$
  $F_2 + F_3$
  = 5 + 7 = 12 (mm)
  Since a value greater than “12” must be set for Z, “Z15.0” is specified in the program.

Tapping cycle is executed in this block too since G32 is modal.

```
G00 X200.0 Z150.0 M05; .... Moving to the position where the turret head can
                           be rotated at a rapid traverse rate
    ⋮
```

14. **G90, G94** O.D./I.D. Cutting Cycle and Face Cutting Cycle

The G90 and G94 commands are used to call the cycles which simplify programming for straight and tapered cutting on O.D., I.D. and end face.

G90	O.D./I.D. cutting cycle
G94	Face cutting cycle

Usually, these cycle are not used.

For details of the functions called by the G90 and G94 commands, refer to the instruction manual supplied by the NC manufacturer.

1. Standard format (setting made before shipping the machine)

   <Straight cutting>

   G90 X(U)_ Z(W)_ F_ ;
   G94 X(U)_ Z(W)_ F_ ;

   <Tapered cutting>

   G90 X(U)_ Z(W)_ R_ F_ ;
   G94 X(U)_ Z(W)_ R_ F_ ;

2. F15 format

   <Straight cutting>

   G90 X(U)_ Z(W)_ F_ ;
   G94 X(U)_ Z(W)_ F_ ;

   <Tapered cutting>

   G90 X(U)_ Z(W)_ I_ F_ ;
   G94 X(U)_ Z(W)_ K_ F_ ;

- G90, G94 . . . . Calls the O.D./I.D. cutting cycle or the face cutting cycle.
- X, Z . . . . . Specify the coordinate values of the end point of cutting cycle.
- U, W . . . . . Specifies the distance and direction from the cutting cycle start point to the cutting cycle end point.
- R . . . . . (G90) Specifies the distance of taper in the X-axis direction (signed, in radius).
  (G94) Specifies the distance of taper in the Z-axis direction (signed).
- I . . . . . Specifies the distance of taper in the X-axis direction (signed, in radius).
- K . . . . . Specifies the distance of taper in the Z-axis direction (signed).
- F . . . . . Specifies feedrate.

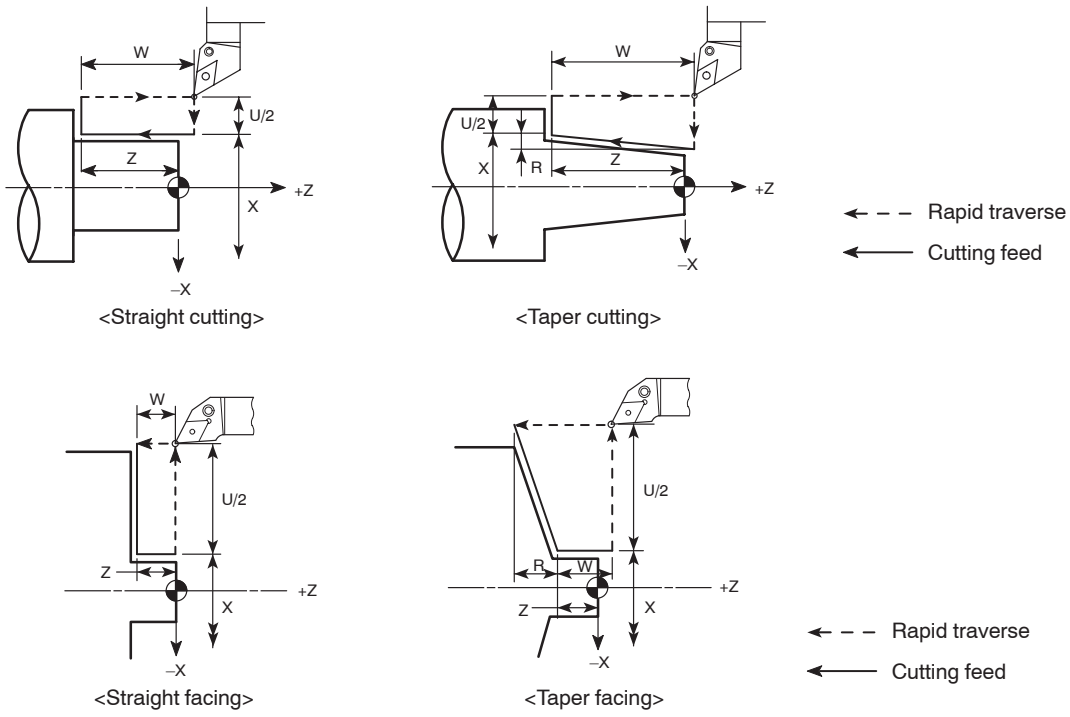

1) Signs for U, W, and R (for O.D./I.D. cutting cycle)

In incremental programming, the relative position of the tool paths defined in relation to the workpiece is determined by the plus or minus sign preceding the U, W and R commands. The relationship is summarized below:

(1) U < 0, W < 0, R < 0	(2) U > 0, W < 0, R > 0
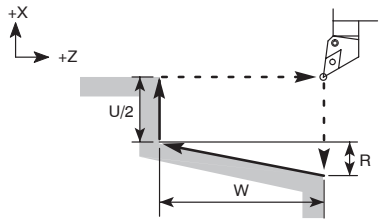	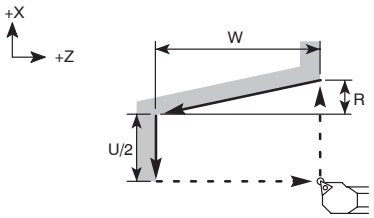
(3) U < 0, W < 0, R > 0 ($\|R\| \le \|U/2\|$)	(4) U > 0, W < 0, R < 0 ($\|R\| \le \|U/2\|$)
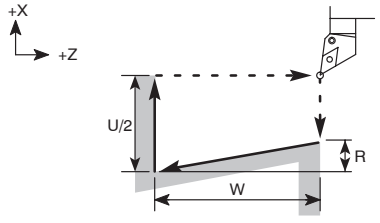	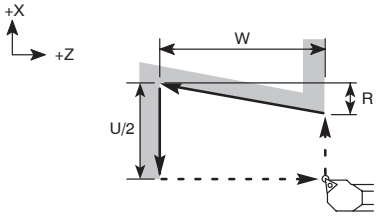

2) Signs for U, W, and R (for face cutting cycle)

In incremental programming, the relative position of the tool paths defined in relation to the workpiece is determined by the plus or minus sign preceding the U, W and R commands. The relationship is summarized below:

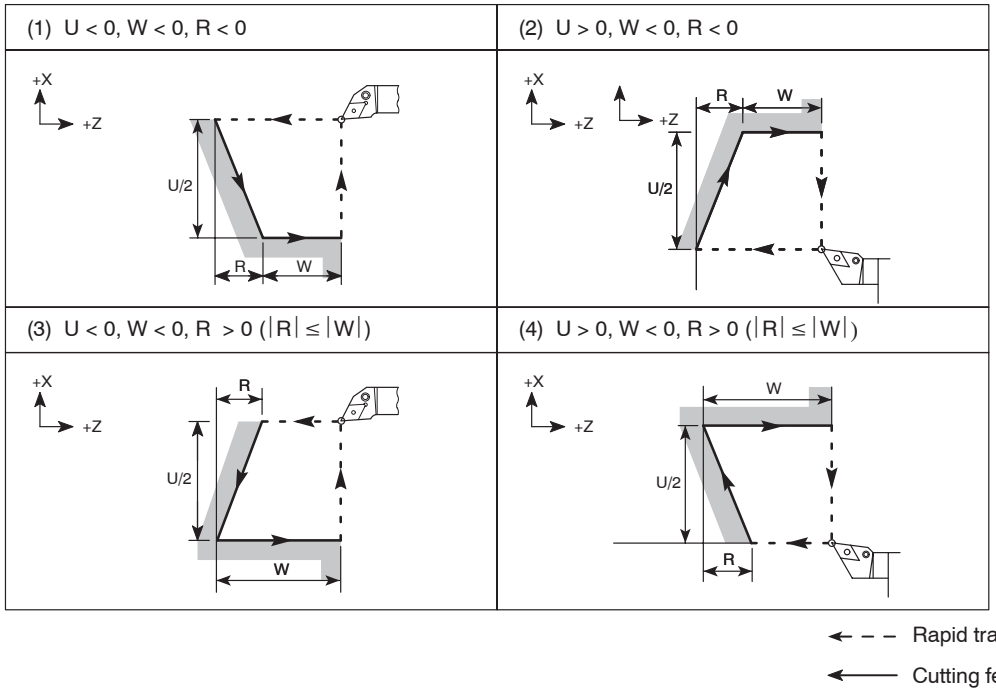

15. **G70 - G76** Multiple Repetitive Cycle

The multiple repetitive cycles simplify the programs for rough and finish cutting processes on O.D. and I.D.

For example, by defining only the workpiece finish shape, the tool paths for executing rough cutting operation are automatically generated.

The table below shows the list of the multiple repetitive cycles. For details on the G codes used to call the multiple repetitive cycles, refer to the Chapter H “MULTIPLE REPETITIVE CYCLES”.

G70	Finishing cycle for G71 to G73
G71	O.D./I.D. rough cutting cycle/Pocket cutting
G72	Rough facing cycle/Pocket cutting
G73	Closed-loop cutting cycle
G74	Face cut-off cycle, face grooving cycle, deep hole drilling cycle
G75	O.D./I.D. grooving cycle, cut-off cycle
G76	Multiple thread cutting cycle/Zigzag infeed mode

NOTE

① Pocket cutting is optional for the SL-25E.

② Zigzag infeed mode for thread cutting cannot be used if the NC model is MSC-500.

COMMAND

(Example: G71 O.D./I.D. rough cutting cycle)

G71 U(1) R_ ;

G71 P_ Q_ U(2) W_ F_ S_ T_ ;

- G71 . . . . . Calls the O.D./I.D. rough cutting cycle.
- U(1) . . . . . Specifies depth of cut (in radius).
- R . . . . . Specifies the retract amount.
- P . . . . . Specifies the sequence number of the first block of the blocks that define the finish shape of the workpiece.
- Q . . . . . Specifies the sequence number of the last block of the blocks that define the finish shape of the workpiece.
- U(2) . . . . . Specifies the finishing allowance in the X-axis direction (in diameter).
- W . . . . . Specifies the finishing allowance in the Z-axis direction.
- F . . . . . Specifies feedrate.
- S . . . . . Specifies spindle speed.

  In the G96 mode: The value specifies cutting speed (m/min)

  In the G97 mode: The value specifies spindle speed (min^{-1}).
- T . . . . . Specifies a tool number and an offset number in a four digit number.

NOTE If F, S or T is not specified, the command which has been specified preceding the G71 block is valid.

Ex. **Programming using G71**

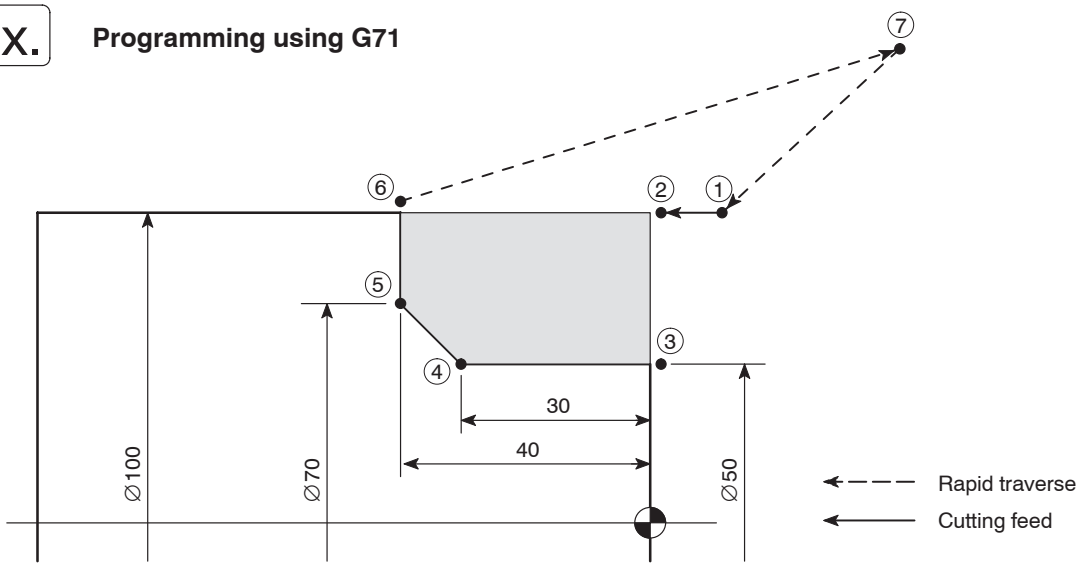


```
O0001;
N1;
G50 S2000;
G00 T0101;
G96 S100 M03;
X102.0 Z20.0 M08; ..... ①
G01 Z2.0 F1.0; ..... ②
1) G71 U2.0 R0.5;
   G71 P100 Q200 U0.3 W0.1 F0.2;
2) N100 G00 X50.0; ..... ③
   G01 Z–30.0; ..... ④
   X70.0 Z–40.0; ..... ⑤
3) N200 X102.0; ..... ⑥
   G00 X150.0 Z100.0 M09; ..... ⑦
   M01;
```

1) The G71 rough cutting cycle is executed.
   - U2.0 . . . . . Depth of cut: 2 mm (in radius)
   - R0.5 . . . . . Retract amount: 0.5 mm
   - P100 . . . . . Sequence number of the first block of the finish shape defining blocks: N100
   - Q200 . . . . . Sequence number of the last block of the finish shape defining blocks: N200
   - U0.3 . . . . . X-axis finishing allowance: 0.3 mm (in diameter)
   - W0.1 . . . . . Z-axis finishing allowance: 0.1 mm
   - F0.2 . . . . . Feedrate: 0.2 mm/rev

2) to 3)

The blocks from sequence number N100 to N200 define the finish shape. These blocks are executed at S100 (100 m/min) and F0.2 (0.2 mm/rev).

16. **G80, G83 - G85, G87 - G89** Hole Machining Canned Cycles

Hole machining operation is programmed using several blocks of commands.
A hole machining canned cycle allows hole machining operation which requires several blocks of commands to be programmed using one block of commands including an appropriate G code.

For details of the hole machining canned cycles, refer to Chapter I “HOLE MACHINING CANNED CYCLE”.

① Hole machining canned cycles can be used only with the MC type or Y-axis specification machines. With the models other than MC type and Y-axis specification, these cycles cannot be used.

② With the SL and SL-S series (excludes the SL-25E, the SL-400 and the SL-600), the synchronized face tapping cycle (M329 G84) can be optionally used for models other than MC type and Y-axis specification. Note that this cycle can be used only at the center of the spindle.

③ With the CL series, the synchronized face tapping cycle (M329 G84) can be optionally used. Note that this cycle can be used only at the center of the spindle.

Basic Pattern of Hole Machining Canned Cycle

Basic command format and movement of the hole machining canned cycle are explained below:

<Movement>

– Face hole machining canned cycle
(G83 - G85)

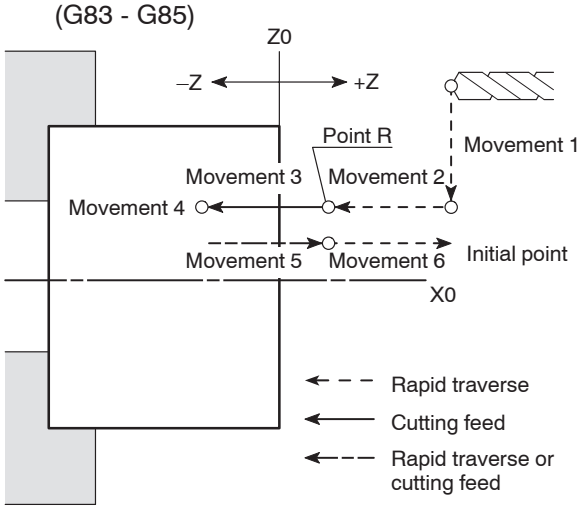

– Side hole machining canned cycle
(G87 - G89)

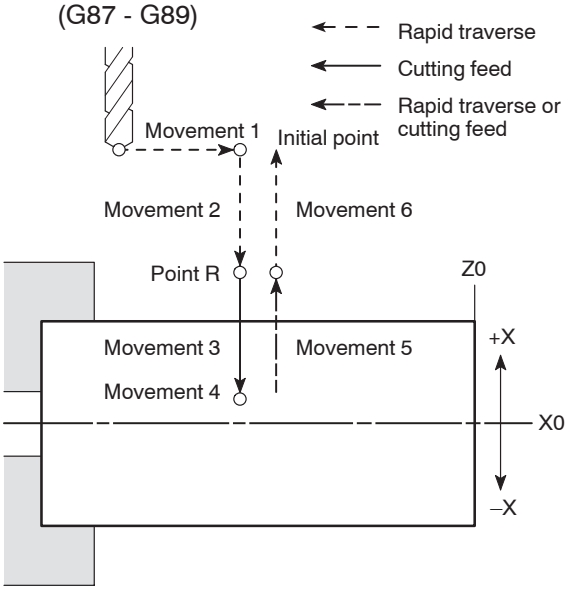

A hole machining canned cycle consists of movements 1 to 6 shown in the diagram.

In the cycle called by G83 to G85, the Z-axis is used as the hole machining axis while the X-axis is used as the hole machining axis in the cycle called by G87 to G89. With the exception of the difference in the hole machining axis, movements 1, 2 and 6 are common to all types of hole machining canned cycles.

Movements 3 to 5 vary according to respective canned cycles.

For a hole machining canned cycle, “initial point” and “point R” indicate the following positions:

– Initial point . . . The position where a hole machining canned cycle starts

– Point R . . . . . The position where hole machining (axis feed at cutting feedrate) cycle starts

Movement 1: Positioning at the hole machining start position

Movement 2: Moving to point R at a rapid traverse rate

Movement 3: Hole machining (Hole machining is carried out.)

Movement 4: Movement at hole bottom

Specify dwell if necessary.

Movement 5: Returning to point R level

NOTE Whether the Z-axis return movement is executed at a rapid traverse rate or cutting feedrate is determined by the G code specified for calling the hole machining canned cycle.

Movement 6: Positioning at initial point at rapid traverse rate

COMMAND

1. Face hole machining canned cycle

G83 - G85 X(U)_ C(H)_ Z(W)_
R_ Q_ P_ F_ K_ (M68);
G83 - G85 X(U)_ Y(V)_ Z(W)_
R_ Q_ P_ F_ K_ (M68);
G80;

- G83 - G85 . . . . Calls a face hole machining canned cycle.

  NOTE Operation mode from movement 3 to movement 5 is determined according the specified G code.

- G80 . . . . . Cancels a hole machining canned cycle.
- X, C, Y . . . . . Absolute command

  Specifies the hole machining positions. (Movement 1)

- U, H, V . . . . . Incremental command

  Specifies the distance and direction of the hole machining position in reference to the previous block. (Movement 1)

- Z . . . . . Absolute command

  Specifies the hole bottom.

- W . . . . . Incremental command

  Specifies the distance and direction of the hole bottom in reference to the point R.

- R . . . . . Incremental command

  Specifies the distance and direction of the point R in reference to the initial point.

- Q . . . . . Specifies depth of cut per one infeed motion (G83).
- P . . . . . Specifies the period of dwell function executed at the hole bottom.

  P1500 → 1.5 sec

- F . . . . . Specifies feedrate.

- K . . . . . Specifies the number of repetitions.

  NOTE K1 . . . . . At the position specified in the block containing K1, hole machining cycle is executed once. (Omissible)

  K2 to K9999 . . . At the position specified in the block containing a K command, hole machining cycle is repeated by the specified number of times.

- (M68) . . . . . Spindle or spindle 1 brake clamp (C-axis clamp or C-axis clamp of spindle 1)

  Specify M68 to carry out heavy-duty cutting.

COMMAND

2. Side hole machining canned cycle

G87 - G89 Z(W)_ C(H)_ X(U)_
R_ Q_ P_ F_ K_ (M68);
G87 - G89 Z(W)_ Y(V)_ X(U)_
R_ Q_ P_ F_ K_ (M68);
G80;

- G87 - G89 . . . . Calls a side hole machining canned cycle.

  NOTE Operation mode from movement 3 to movement 5 is determined according the specified G code.

- G80 . . . . . Cancels a hole machining canned cycle.
- Z, C, Y . . . . . Absolute command

  Specifies the hole machining positions. (Movement 1)

- W, H, V . . . . . Incremental command

  Specifies the distance and direction of the hole machining position in reference to the previous block. (Movement 1)

- X . . . . . Absolute command

  Specifies the hole bottom.

- U . . . . . Incremental command

  Specifies the distance and direction of the hole bottom in reference to the point R.

- R . . . . . Incremental command

  Specifies the distance and direction of the point R in reference to the initial point.

- Q . . . . . Specifies depth of cut per one infeed motion (G87).
- P . . . . . Specifies the period of dwell function executed at the hole bottom.

  P1500 → 1.5 sec
- F . . . . . Specifies feedrate.
- K . . . . . Specifies the number of repetitions.

  K1 . . . . . At the position specified in the block containing K1, hole machining cycle is executed once. (Omissible)

  K2 to K9999 . . . At the position specified in the block containing a K command, hole machining cycle is repeated by the specified number of times.
- (M68) . . . . . Spindle or spindle 1 brake clamp (C-axis clamp or C-axis clamp of spindle 1)

  Specify M68 to carry out heavy-duty cutting.

① In the F15 format, use address L to specify the number of repetitions.

② When the M68 command (spindle or spindle 1 brake clamp (C-axis clamp or C-axis clamp of spindle 1)) is specified, M68 is output before the start of operation 2 and M69 (spindle or spindle 1 brake unclamp (C-axis unclamp or C-axis unclamp of spindle 1)) is output at the completion of operation 5.

Dwell is executed for the time set for parameter No. 5111 after that.

17. **G22, G23** Setting Barrier to Define the Tool Entry Inhibited Zone

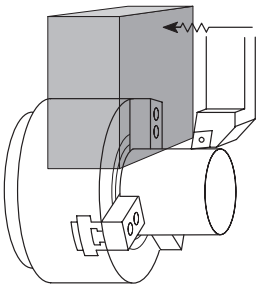

The function called by executing the G22 and G23 command is called the stored stroke check function.

When G22 command is executed, if a cutting tool enters to the pre-defined zone, the alarm message is displayed on the screen and the machine stops.

The G22 mode can be canceled by executing the G23 command.

To eliminate interference between the cutting tool and the chuck or a workpiece, set the tool entry inhibited zone using the G22 command.

NOTE The G22 and G23 commands are optional for MSC-500, MSC-501, MSC-518, MSG-501, MSD-501II, and MSD-518II.

COMMAND

G22 X_ Z_ I_ K_ ;
G23_ ;

- G22 . . . . . Turns on the stored stroke check function.
- G23 . . . . . Turns off the stored stroke check function.
- X, Z . . . . . Specifies the coordinate values of the point where the tool entry inhibited zone begins.
  To define the zone, use the distance from the machine zero point. That is, specify the coordinate values in the machine coordinate system which are displayed on the screen.
- I, K . . . . . Specifies the coordinate values of the point where the tool entry inhibited zone ends.
  To define the zone, use the distance from the machine zero point. That is, specify the coordinate values in the machine coordinate system which are displayed on the screen.

<Tool entry inhibited zone>

CAUTION

When using the stored stroke limit function, always execute a machine zero return operation after switching the power ON, otherwise the function will not be valid. If the machine is operated in this condition it will not stop even if the cutting tool enters the inhibited zone, and this could damage the machine.

NOTE

① When specifying the values for X, Z, I, and K to define the tool entry inhibited zone, the following rule must be followed.

- X > I, Z > K
- X – I > 2 mm, Z – K > 2 mm

To set the zone as illustrated below, for example:

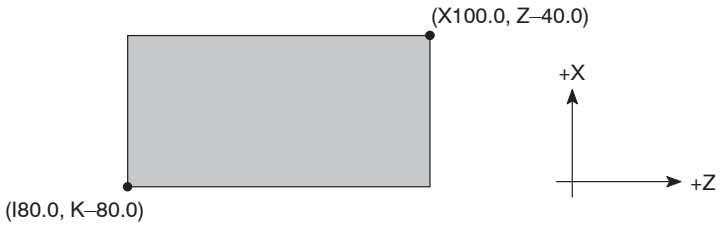

- X100.0 > I80.0
- Z–40.0 > K–80.0
- 100.0 – (80.0) = 20.0 > 2 mm
- –40.0 – (–80.0) = 40.0 > 2 mm

The above indicated conditions are satisfied and the required zone may be set.

② The tool entry inhibited zone is established “outside” or “inside” the specified zone. Where the tool entry inhibited zone is set “outside” or “inside” is determined by the setting for parameter No. 1300.0.

③ The G22 and G23 commands must be specified in a block without other commands.

④ If the same values are set for “X_ Z_” and “I_ K_” following the G22 command, the tool entry inhibited zone is not set.

⑤ Tool entry inhibited zone specified with G22 is set in parameters.

The value set in parameters are not lost even if the power is turned off.

Accordingly, unless canceled by G23, the G22 function is valid when the power is turned on.

If a cutting tool enters the tool entry inhibited zone specified with G22, an alarm is displayed on the screen and the machine stops.

In this case, the cutting tool can be moved only in the opposite direction in which the cutting tool has been moved.

The alarm state can be cleared by pressing the RESET (RESET) key on the operation panel after moving the cutting tool outside the tool entry inhibited zone manually.

Ex. **Programming using G22 and G23**

To set the zone as illustrated below.

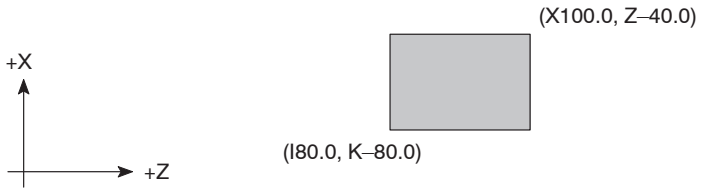


```
O0001;
N1;
G00 G28 U0 W0; ..... Machine zero return of the X- and Z-axes
G22 X100.0 Z–40.0 I80.0 K–80.0; .... Setting the tool entry inhibited zone as illustrated
                                     above
G50 S2000;
T0101;
     ⋮
     ⋮          Machining program
     ⋮
G23; ..... Canceling the tool entry inhibited zone
     ⋮
```

18. **G28** Returning the Axes to Machine Zero Automatically

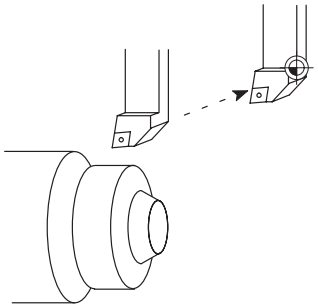

The G28 command is used to automatically return the axes specified in the G28 block to the machine zero point after positioning it at the specified intermediate point at a rapid traverse rate.

This command is used if the tool and/or tool holder interferes with the workpiece, chuck, or fixture while the turret is rotating, for mounting/removing a workpiece, or for removing chips.

COMMAND

G28 X(U)_ Z(W)_ ;

- G28 . . . Calls the machine zero return mode.
- X, Z . . . Specifies the axes which should be returned to the machine zero point. (absolute command)

NOTE Numerical values specified following the address X and Z indicate the coordinate values of the intermediate point.

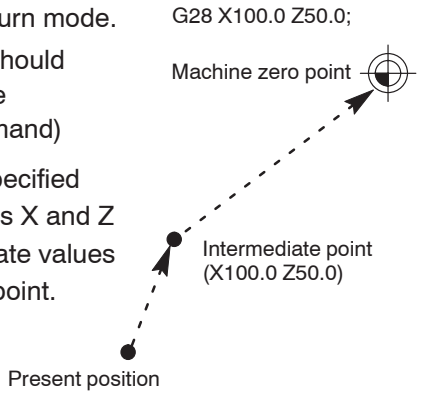

- U, W . . . Specifies the axes which should be returned to the machine zero point. (incremental command)

NOTE Numerical values specified following the address U and W indicate the distance and direction to the intermediate point.

CAUTION

Specify “G28 U0 W0;” to return the axes from the present position to the machine zero point by using the G28 command. If “G28 X0 Z0;” is specified, the axes first move to the workpiece zero point before returning to the machine zero point causing interference between the tool and the workpiece, which could cause damage to the machine.

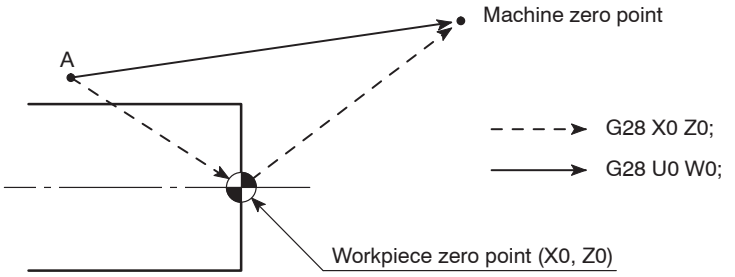

NOTE When the G28 command is specified, the tool offset and the automatic tool nose R offset functions are canceled.

Ex. **Programming using G28**

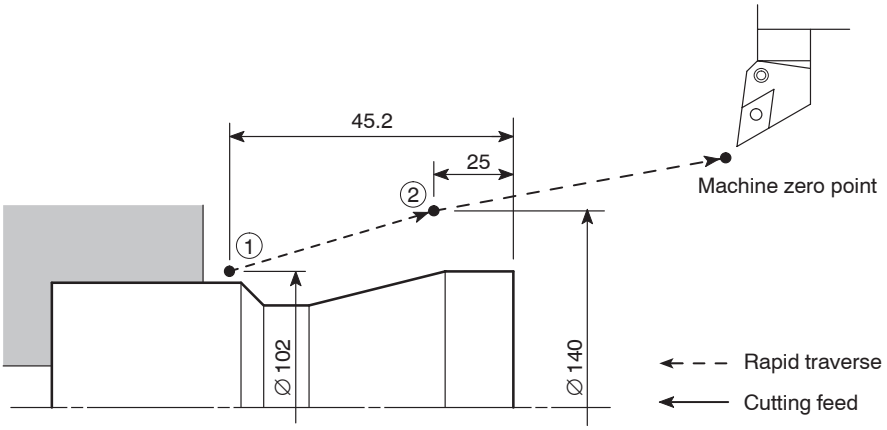


```
O0001;
N1;
G50 S2000;
G00 T0101;
     ⋮
     ⋮          Machining program
     ⋮
```

(G01) X102.0 Z–45.2; . . . . . Cutting up to ①

G28 X140.0 Z–25.0; . . . . . Returning of the X- and Z-axes to the machine zero point after positioning to the intermediate ② (X140.0, Z–25.0) at a rapid traverse rate

M01;

19. **G53** Selecting the Machine Coordinate System

The machine coordinate system means the coordinate system having its origin at the machine zero point of X- and Z-axes.

It is possible to move a cutting tool to a fixed position at rapid traverse by specifying the G53 command. Also specify the G53 command to retract the turret to the turret rotation position before finishing the machining.

NOTE The G53 command is optional for the SL-25E.

The machine coordinate values of the axes can be confirmed by the present position (machine coordinate) displayed on the screen.

COMMAND

G53 X_ Z_ ;

- G53 . . . . . Selects the machine coordinate system.
- X, Z . . . . . Specifies the coordinate values in the machine coordinate system.

NOTE

① The G53 command is a “00” group command.

The G53 command is one-shot code. It is valid only in the specified block.

② The G53 command is valid in the absolute programming mode. If it is specified in the incremental programming mode, it is ignored.

③ Before specifying the G53 command, cancel the automatic tool nose radius offset mode.

Ex. **Programming using G53**

To write a program assuming that the turret head rotation position is (X–50.0, Z–60.0) in the machine coordinate system.

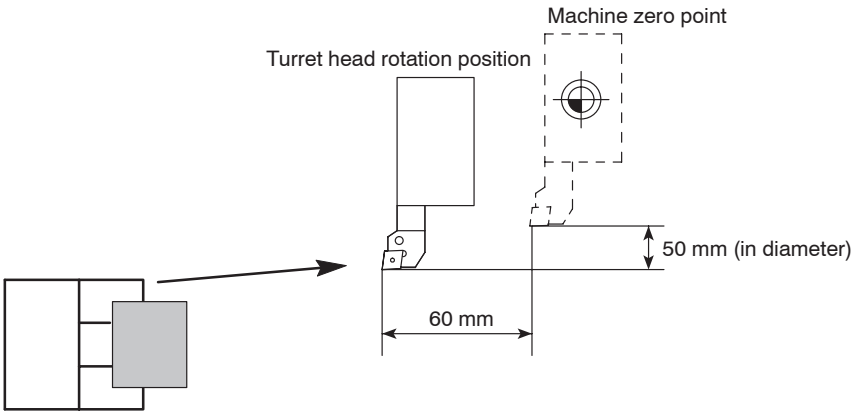


```
O0001;
N1;
G50 S2000;
G00 T0101;
G96 S180 M03;
      ⋮
      ⋮              Machining program
      ⋮
G00 U1.0 Z10.0 M09;
G53 X–50.0 Z–60.0; . . . . . Moving the tool at the position, –50 mm in the
                             X-axis direction and –60 mm in the Z-axis direction
M01;
```

20. **G54 - G59** Setting a Work Coordinate System

The work coordinate system has its origin at the workpiece zero point (X0, Z0).

The G codes (G54 to G59) are used to continuously carry out the first process and the second process operation.

NOTE The G54, G55, G56, G57, G58 and G59 commands are optional for the SL-25E.

For actual operation procedure, refer to the OPERATION MANUAL separately provided.

COMMAND

G54(G55, G56, G57, G58, G59) X_ Z_ ;

- G54 - G59 . . . . Select a work coordinate system.
- X, Z . . . . . Specifies the coordinate values of the point where positioning should be made in the selected work coordinate system (workpiece zero point).

NOTE When the power is turned on or when the RESET (RESET) key is pressed, the G54 work coordinate system is selected automatically.

Ex. **Programming positioning using a work coordinate system (G54 to G59)**

To carry out continuous operation of the first and second processes using the same chuck jaws and the same O.D. cutting tool.

1st process

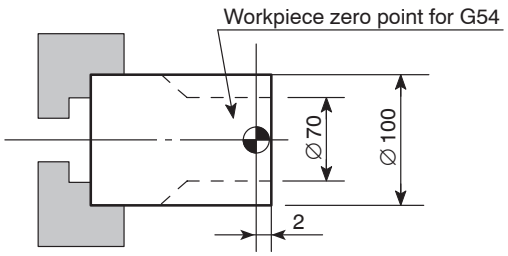

2nd process

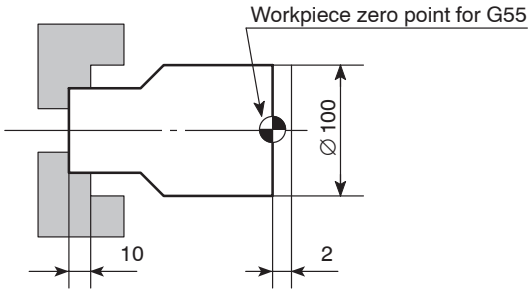

<Preparation>

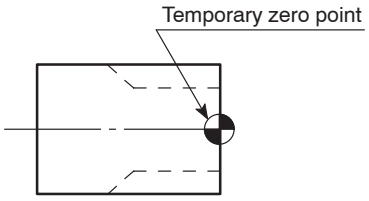

① Set the temporary zero point for the first process on the workpiece end face using the tool geometry offset function and the tool wear offset function.

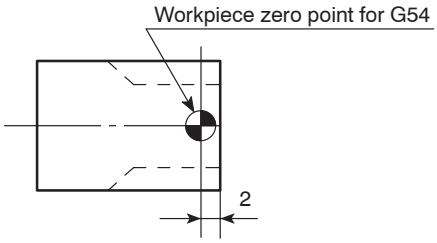

② Input the distance (2.0 mm) from the workpiece zero point in the G54 work coordinate system to the temporary zero point, measured along the Z-axis, to “Z” of 00 (EXT) displayed on the WORK COORDINATES screen.

The data input for “00 (EXT)” displayed on the WORK COORDINATES screen is applied to all the work coordinate systems called by the G54 to G59 commands.

In this example, the offset data for “00 (EXT)” is used without using the offset data for the G54 work coordinate system.

This is to make the “2.0 mm” offset data valid for the G55 work coordinate system as well.

③ Second process

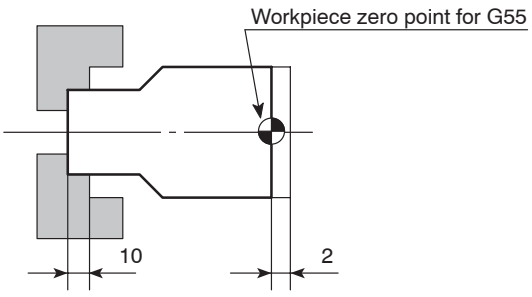

Input the sum of the Z-axis distance from the workpiece zero point of G55 to the workpiece end face (2.0 mm) and the chuck jaw shift amount (10.0 mm) to “Z” of “02 (G55)” in the WORK COORDINATES screen.

```
O0001;
N1;
G54; ..... Selecting the G54 work coordinate system
```

Although the offset data for the G54 work coordinate system is “0”, this call has the following effect:

– To use the offset data set for “00 (EXT)” in the WORK COORDINATES screen

– If the N1 block is called while the blocks following the N2 block are executed, the N1 program is executed in the G55 work coordinate system if the G54 command is not specified in the N01 block.

Therefore, specifying the G54 command in this block is necessary to ensure a safe operation.

```
G50 S2000;
G00 T0101; ..... Rotating the turret to index No. 1 tool
```

The workpiece zero point for the G54 work coordinate system is set by adding all the following offset data: tool offset data for No. 1 tool, tool offset data for the G54, and the offset data set for “00 (EXT)” in the WORK COORDINATES screen.

```
    ⋮
    ⋮        Machining program
    ⋮
M00; ..... Stopping the operation
```

Change or turn the workpiece.

```
N2;
G55; ..... Selecting the G55 work coordinate system
G50 S2000;
G00 T0101; ..... Rotating the turret to index No. 1 tool
```

The workpiece zero point for the G55 work coordinate system is set by adding all the following offset data: tool offset data for No. 1 tool, offset data for the G55, and the offset data set for data set for “00 (EXT)” in the WORK COORDINATES screen.

```
    ⋮
    ⋮        Machining program
    ⋮
M30;
```

21. **G38** Workpiece Pushing Check

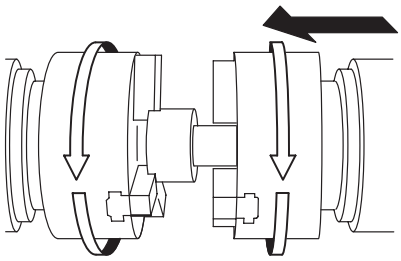

The G38 command is specified when transferring the workpiece clamped in chuck 1 to chuck 2.

In the workpiece transfer operation, when the position error of the B-axis servo motor of spindle 2 reaches the parameter set value, the workpiece is judged to have been brought into contact with the reference face of chuck 2. Then, chuck 2 is clamped and the program advances to the next block.

NOTE

① The G38 command can be specified only with the SL-S series.

② With the SL-S series machine equipped with the Y-axis, return the Y-axis and then the X-axis to the respective 3rd zero point when moving spindle 2 (B-axis) for transferring a workpiece from spindle 1 to spindle 2. If spindle 2 (B-axis) is moved although both the Y- and X-axes not returned to the 3rd zero point, the machine stops with the corresponding alarm message displayed on the screen. After returning spindle 2 (B-axis) to the machine zero point on completion of workpiece transfer, return the X- and Y-axes to the respective machine zero point in this order.

COMMAND

G38 B(J, V)_ K_ F_ Q_ ;

- G38 . . . . . Workpiece pushing check command
- B . . . . . Absolute command
  Specify the B-coordinate of workpiece transfer position on the work coordinate system.
- J . . . . . Incremental command
  Specify the distance and direction of the workpiece transfer position in reference to the preset position.
- V . . . . . Coordinate value on the machine coordinate system
  Specify the coordinate value of the workpiece transfer position on the machine coordinate system.
- K . . . . . B-axis retraction stroke (unsigned value)
  Specify the stroke through which the B-axis should retract from the position where pushing of a workpiece is detected.
- F . . . . . Feedrate (mm/min)
  Specify the feedrate for skip feed operation (pushing the workpiece to chuck 2).
- Q . . . . . Tolerance for workpiece transfer position
  If the actual workpiece pushing position known from the detection of workpiece pushing and retraction after detection of workpiece pushing is within the range of B (J, V) ± Q, the program advances to the next block.

CAUTION

This detection operation may cause low-strength workpieces such an aluminum workpieces to be deformed or damaged.

Feedrate for skip feed operation should be changed meeting the workpiece material and dimensions.

NOTE

① When address B is used to express the coordinate value of the workpiece transfer position, if no value is set for “B” of “00 (EXT)” in the WORK COORDINATES screen, it has the same meaning as “(B = 0), V”.

② If a K command is omitted, the B-axis is automatically retracted by the servo error amount in the uni-direction positioning mode.

③ If a K command is specified, servo error is not calculated and the B-axis is retracted by the specified amount.

In this case, retraction is not made in the uni-direction positioning mode.

④ Change the value for a K command according to the strength of the workpiece.

⑤ If an F command is omitted in a program, default value of 30 mm/min is used.

⑥ If the actual B-axis position after retraction from the workpiece pushing detected position is outside the specified tolerance “B (J, V) ± Q”, the pushing detection cycle is repeated again. If the B-axis is not positioned within the tolerance, an alarm is generated and the machine stops.

⑦ If a Q command is omitted, the tolerance for workpiece transfer position is 1 mm.

⑧ The approach point to be specified preceding the G38 command should be taken at a point where the chuck 2 takes more than 1 second to come into contact with the workpiece.

⑨ For specifying the workpiece transfer position, use any one of the addresses B, J, and V.

⑩ The chuck to workpiece contact position cannot be judged if the feed override setting is changed after executing the G38 block with 0% set for feed override. It is necessary to set a value other than 0% for feed override when executing the G38 block. It must also be remembered it is not allowed to change the feed override setting during the execution of the G38 block.

EX.

Programming using G38

To transfer a workpiece machined in spindle 1 from spindle 1 to spindle 2

In the workpiece transfer operation, pushing of the workpiece against the chuck is checked.

```
O0001;
N1;
    ⋮
    ⋮          Machining program
    ⋮          (machining of a workpiece in spindle 1)
```

N5;

G59; . . . . . Selecting the G59 work coordinate system (for workpiece transfer)

G97 S1000 M03; . . . . . Starting spindle 1 in the normal direction at 1000 min^{-1}

M35; . . . . . Specifying the speed synchronized operation mode

M211; . . . . . Unclamping chuck 2

(G30 P3 V0;) . . . . . Returning the Y-axis to the 3rd zero point

(G30 P3 U0;) . . . . . Returning the X-axis to the 3rd zero point

G00 B_ ; . . . . . Moving headstock 2 to the approach position B_ (work coordinate system) (First approach)

G98 G01 B_ F1000; . . . . . Approaching of headstock 2 to workpiece at the feedrate of 1000 mm/min (Second approach)

G38 J_ K_ F_ Q_ ; . . . . . Detecting the pushing of workpiece

NOTE Chuck 2 clamp operation is included.

G99; . . . . . Specifying the feed per revolution mode

⋮

⋮ Machining program

⋮ (Cutting off of workpiece)

M36; . . . . . Canceling the speed synchronized operation mode

G54; . . . . . Selecting the G54 work coordinate system

G28 B0; . . . . . Returning the B-axis (spindle 2) to the machine zero point

(G28 U0;) . . . . . Returning the X-axis to the machine zero point

(G28 V0;) . . . . . Returning the Y-axis to the machine zero point

M01;

⋮

NOTE Commands in ( ) can be specified only for the Y-axis specification SL-S series.

22. **G07.1 (G107)** Cylindrical Interpolation

Using the cylindrical interpolation function, programming for grooving on cylinder circumference can be made assuming a plane by developing the cylinder circumference into the plane.

In other words, the cylindrical interpolation function permits a profile on the cylinder circumference to be programmed in the profile on a plane.

NOTE The G07.1 (G107) command can be used only with the MC type or Y-axis specification machines. With the models other than MC type and Y-axis specification, these G codes cannot be used.

COMMAND

G07.1(G107) C_ ;

- G07.1(G107) . . . Calls the cylindrical interpolation mode.
- C . . . . . Specifies the radius of the workpiece (groove bottom)

NOTE

① In the cylindrical interpolation mode, I, J and K cannot be used to define an arc.

Circular arc radius must be specified using R. The unit of R command is “mm”.

⋮

G02 Z_ C_ **R4.0;** (radius 4 mm)

② In the cylindrical interpolation mode, hole machining canned cycle (G83 - G85, G87 - G89) cannot be specified.

③ When “G07.1(G107) C0;” is specified, the cylindrical interpolation mode is canceled.

④ If circular interpolation, cutter radius offset, or automatic tool nose radius offset is specified in the cylindrical interpolation mode, it is necessary to specify the plane for machining.

⑤ If the cylindrical interpolation is specified in the cutter radius offset mode or the automatic tool nose radius offset mode, the offset is not executed correctly.

⑥ To execute the cutter radius offset function or the automatic tool nose radius offset function in the cylindrical interpolation mode, cancel the cutter radius offset function or the automatic tool nose radius offset function before calling the cylindrical interpolation mode and specify the cutter radius offset function or the automatic tool nose radius offset function after calling the cylindrical interpolation mode.

⑦ It is not possible to execute positioning in the cylindrical interpolation mode. To execute positioning, the cylindrical interpolation mode must be canceled.

⑧ It is not possible to specify a work coordinate system (G50, G54 - G59), a local coordinate system (G52), and a machine coordinate system (G53) in the cylindrical interpolation mode.

⑨ It is not possible to specify the G07.1 (G107) command in the positioning mode (G00).

NOTE ⑩ With the SL-S series, the cylindrical interpolation function can be used for spindle 2 in addition to spindle 1. If the cylindrical interpolation function is used in the operation at spindle 2, pay attention to the “+/–” direction of the Z- and C-axes.

Concerning the “+/–” direction of the Z- and C-axis, refer to page A–13 (7.1.2).

Ex. **Programming using G07.1 (G107)**

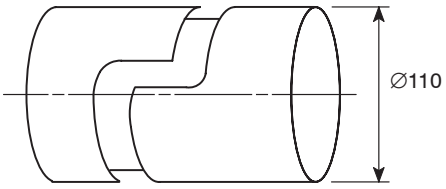

Fig. 1

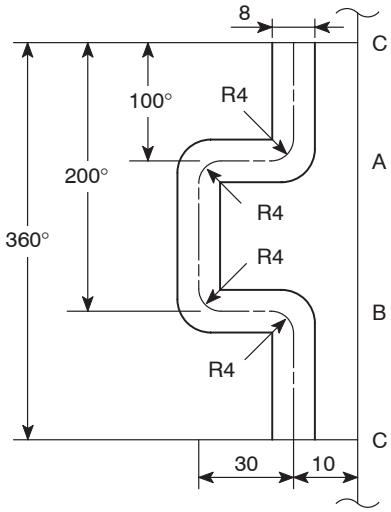

Fig. 2

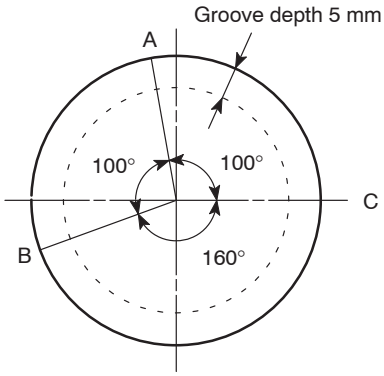

Fig. 3

NOTE

① Fig. 2 is a development of Fig. 1. The angle in Fig. 2 indicates the angle made to the center of the cylinder as shown in Fig. 3.

② Command point for cylindrical interpolation is obtained from the development of the circumference of the cylindrical shape (Fig. 2).

③ The development of the cylinder circumference (Fig. 2) is given in the ZC plane.

④ Command points of the shape in Fig. 2 are expressed by ● in Fig. 4.

After selecting the cylindrical interpolation mode with the G07.1 (G107) command, specify the command points ● in order.

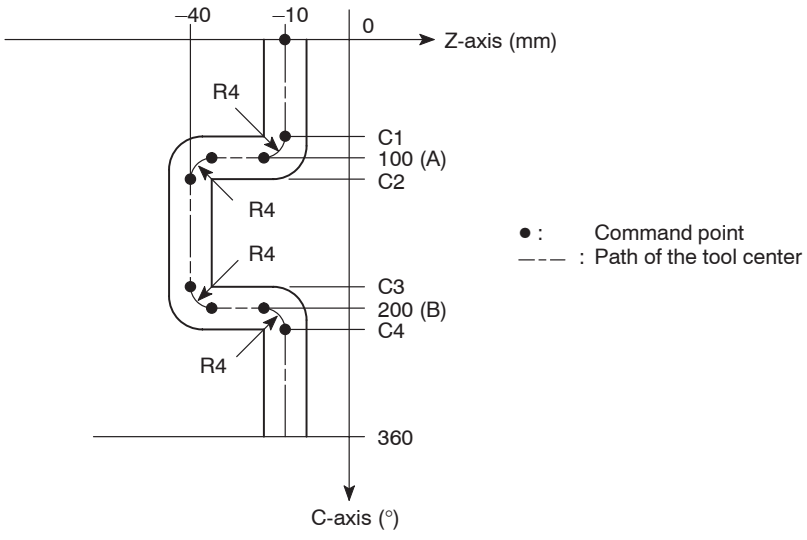

Fig. 4

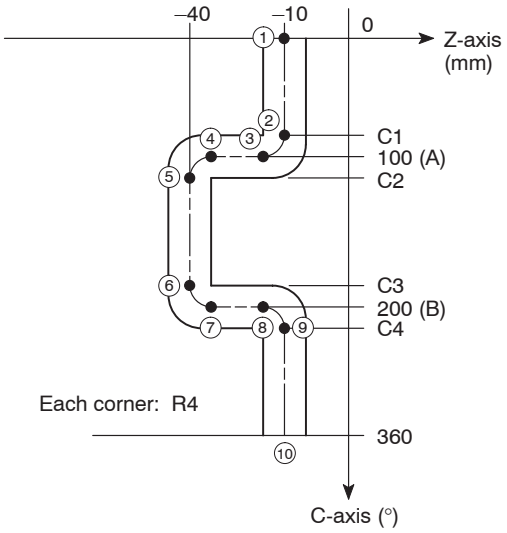

Fig. 5

Command values of points ① to ⑩ in Fig. 5 are indicated below.

Command Point	Z (mm)	C (°)
①	–10	0
②	–10	C1
③	–14	100
④	–36	100
⑤	–40	C2
⑥	–40	C3
⑦	–36	200
⑧	–14	200
⑨	–10	C4
⑩	–10	360

It is possible to create a program if values C1 - C4 are known.

The radius of corners in the tool path is 4.0 mm.

First obtain the values C1 - C4 in “mm” before obtaining them in angles (°).

For this calculation, A (100°) and B (200°) should be converted into “mm”.

Circumference of the workpiece:

$\varnothing 100 \times \pi = 314.1593$ (mm)

This means 314.1593 (mm) corresponds to 360°.

A (100°): $314.1593 \times \frac{100}{360} = 87.266$ (mm)

B (200°): $314.1593 \times \frac{200}{360} = 174.533$ (mm)

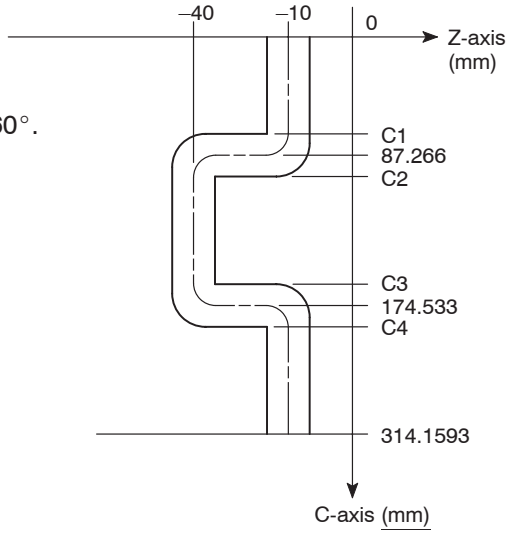

Fig. 6

Next, calculate values C1 - C4 in “mm”.

C1: 87.266 − 4 = 83.266 (mm)

C2: 87.266 + 4 = 91.266 (mm)

C3: 174.533 − 4 = 170.533 (mm)

C4: 174.533 + 4 = 178.533 (mm)

For cylindrical interpolation, it is necessary to specify the C-axis value in angles.

Convert C1 - C4 into the unit of “°” (angle).

C1: 360°: 314.1593 (mm) = C1°: 83.266 (mm)

C1° = 95.416°

C2: 360°: 314.1593 (mm) = C2°: 91.266 (mm)

C2° = 104.583°

C3: 360°: 314.1593 (mm) = C3°: 170.533 (mm)

C3° = 195.416°

C4: 360°: 314.1593 (mm) = C4°: 178.533 (mm)

C4° = 204.584°

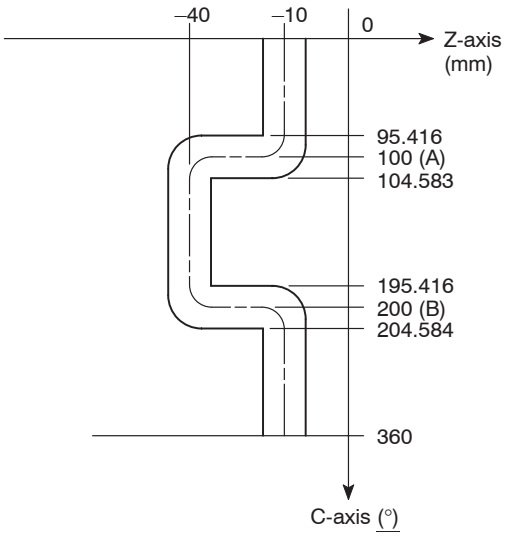

Fig. 7

```
O0001;
N1;
M45;
G28 H0;
G00 T0101;
G97 S100 M13;
X115.0 Z–10.0 S500; ..... ①
G98 G01 X100.0 F50; ..... ②
G19 W0 H0; ..... ③
G07.1(G107) C50.0; ..... ④
C95.416; ..... ⑤
G02 Z–14.0 C100.0 R4.0; ..... ⑥
G01 Z–36.0; ..... ⑦
G03 Z–40.0 C104.583 R4.0; ..... ⑧
G01 C195.416; ..... ⑨
G03 Z–36.0 C200.0 R4.0; ..... ⑩
G01 Z–14.0; ..... ⑪
G02 Z–10.0 C204.584 R4.0; ..... ⑫
G01 C360.0; ..... ⑬
G07.1(G107) C0; ..... ⑭
X115.0;
G00 G99 X200.0 Z100.0 M05;
G18 M46;
M01;
```

① Positioning to the point where grooving is started

② Starting of the grooving

Feedrate is 50 mm/min, specified in the G98 (feed per minute) mode.

③ Selecting the machining plane (ZC plane)

When specifying circular command (G02 or G03) between the rotary axis (C-axis) and linear axis (Z-axis) in the cylindrical interpolation mode, it is necessary to select a plane.

If the Z- and C-axis movements are not required, specify as “G19 W0 H0;”. This is necessary because Z- and C-axis commands must be specified after the G19 command.

④ Calling the cylindrical interpolation mode

As the diameter of the workpiece (groove bottom) is 100 mm, the cylinder radius is 50 mm.

⑤ - ⑬ Machining is carried out by synchronizing spindle rotation (C-axis indexing) and Z-axis movement.

⑭ Canceling the cylindrical interpolation mode

23. G12.1 (G112), G13.1 (G113) Notching (Polar Coordinate Interpolation)

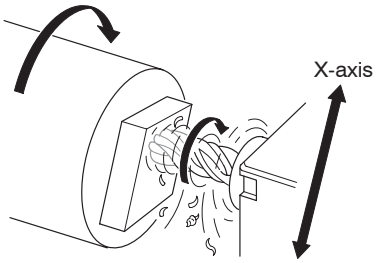

The notching means a cutting of the workpiece face in contour shape.

After starting the rotary tool, specify the G12.1 (G112) command to select polar coordinate interpolation mode.

It is possible to synchronize the spindle revolution (slow speed) with X-axis feedrate of the rotary tool in the polar coordinate interpolation mode.

NOTE The G12.1 (G112) and G13.1 (G113) commands can be used only with the MC type or Y-axis specification machines. With the models other than MC type and Y-axis specification, these G codes cannot be used.

COMMAND

G12.1(G112); . . . . . Calls the polar coordinate interpolation mode.

G13.1(G113); . . . . . Cancels the polar coordinate interpolation mode.

NOTE

① In the polar coordinate interpolation mode, X-axis value should be specified in diameter and C-axis value should be specified in "mm" in radius, not in "°" (angle).

② The G12.1 (G112) and G13.1 (G113) commands must be specified in a block without other commands.

③ Set the linear axis and the rotary axis to be used for polar coordinate interpolation for parameters. This setting has been made at the shipping of the machine.

Linear axis: Generally, X-axis is set.

Parameter No. 5460 1

Rotary axis: Generally, C-axis is set.

Parameter No. 5461 3

NOTE

④ When an arc cutting is executed in the polar coordinate interpolation mode, addresses to indicate the arc radius are determined according to the axis name of the linear axis.

If the X-axis is taken as the linear axis:
. . . . . Since circular interpolation is assumed to be executed in the XY plane, addresses I and J are used to specify the arc radius. (Initial setting)

If the Y-axis is taken as the linear axis:
. . . . . Since circular interpolation is assumed to be executed in the YZ plane, addresses J and K are used to specify the arc radius.

If the Z-axis is taken as the linear axis:
. . . . . Since circular interpolation is assumed to be executed in the ZX plane, addresses I and K are used to specify the arc radius.

Note an arc radius may be specified using address R.

⑤ In the polar coordinate interpolation mode, never change the coordinate system (G50, G52, G53, G54 - G59, etc.).

⑥ In the polar coordinate interpolation mode, the G00 command cannot be specified. Only the following G codes can be specified.

G01, G02, G03, G04, G40, G41, G42, G65, G66, G67, G98, and G99

⑦ In the cutter radius offset mode or the automatic tool nose radius offset mode, the G12.1 (G112) and G13.1 (G113) commands cannot be specified.

Before specifying the G12.1 (G112) or G13.1 (G113) command, cancel the cutter radius offset mode or the automatic tool nose radius offset mode.

⑧ For “X” of the OFFSET/GEOMETRY screen, set the distance from the center of spindle to the center of a rotary tool with the turret returned to the zero point. For “R” of the OFFSET/GEOMETRY screen, set the radius of the rotary tool.

⑨ With the SL-S series, the polar coordinate interpolation function can be used for spindle 2 in addition to spindle 1. If the polar coordinate interpolation function is used in the operation at spindle 2, pay attention to the “+/–” direction of the Z- and C-axis.

Concerning the “+/–” direction of the Z- and C-axis, refer to page A–13 (7.1.2).

Ex. **Programming using G12.1 (G112) and G13.1 (G113)**

Notching to machine 50 mm × 50 mm square (A → B → C → D → E → A) using the 20 mm dia. end mill

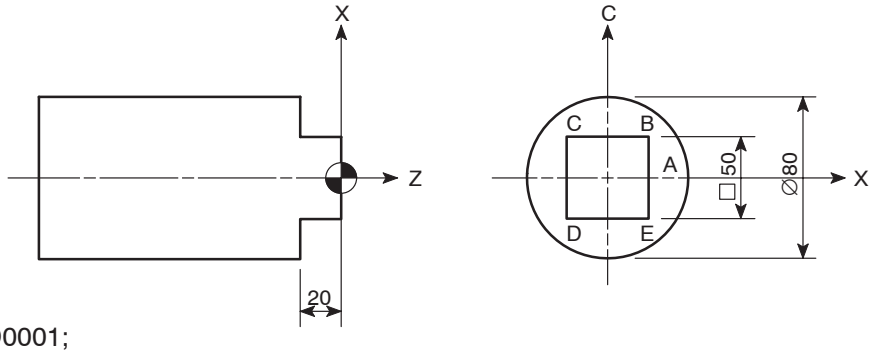


```
O0001;
N1;
M45;
G28 H0;
G00 T0101;
G97 S100 M13; ..... ①
X80.0 Z30.0 S100; ..... ②
G98 G01 Z–20.0 F100; ..... ③
G12.1(G112); ..... ④
G42 X50.0; ..... ⑤ A
C25.0; ..... ⑥ B
X–50.0; ..... ⑦ C
C–25.0; ..... ⑧ D
X50.0; ..... ⑨ E
C0; ..... ⑩ A
G40 X100.0; ..... ⑪
G13.1(G113); ..... ⑫
    ⋮
```

② Positioning to the point where notching is started

③ Cutting into Z–20.0

④ Calling the polar coordinate interpolation mode

The spindle rotates synchronized with the feedrate of the cutting tool.

⑤ - ⑩ Cutting in the order of A → B → C → D → E → A

In approach to point Ⓐ, the automatic tool nose radius offset function is turned on.

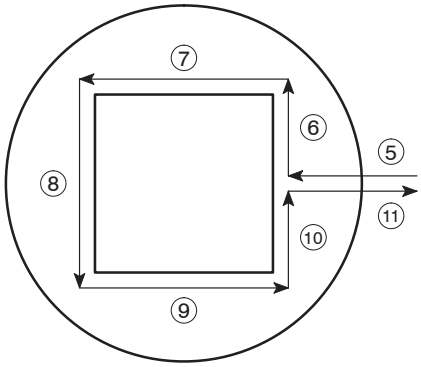

⑪ Canceling the automatic tool nose radius offset function; the cutting tool is retracted to X100.0.

⑫ Canceling the polar coordinate interpolation mode

24. **G479** Tailstock Connect

If G479 V_ is specified in center-work operation, the Z-axis (saddle) automatically moves to the tailstock connection position, and after the tailstock is connected to the saddle, the saddle moves to the specified positioning point (V_).

NOTE The G479 command can be used only with the programmable tailstock specification machine.

COMMAND

G479 V_ ;

- G479 . . . . . Calls the tailstock connect mode.
- V . . . . . Specifies the tailstock positioning point (coordinate value in the machine coordinate system)

NOTE
① Specify the G479 command independently in a block without other commands.

② Specify the coordinate value of the tailstock positioning point (V) in the machine coordinate system.

③ For address V, specify a numeric value with a decimal point.

④ If address V is omitted, the Z-axis only travels to the tailstock/saddle connection position. Therefore, the commands for unclamping the tailstock body, positioning it at the required position, and clamping the tailstock body must be given.

```
    ⋮
G479; . . . . . Moving the Z-axis to the tailstock/saddle
                connection position
M79; . . . . . Unclamping the tailstock body
G00 Z_ ; . . . . . Positioning the tailstock body at the required
                position
M78; . . . . . Clamping the tailstock body
    ⋮
```

NOTE To execute the G479 command, the following conditions must be satisfied:

– The main spindle or the rotary tool spindle is stopped.

– The turret head index has completed.

– The tailstock spindle is in the IN position.

During setup operation, it is recommended to record the position(s) where the tailstock should be positioned and the position where the tailstock should be returned after the completion of machining. The coordinate values must be specified in the machine coordinate system.

<Operation flow chart for G479>

By specifying a V command that indicates the required tailstock positioning point, following G479, a series of tailstock positioning operation is executed as indicated below by the macro program.

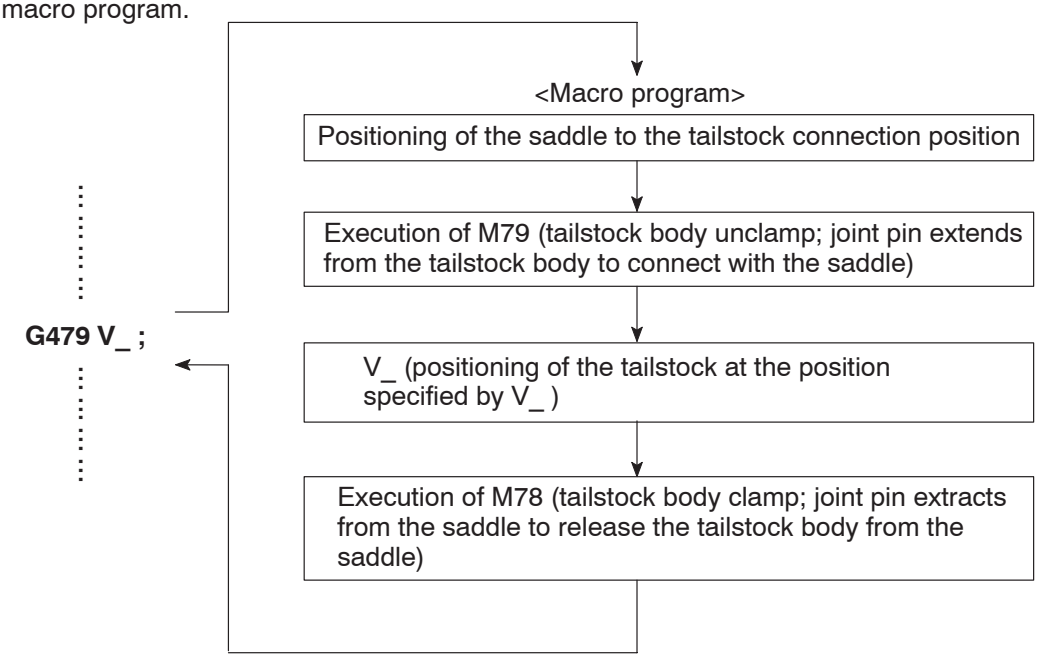

Ex. **Programming using G479**

O0001;
N1;
G479 V_ ; . . . . . Moving the tailstock to the position specified by V_ (machine coordinate value)
M25; . . . . . The tailstock spindle moves OUT to hold the workpiece by the tailstock spindle center.
G04 U_ ; . . . . . Calling for dwell to allow positive support of the workpiece by the tailstock spindle center
G50 S1000;
G00 T0101;
G96 S100 M03;
⋮ Machining program
G28 U0; . . . . . Machine zero return of X-axis to avoid interference with the tailstock
M05;
M26; . . . . . The tailstock spindle moves IN.
G04 U_ ; . . . . . Calling for dwell to allow tailstock spindle to correctly extract into the tailstock body
G479 V_ ; . . . . . Moving the tailstock to the previously located position, specified by V_ (machine coordinate value)
⋮

APPENDIX 1 Workpiece Transfer

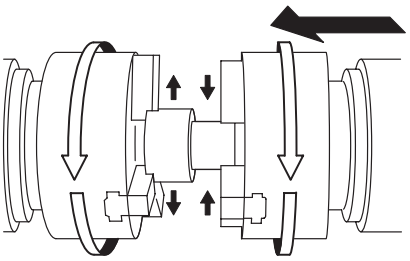

To continuously carry out the first process and second process in a single set up, the workpiece for which the first process has been finished must be passed to chuck 2 where the second process is carried out.

The operation is called “workpiece transfer”.

To transfer a workpiece from chuck 1 to chuck 2, it is necessary to move spindle 2 (B-axis) to the workpiece transfer position.

When moving spindle 2 (B-axis) to the workpiece transfer position, it is possible to use a work coordinate system.

The following explains the program to be used for the positioning of spindle 2 (B-axis) using the work coordinate system.

CAUTION

When moving spindle 2 (B-axis), move the turret to the position where interference will not occur between spindle 2 and tools, tool holders, and/or turret. If spindle 2 is moved carelessly, interference will occur with tools, tool holders, and/or turret, which could cause damage to the machine.

NOTE

① Workpiece transfer is possible only by the SL-S series.

② With the SL-S series machine equipped with the Y-axis, return the Y-axis and then the X-axis to the respective 3rd zero point when moving spindle 2 (B-axis) for transferring a workpiece from spindle 1 to spindle 2. If spindle 2 (B-axis) is moved although both the Y- and X-axes not returned to the 3rd zero point, the machine stops with the corresponding alarm message displayed on the screen. After returning spindle 2 (B-axis) to the machine zero point on completion of workpiece transfer, return the X- and Y-axes to the respective machine zero point in this order.

For the procedure used to set a work coordinate system, refer to the OPERATION MANUAL separately provided.

1.1 Work Coordinate System

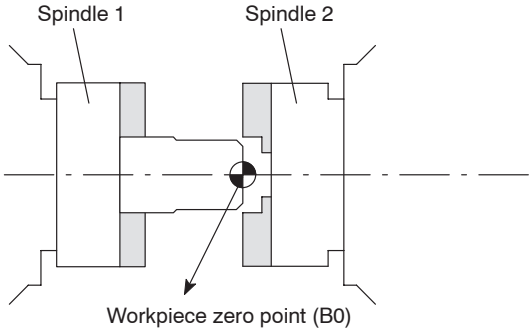

To carry out positioning of spindle 2 (B-axis) in the work coordinate system, set the coordinate value of the workpiece approach point to “B” of NO.00 (EXT) on the WORK COORDINATES screen.

Write a program taking this point as “B0”.

CAUTION

Do not set the workpiece transfer position to “B” of NO. 00 (EXT) work coordinate system, on the WORK COORDINATES screen.

If the workpiece transfer position is set to “B” of NO. 00 (EXT) work coordinate system, a work coordinate system called up in a program is shifted by the set value to cause interference between a tool, tool holder and the turret, and a workpiece, chuck and the fixture, which could cause damage to the machine.

NOTE

When setting the workpiece transfer position on the WORK COORDINATES screen, select the work coordinate system that is used only for workpiece transfer operation.

COMMAND

G00 B_ ;

- B . . . . . Specifies the approach position for workpiece transfer operation (on work coordinate system). (absolute command)

NOTE

For the B-axis, an incremental command cannot be used.

Ex. **Workpiece transfer commands (work coordinate system)**

To transfer a workpiece machined in spindle 1 from spindle 1 to spindle 2

In this workpiece transfer operation, B-axis is moved to the workpiece transfer position by using the work coordinate system (G59).

```
O0001;
N1;
    ⋮
    ⋮          Machining program
    ⋮          (machining of a workpiece in spindle 1)
N5;
G59; ..... Selecting the G59 work coordinate system
           (for workpiece transfer)
G97 S1000 M03; ..... Starting spindle 1 in the normal direction at
                     1000 min−1
M35; ..... Specifying the speed synchronized operation
           mode
M211; ..... Unclamping chuck 2
(G30 P3 V0;) ..... Returning the Y-axis to the 3rd zero point
(G30 P3 U0;) ..... Returning the X-axis to the 3rd zero point
G00 B_ ; ..... Moving headstock 2 to the approach position B_
              (work coordinate system)
              (First approach)
G98 G01 B_ F1000; ..... Approaching of headstock 2 to workpiece at the
                        feedrate of 1000 mm/min
                        (Second approach)
G38 J_ K_ F_ Q_ ; ..... Detecting the pushing of workpiece
```

NOTE Chuck 2 clamp operation is included.

```
G99; ..... Specifying the feed per revolution mode
    ⋮
    ⋮          Machining program
    ⋮          (Cutting off of workpiece)
M36; ..... Canceling the speed synchronized operation mode
G54; ..... Selecting the G54 work coordinate system
G28 B0; ..... Returning the B-axis (spindle 2) to the machine
              zero point
(G28 U0;) ..... Returning the X-axis to the machine zero point
(G28 V0;) ..... Returning the Y-axis to the machine zero point
M01;
    ⋮
```

NOTE Commands in ( ) can be specified only for the Y-axis specification SL-S series.

APPENDIX 2 **G65 P9020/G65 P9021** Workpiece Transfer Macro Program (MSD-501II)

A workpiece is transferred from spindle 1 to spindle 2 when G65 P9020 or G65 P9021 is executed. It is also possible to pull out or cut off a bar material together with the transfer from spindle 1 to spindle 2 if the machine is equipped with a bar feeder.

Differences between G65 P9020 and G65 P9021 are shown below.

G65 P9020 . . . . . M70 is not output when pulling out a workpiece by spindle 2.

G65 P9021 . . . . . M70 is output at the same time a workpiece is pulled out by spindle 2.

Usually, “G65 P9020” is used. “G65 P9021” is used only when the output of M70 is required.

① “G65 P9020/G65 P9021” can be specified only for the SL-S series equipped with the CAPII automatic conversational programming function. The CAPII automatic conversational programming function is available only for the MSD-501II and the MSD-518II, and also the MSG-501 for which CAPII is specified as the automatic conversational programming function.

② The tool at station No. 1 is called when “G65 P9020/G65 P9021” is executed. Therefore, move the turret to a position where it will not interfere with spindle 2 before executing “G65 P9020/G65 P9021”. The cut-off tool must be mounted at station No. 1.

③ Although “G65 P9020/G65 P9021” transfers a workpiece from spindle 1 to spindle 2, it is not possible to return a workpiece from spindle 2 to spindle 1 by executing these commands.

④ After the completion of “G65 P9020/G65 P9021”, the X-axis moves to the machine zero point and the Z-axis returns to the position where the Z-axis existed before the execution of “G65 P9020/G65 P9021”.

⑤ “G65 P9021” may be used only for the machine equipped with a bar feeder.

COMMAND

G65 P9020 A_ B_ C_ J_ K_ Q_ E_ M_ D_ S_ Y_ Z_ X_ H_ F_ R_ U_ I_ V_ W_ ;
G65 P9021 A_ B_ C_ J_ K_ Q_ E_ M_ D_ S_ Y_ Z_ X_ H_ F_ R_ U_ I_ V_ W_ ;

- G65 P9020 . . . Workpiece transfer command
- G65 P9021 . . . Workpiece transfer command (with M70 output)
- A . . . . . Spindle synchronization mode
  - A0. . . . Speed synchronization (spindle stop, normal rotation for cut-off)
  - A1. . . . Phase synchronization (spindle stop, normal rotation for cut-off)
  - A2. . . . Speed synchronization (spindle normal rotation, normal rotation for cut-off)
  - A3. . . . Phase synchronization (spindle normal rotation, normal rotation for cut-off)
  - A4. . . . Speed synchronization (spindle stop, reverse rotation for cut-off)
  - A5. . . . Phase synchronization (spindle stop, reverse rotation for cut-off)
  - A6. . . . Speed synchronization (spindle reverse rotation, reverse rotation for cut-off)
  - A7. . . . Phase synchronization (spindle reverse rotation, reverse rotation for cut-off)

  NOTE If designation of address A is omitted, “A0.” synchronization mode (speed synchronization; spindle stop, normal rotation for cut-off) is assumed.
- B . . . . . Approach position “b” of spindle 2 for workpiece transfer (“b”: Specified by the coordinate value in the machine coordinate system)

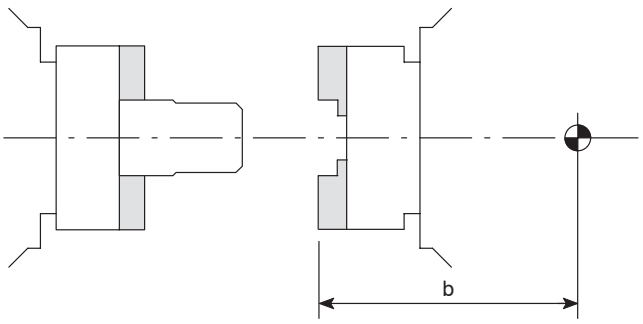

- C . . . . . Workpiece transfer position “c” of spindle 2
  (“c”: Specified by the coordinate value in the machine coordinate system)

  NOTE Spindle 2 moves from the approach position to the transfer position at the feedrate of 1500 mm/min (60 in./min).

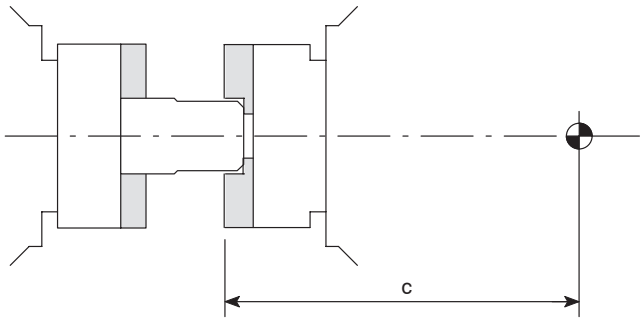

- J . . . . . Pushing stroke “j”
  In the movement of spindle 2 from the approach position to the transfer position, the mode of movement is changed at the position “j” (distance specified by “J”) away from the transfer position to M81 (motor torque reduced mode). Within this range, movement of spindle 2 is controlled with the motor deviation monitored to execute G38 (detecting pushing of a workpiece).

  NOTE
  ① If address J is omitted or “J0.” is specified, workpiece pushing detection is not executed.

  ② Within the pushing stroke “j”, spindle 2 moves at the feedrate that would be valid if an F command is not specified in the G38 block.

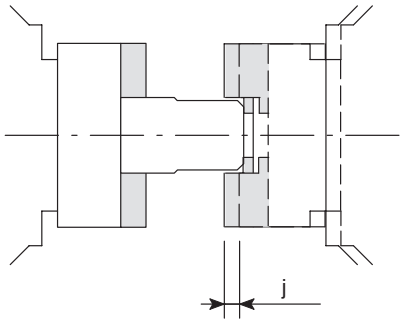

- K . . . . . Push-return stroke
  To eliminate distortion of a workpiece caused by pushing with spindle 2, spindle 2 returns by the amount specified here from the position where workpiece pushing is detected.

  NOTE If a negative value is specified for address K, G38 is not executed but spindle 2 moves at the feedrate of 300 mm/min (12 in./min) by the pushing stroke specified by address J.

- Q . . . . . Allowable maximum error for workpiece transfer position
  Specify the allowable maximum error between the actual workpiece contact position detected by the workpiece pushing operation and the workpiece transfer position specified in the program.

  NOTE If the workpiece contact detected position does not fall within the range defined by the set value, workpiece pushing operation is executed again. If the workpiece contact detected position is still outside the specified range, an alarm occurs and the machine stops.

- E . . . . . Dwell time for air blow executed at the approach position

  NOTE If address E is omitted or “E0.” is specified, dwell is not executed during air blow.

- M . . . . . Spindle speed applied for workpiece transfer (min^{-1})

  NOTE If address M is omitted, the spindle rotates at 300 min^{-1} during workpiece transfer.

- D . . . . . Workpiece pulling-out length “d” for cutting-off
  Specify the length of the workpiece to be pulled out after it is clamped in the chuck on spindle 2.

  NOTE The workpiece is pulled out at the feedrate of 1500 mm/min (60 in./min) after it is clamped in chuck 2.

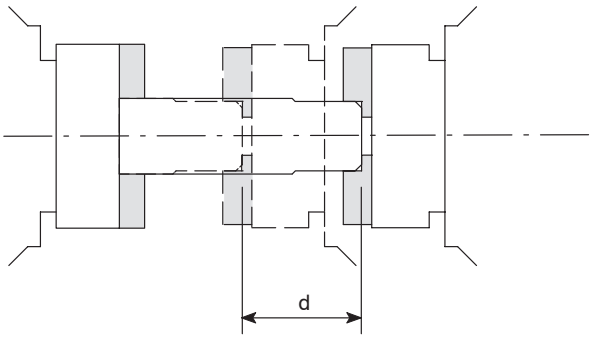

- S . . . . . Cutting speed (surface speed) for cutting-off operation (m/min)

  NOTE If address S is omitted, spindle speed is controlled in the constant spindle speed mode; cutting off is executed at the spindle speed specified with address Y.

- Y . . . . . Maximum spindle speed (min^{-1}) and coolant discharge for cutting-off operation

  NOTE If a negative value is specified, coolant is not discharged during cutting off.

- Z . . . . . Z coordinate value of the cutting-off start position
- X . . . . . X coordinate value of the cutting-off start position

  NOTE
  ① For address X, specify a value including the clearance amount for approach to the workpiece.

  ② A cutting-off tool approaches to the cut-off start position in the order of Z- and X-axes.

- H . . . . . X coordinate value of the point where cutting at the lowered feedrate ends, if intermittent cutting occurs at the engagement of a cutting-off tool with the workpiece.
- F . . . . . Lowered feedrate (mm/rev) to be applied if intermittent cutting occurs at the engagement of a cutting-off tool with the workpiece.
- R . . . . . X coordinate value of the point where cutting-off feedrate is lowered before the workpiece is cut off.
- U . . . . . Feedrate (mm/rev) to be applied for cutting-off operation up to the position where the feedrate is lowered.
- I . . . . . Depth of cut per pecking operation
  If address I is specified, cutting-off is performed in peck-feed operation in the range from the position specified by address H to the position specified by address R.

  NOTE
  ① If address I is omitted or “I0.” is specified, peck-feed is not used in cutting off operation.

  ② If addresses R and U are omitted, address I is invalid.

  ③ If address H is omitted, cutting from the position specified by address X to the position specified by address R is performed in peck-feed.

- V . . . . . X coordinate value of the cutting-off end position

  NOTE
  For address V, specify a value including the clearance amount beyond the cutting-off complete position.

- W . . . . . Feedrate (mm/rev) to be applied for axis feed up to the position where cutting-off operation is completed.

NOTE
① After the execution of cutting-off, cutting-off check cycle is always executed.

② For addresses used in the G65 P9020/G65 P9021 macro program, all values must have a decimal point.

Ex. **Programming using “G65 P9020”**

To transfer a workpiece machined in spindle 1 from spindle 1 to spindle 2

NOTE ① Move the turret to a position where the turret will not interfere with spindle 2 before executing “G65 P9020”.

② “Workpiece pushing check” and “cutting off” are not executed by the program shown below.

```
O0001;
N1;
    ⋮
    ⋮          Machining program (machining of a workpiece in spindle 1)
    ⋮
N5;
(G30 P3 V0;) ..... Returning the Y-axis to the 3rd zero point
(G30 P3 U0;) ..... Returning the X-axis to the 3rd zero point
G65 P9020 A2. B–_ C–_ E2.0;
 ..... Specifying the workpiece transfer command
```

- A2. ..... Spindle synchronization mode (spindle normal rotation)
- B–_ ..... Approach position for workpiece transfer (coordinate value in the machine coordinate system)
- C–_ ..... Workpiece transfer position (coordinate value in the machine coordinate system)
- E2.0 ..... Dwell time of 2 seconds for air blow executed at the approach position

```
(G28 V0;) ..... Returning the Y-axis to the machine zero point
M01;
    ⋮
```

NOTE Commands in ( ) can be specified only for the Y-axis specification SL-S series.

Ex. **Programming using “G65 P9021”**

To transfer a workpiece machined in spindle 1 from spindle 1 to spindle 2 and feed the workpiece by bar feeder

NOTE ① Move the turret to a position where the turret will not interfere with spindle 2 before executing “G65 P9021”.

② “Workpiece pushing check” is not executed by the program shown below.

```
O0001;
N1;
     ⋮
     ⋮          Machining program (machining of a workpiece in spindle 1)
     ⋮
N5;
(G30 P3 V0;) ..... Returning the Y-axis to the 3rd zero point
(G30 P3 U0;) ..... Returning the X-axis to the 3rd zero point
G65 P9021 A2. B–_ C–_ E2.0 D85.0 Y1000. Z1.0 X55.0 R22.0 U0.5 V18.0 W0.1;
 ..... Specifying the workpiece transfer command (with M70 output)
```

- A2. ..... Spindle synchronization mode (spindle normal rotation, normal rotation for cut-off)
- B–_ ..... Approach position for workpiece transfer (coordinate value in the machine coordinate system)
- C–_ ..... Workpiece transfer position (coordinate value in the machine coordinate system)
- E2.0 ..... Dwell time of 2 seconds for air blow executed at the approach position
- D85.0 .... Workpiece pulling-out distance for executing cutting-off operation; 85 mm
- Y1000. ... Spindle speed of 1000 min^{-1} for executing cutting-off operation Coolant discharge ON

NOTE Since address S is not specified, the spindle is controlled in the constant spindle speed mode during cutting off.

- Z1.0 ..... Z coordinate value of the position where cutting-off starts.
- X55.0 .... X coordinate value of the position where cutting-off starts.

- R22.0 . . . . X coordinate value of the point where cutting-off feedrate is lowered before the workpiece is cut off.
- U0.5 . . . . . Feedrate (0.5 mm/rev) to be applied for cutting-off operation up to the position where the feedrate is lowered.
- V18.0 . . . . X coordinate value of the cutting-off end position
- W0.1 . . . . . Feedrate (0.1 mm/rev) to be applied for axis feed up to the position where cutting-off operation is completed.

(G28 V0;) . . . . . Returning the Y-axis to the machine zero point

M01;

⋮

Commands in ( ) can be specified only for the Y-axis specification SL-S series.

APPENDIX 3 **G65 P9022** Workpiece Ejection Macro Program (MSD-501II)

The workpiece finished in spindle 2 is ejected out to the parts catcher and the work counter increases “1” when “G65 P9022” is specified.

NOTE

① “G65 P9022” can be specified only for the SL-S series equipped with the CAPII automatic conversational programming function. The CAPII automatic conversational programming function is available only for the MSD-501II and the MSD-518II, and also the MSG-501 for which CAPII is specified as the automatic conversational programming function.

② “G65 P9022” cannot be used for the machine which is not equipped with a parts catcher, a workpiece ejector, and a work counter.

③ Although “G65 P9022” can be used for ejecting out a finished workpiece from spindle 2, it cannot be used for ejecting out a workpiece from spindle 1.

COMMAND

G65 P9022 A_ B_ ;

- G65 P9022 . . . Workpiece ejection command
- A . . . . . The position where a workpiece is ejected out to a parts catcher (coordinate value in the machine coordinate system)
- B . . . . . Dwell time for through-spindle air blow after workpiece ejection and spindle air blow after parts catcher retraction

  NOTE If address B is omitted or “B0.” is specified, dwell is not executed for through-spindle air blow and spindle air blow.

NOTE For addresses used in the G65 P9022 macro program, all values must have a decimal point.

Ex. **Programming using “G65 P9022”**

O0001;
⋮
⋮ Machining program (machining of a workpiece in spindle 2)
⋮

M09; . . . . . Stopping coolant supply
M05; . . . . . Stopping spindle 2
(G30 P3 V0;) . . . . . Returning the Y-axis to the 3rd zero point
(G30 P3 U0;) . . . . . Returning the X-axis to the 3rd zero point
G65 P9022 A–_ B1.0; . . . . . Specifying the workpiece ejection command

- A–_ . . . . . The position where a workpiece is ejected out to a parts catcher (coordinate value in the machine coordinate system)
- B1.0 . . . . . Dwell time of 1 second for through-spindle air blow and spindle air blow

(G28 V0;) . . . . . Returning the Y-axis to the machine zero point
⋮

NOTE Commands in ( ) can be specified only for the Y-axis specification SL-S series.

CHAPTER C
M FUNCTIONS

This chapter describes the M functions.

The examples of program given in this chapter all assume tool nose R0.

CONTENTS

C : M FUNCTIONS

1. M Code List C–1
   - 1.1 SL, VL, TL Series C–1
   - 1.2 SL-S Series C–7
   - 1.3 LL-7, 8 ..... C–12
   - 1.4 CL Series C–15

2. M00, M01 Program Stop and Optional Stop C–18

3. M02, M30 Program End, Program End and Rewind C–21

4. M03, M203, M04, M204, M05 Spindle Start and Stop C–23

5. M13, M14, M05 Start and Stop of Rotary Tool Spindle Rotation C–26

6. M08, M09 Coolant Discharge ON/OFF C–28

7. M23, M24 Chamfering ON/OFF C–30

8. M10, M210, M11, M211 Chuck Clamp/Unclamp C–33

9. M25, M26 Tailstock Spindle IN/OUT C–37

10. M34, M35, M36 Synchronized Operation ON/OFF C–41

11. M45, M245, M46 C-axis Connection and Cancel C–46

12. M47 Workpiece Ejector OUT C–48

13. M48, M49 Feedrate Override Cancel OFF/ON C–50

14. M68, M268, M69 Spindle Brake Clamp and Unclamp C–52

15. M70, M483, M482 Bar Feeder Operation, Bar Feed OFF, Bar Stock Change C–54

16. M73, M74 Parts Catcher IN/OUT C–57

17. M432 Parts Catcher Cycle Function C–59

18. M80 Workpiece Cut-off Detection C–61

19. M85, M86 Automatic Door Open/Close C–63

20. M89 Work Counter, Total Counter C–65

21. M98, M99 Sub-program Call and Sub-program End C–68

22. M90, M290, M91, M291 Simultaneous Spindle/
Rotary Tool Spindle Operation Mode ON/OFF C–72

23. M320, M321 Y-axis Lock/Unlock C–74

24. M40 - M44 Selecting Spindle Speed Range C–76

25. M28, M29 In-position Check Valid and In-position Check Invalid C–78

26. M39 Rotary Tool Joint Check C–80

27. Summary C–81

APPENDIX 1 Multiple M Code Function . . . . . APPENDIX C–1

1. M Code List

M codes are also called the miscellaneous functions. They control program flow, coolant discharge on/off, etc. in addition to realize the functions supplementary to those called by the G codes.

NOTE

① The M codes described in this section are generic ones and all of them are not usable by all machine models or with some models those not specified below may be used. There are also cases that the function of the M code stated below has different function on specific models. For details, refer to the ladder diagram supplied with your machine or contact Mori Seiki.

② With the following models of NC, up to three M codes may be specified in a block. MSC-500, MSC-501, MSG-501, MSD-501, and MSD-501II

For details, refer to page APPENDIX C–1 (APPENDIX 1).

1.1 SL, VL, TL Series

NOTE

*1: Only for SL series and TL series

*2: Only for VL series

*3: Only for TL series

*4: Only for SL series. However, SL-65 and SL-75 series are excluded.

*5: Optional for MC type

*6: Only for SL series. However, SL-400, SL-600, SL-65, and SL-75 series are excluded.

*7: Only for SL-400, SL-600, SL-65, SL-75, and VL-55 series.

*8: Only for TL, SL-400, and SL-600 series.

*9: Only for SL series. However, SL-600, SL-65, and SL-75 series are excluded.

*10: Only for SL-600, SL-65, SL-75, and VL-55 series.

*11: Only for SL, VL, and TL series.

*12: Standard for the machine equipped with the loader and the SL-303B, SL-400B, SL-600, and VL-55 equipped with MC type.

*13: Only for SL series and TL series. However, SL-400 and SL-600 series are excluded.

*14: Only for TL series and SL-600 series.

*15: Only for SL series. However, SL-25E, SL-400 and SL-600 series, and NC unit of MSC-500 are excluded.

*16: Only for SL series and TL series. However, SL-65 and SL-75 series are excluded.

*17: Only for SL-65 and SL-75 series.

*18: Only for SL-600 and VL-55 series.

*19: Only for SL-400, SL-600 and VL-55 series.

*20: Only for SL series and TL series. However, SL-400, SL-600, SL-65 and SL-75 series are excluded.

Code	Function	Description
M00	Program stop	Suspends program execution temporarily.
M01	Optional stop	Suspends program execution temporarily. Whether the function is valid or not is selectable by a switch on the operation panel.
M02	Program end	Ends program execution and resets the NC.
M03	Spindle start (normal)	Starts the spindle in the normal direction. Normal direction: Clockwise rotation, viewing the workpiece from the rear of the spindle.
M04	Spindle start (reverse)	Starts the spindle in the reverse direction. Reverse direction: Counterclockwise rotation, viewing the workpiece from the rear of the spindle.
M05	Spindle (rotary tool spindle) stop	Stops the spindle or the rotary tool spindle rotation.
M08	Coolant ON	Starts coolant discharge.
M09	Coolant OFF	Stops coolant discharge.
M10	Chuck clamp	Opens and closes the chuck. These M codes are used when the machine is equipped with the bar feeder or loader, or for both-center work.
M11	Chuck unclamp	
M13	Rotary tool spindle start (normal)	Starts the rotary tool spindle in the normal direction. Normal direction: Clockwise rotation, viewing the workpiece from the rear of the rotary tool spindle. (Valid for MC type and Y-axis specification)
M14	Rotary tool spindle start (reverse)	Starts the rotary tool spindle in the reverse direction. Reverse direction: Counterclockwise rotation, viewing the workpiece from the rear of the rotary tool spindle. (Valid for MC type and Y-axis specification)
M17	Turret head rotation (normal)	Starts turret head rotation. Whether the M17 and M18 codes are valid or invalid is set using a parameter.
M18	Turret head rotation (reverse)	
M19	Spindle orientation	Sets the spindle in the predetermined angular position. (The spindle orientation device is optional.*12)
M23	Chamfering ON	Makes chamfering in thread cutting valid or invalid. (These functions are valid only in the thread cutting mode called by G92 and G76.)
M24	Chamfering OFF	
M25*1	Tailstock spindle OUT	These functions are valid for the machine equipped with the tailstock.
M26*1	Tailstock spindle IN	

Code	Function	Description
M27	Tool skip ON	This function is valid for the machine equipped with the tool life management A function.
M28	In-position check valid	
M29	In-position check invalid	
M30	Program end and rewind	Ends program execution, resets the NC and rewinds the program.
M31*17	Interlock bypass ON	
M32*17	Interlock bypass OFF	
M37*16	Ceiling shutter open	(The ceiling shutter is optional.)
M38*16	Ceiling shutter close	
M39*7	Rotary tool joint check	This function is valid for MC type.
M40*7	Spindle drive gear in neutral	These functions are valid only for the machine equipped with the transmission.
M41*7	Spindle drive gear in the 1st gear range	
M42*7	Spindle drive gear in the 2nd gear range	
M43*10	Spindle drive gear in the 3rd gear range	
M45	C-axis joint	These functions are valid for MC type and Y-axis specification.
M46	C-axis release	
M48	Override cancel OFF	Override cancel invalid
M49	Override cancel ON	Override cancel valid
M50	Sensor air blow ON for automatic in-machine tool presetter	(The corresponding air blow device is optional.)
M51	Spindle air blow ON	
M53	Contact sensor air blow ON	
M55	Sensor air blow OFF for automatic in-machine tool presetter	
M58	Contact sensor air blow OFF	
M59	Spindle air blow OFF	
M60*1	Indexing chuck 45° index	These functions are valid for the machine equipped with indexing chuck. (The corresponding signal is output to an external device.)
M61*1	Indexing chuck 90° index	
M62*1	Indexing chuck 180° index	
M64*6	Robot service call	This function is valid for the machine equipped with the robot.
M68	Spindle brake clamp	Clamps and unclamps the spindle brake. These functions are valid for MC type and Y-axis specification.
M69	Spindle brake unclamp	
M70*6	Bar feeder operation	Feeds the bar stock into the machine. The function is valid for the machine equipped with the bar feeder. (The corresponding signal is output to an external device.)

Code	Function	Description
M71*[11]	Automatic in-machine tool presetter arm DOWN	Moves the tool presetter arm up/down. These functions are valid for the machine equipped with the automatic in-machine tool presetter.
M72*[11]	Automatic in-machine tool presetter arm UP	
M73*[6]	Parts catcher OUT	Moves the parts catcher out/in. These functions are valid for the machine equipped with the parts catcher.
M74*[6]	Parts catcher IN	
M75	X-axis mirror image OFF	
M76	X-axis mirror image ON	
M78*[1]	Tailstock body clamp	Clamps/unclamps the tailstock body. These functions are valid for the machine equipped with the programmable tailstock.
M79*[1]	Tailstock body unclamp	
M83	Chucking pressure 1	Selects chucking pressure level. These functions are valid for the machine equipped with the chuck high/low pressure system.
M84	Chucking pressure 2	
M85	Automatic door open	Opens/closes the automatic door; valid only for machine equipped with an automatic door.
M86	Automatic door close	
M87*[11]	Sensor switching ON	Switches the sensors to be used. These functions are valid for the machine equipped with the sensors.
M88*[11]	Sensor switching OFF	
M89	Work counter/total counter	(The counter function is optional.)
M90	Spindle/rotary tool spindle simultaneous operation mode ON	Makes the simultaneous operation mode using the main spindle and the rotary tool spindle valid or invalid. These functions are valid for MC type and Y-axis specification.
M91	Spindle/rotary tool spindle simultaneous operation mode OFF	
M92	Load monitoring (teaching, monitoring) valid	Load monitoring specification
M93	Load monitoring (teaching, monitoring) invalid	
M98	Sub-program call	
M99	Sub-program end Repetition of program	Returns the program flow from the current sub-program to the main program.
M300	Tool life count	This function is valid for the machine equipped with the tool life management B function.
M306	Synchronized tapping mode ON (in milling mode)*[20] Polygon mode ON (in turning mode)*[6]	These functions are valid for MC type.*[3] These functions are valid for MC type and Y-axis specification.*[6]
M307	Synchronized tapping mode OFF (in milling mode)*[20] Polygon mode OFF (in turning mode)*[6]	
M319	Rotary tool spindle orientation*[3] Rotary tool spindle zero return*[4]	This function is valid for Y-axis specification.*[3] This function is valid for MC type and Y-axis specification.*[4]

Code	Function	Description
M320*3	Y-axis lock	These functions are valid for Y-axis specification.
M321*3	Y-axis unlock	
M329*3	Synchronized tapping mode ON*5	This function is valid for MC type. (spindle) This function is valid for Y-axis specification. (spindle or rotary tool spindle)
M329*19	Synchronized tapping mode ON	This function is valid for MC type.
M329*9	Spindle synchronized tapping mode ON	
M340*16	Steady rest 1 open	These functions are valid for the machine equipped with the steady rest.
M341*16	Steady rest 1 close	
M342*8	Steady rest 2 open	
M343*8	Steady rest 2 close	
M344*8	Steady rest 3 open	
M345*8	Steady rest 3 close	
M346*8	Steady rest 4 open	
M347*8	Steady rest 4 close	
M348*14	Steady rest 5 open	
M349*14	Steady rest 5 close	
M351*18	Steady rest 6 open	
M352*18	Steady rest 6 close	
M382*6	Shower coolant ON	These functions are valid for the machine equipped with the shower coolant system.
M383*6	Shower coolant OFF	
M384*16	Spindle orientation and ceiling shutter open	(The spindle orientation and ceiling shutter open functions are optional.)
M395*15	Z-axis mirror image OFF	
M396*15	Z-axis mirror image ON	
M434*13	Tailstock spindle pressure 1 (high pressure)	These functions are valid for the machine equipped with the high/low tailstock spindle pressure level selectable system.
M435*13	Tailstock spindle pressure 2 (low pressure)	
M438	Switching-over of animation display modes between basic C-axis animation mode and cylindrical coordinate system animation mode *3 C-axis graphic mode*4	These functions are valid for MC type and Y-axis specification. (MSD-518II)
M439	Switching-over of animation display modes between basic C-axis animation mode and Y-axis animation mode*3	
M440*11	External output	
M441*11	External output	
M442*11	External output	

Code	Function	Description
M443*[11]	External output	
M444*[11]	External output	
M445*[11]	External output	
M446*[11]	External output	
M447*[11]	External output	
M448*[11]	External output	
M449*[11]	External output	
M456*[16]	Tailstock spindle air blow ON	(The tailstock spindle air blow device is optional.)
M457*[16]	Tailstock spindle air blow OFF	
M458*[4]	Tool tip air blow ON	(The tool tip air blow device is optional)
M459*[4]	Tool tip air blow OFF	
M476*[6]	Spindle high-speed motor winding selection command	
M477*[6]	Spindle motor winding fix cancel command	
M478*[6]	Through-spindle coolant ON	Through-spindle coolant specification
M479*[6]	Through-spindle coolant OFF	
M482*[6]	Change bar stock	These functions are valid for the machine equipped with the bar feeder.
M483*[6]	Bar stock feed OFF	

1.2 SL-S Series

NOTE *1: Standard for the machine equipped with the loader.

Code	Function	Description
M00	Program stop	Suspends program execution temporarily.
M01	Optional stop	Suspends program execution temporarily. Whether the function is valid or not is selectable by a switch on the operation panel.
M02	Program end	Ends program execution and resets the NC.
M03	Spindle 1 start (normal)	Starts spindle 1 in the normal direction. Normal direction: Clockwise rotation, viewing the workpiece from the rear of spindle 1.
M04	Spindle 1 start (reverse)	Starts spindle 1 in the reverse direction. Reverse direction: Counterclockwise rotation, viewing the workpiece from the rear of spindle 1.
M05	Spindle 1/spindle 2/rotary tool spindle stop	Stops spindle 1 or spindle 2 rotation. Stops the rotary tool spindle rotation.
M08	Coolant ON	Starts coolant discharge.
M09	Coolant OFF	Stops coolant discharge.
M10	Chuck clamp <spindle 1>	Opens and closes the chuck. These M codes are used when the machine is equipped with the bar feeder or loader, or for both-center work.
M11	Chuck unclamp <spindle 1>	
M13	Rotary tool spindle start (normal)	Starts the rotary tool spindle in the normal direction. Normal direction: Clockwise rotation, viewing the workpiece from the rear of the rotary tool spindle. (Valid for MC type and Y-axis specification)
M14	Rotary tool spindle start (reverse)	Starts the rotary tool spindle in the reverse direction. Reverse direction: Counterclockwise rotation, viewing the workpiece from the rear of the rotary tool spindle. (Valid for MC type and Y-axis specification)
M17	Turret head rotation (normal)	Starts turret head rotation. Whether the M17 and M18 codes are valid or invalid is set using a parameter.
M18	Turret head rotation (reverse)	
M19	Spindle orientation <spindle 1>	Sets spindle 1 in the predetermined angular position. (The spindle orientation device is optional.*1)

Code	Function	Description
M23	Chamfering ON	Makes chamfering in thread cutting valid or invalid. (These functions are valid only in the thread cutting mode called by G92 and G76.)
M24	Chamfering OFF	
M27	Tool skip ON	This function is valid for the machine equipped with the tool life management A function.
M28	In-position check valid	
M29	In-position check invalid	
M30	Program end and rewind	Ends program execution, resets the NC and rewinds the program.
M34	Phase synchronous operation ON	
M35	Speed synchronous operation ON	
M36	Synchronization OFF	
M37	Ceiling shutter open	(The ceiling shutter is optional.)
M38	Ceiling shutter close	
M45	C-axis joint <spindle 1>	These functions are valid for MC type and Y-axis specification.
M46	C-axis release <spindle 1, spindle 2>	
M47	Workpiece ejector OUT	(This function is optional for the machine equipped with the loader.)
M48	Override cancel OFF	Override cancel invalid
M49	Override cancel ON	Override cancel valid
M50	Sensor air blow ON for automatic in-machine tool presetter <spindle 1>	(The corresponding air blow device is optional.)
M51	Spindle air blow ON <spindle 1>	
M53	Contact sensor air blow ON <spindle 1>	
M55	Sensor air blow OFF for automatic in-machine tool presetter <spindle 1>	
M58	Contact sensor air blow OFF <spindle 1>	
M59	Spindle air blow OFF <spindle 1>	(The corresponding air blow device is optional.)
M60	Indexing chuck 45° index	These functions are valid for the machine equipped with indexing chuck. (The corresponding signal is output to an external device.)
M61	Indexing chuck 90° index	
M62	Indexing chuck 180° index	
M64	Robot service call	The function is valid for the machine equipped with the robot.
M68	Spindle brake clamp <spindle 1>	Clamps and unclamps the spindle brake. These functions are valid for MC type and Y-axis specification.
M69	Spindle brake unclamp <spindle 1, spindle 2>	

Code	Function	Description
M70	Bar feeder operation	Feeds the bar stock into the machine. The function is valid for the machine equipped with the bar feeder. (The corresponding signal is output to an external device.)
M71	Automatic in-machine tool presetter arm DOWN	Moves the tool presetter arm up/down. These functions are valid for the machine equipped with the automatic in-machine tool presetter.
M72	Automatic in-machine tool presetter arm UP	
M73	Parts catcher OUT	(These functions are optional for the machine equipped with the loader.)
M74	Parts catcher IN	
M75	X-axis mirror image OFF	
M76	X-axis mirror image ON	
M80	Cut-off detection	
M81	Workpiece pushing check ON	
M82	Workpiece pushing check OFF	
M83	Chucking pressure 1 <spindle 1>	Selects chucking pressure level. These functions are valid for the machine equipped with the chuck high/low pressure system.
M84	Chucking pressure 2 <spindle 1>	
M85	Automatic door open	Opens/closes the automatic door; valid only for machine equipped with an automatic door.
M86	Automatic door close	
M87	Sensor switching ON <spindle 1>	Switches the sensors to be used. These functions are valid for the machine equipped with the sensors.
M88	Sensor switching OFF <spindle 1>	
M89	Work counter/total counter	(The counter function is optional.)
M90	Spindle 1/rotary tool spindle simultaneous operation mode ON	Makes the simultaneous operation mode using the main spindle and the rotary tool spindle valid or invalid. These functions are valid for MC type and Y-axis specification.
M91	Spindle 1/rotary tool spindle simultaneous operation mode OFF	
M92	Load monitoring (teaching, monitoring) valid	Load monitoring specification
M93	Load monitoring (teaching, monitoring) invalid	
M98	Sub-program call	
M99	Sub-program end Repetition of program	Returns the program flow from the current sub-program to the main program.
M203	Spindle 2 start (normal)	Starts spindle 2 in the normal direction. Normal direction: Clockwise rotation, viewing the workpiece from the rear of spindle 2.
M204	Spindle 2 start (reverse)	Starts spindle 2 in the reverse direction. Reverse direction: Counterclockwise rotation, viewing the workpiece from the rear of spindle 2.

Code	Function	Description
M210	Chuck clamp <spindle 2>	Opens and closes the chuck. These M codes are used when the machine is equipped with the bar feeder or loader, or for both-center work.
M211	Chuck unclamp <spindle 2>	
M219	Spindle orientation <spindle 2>	Sets spindle 2 in the predetermined angular position. (The spindle orientation device is optional.*1)
M245	C-axis joint <spindle 2>	The function is valid for MC type and Y-axis specification.
M250	Sensor air blow ON for automatic in-machine tool presetter <spindle 2>	(The corresponding air blow device is optional.)
M251	Spindle air blow ON <spindle 2>	
M252	In-spindle air blow ON <spindle 2>	
M253	Contact sensor air blow ON <spindle 2>	
M255	Sensor air blow OFF for automatic in-machine tool presetter <spindle 2>	
M257	In-spindle air blow OFF <spindle 2>	
M258	Contact sensor air blow OFF <spindle 2>	
M259	Spindle air blow OFF <spindle 2>	
M268	Spindle brake clamp <spindle 2>	Clamps and unclamps the spindle brake. This function is valid for MC type and Y-axis specification.
M283	Chucking pressure 1 <spindle 2>	Selects chucking pressure level. These functions are valid for the machine equipped with the chuck high/low pressure system.
M284	Chucking pressure 2 <spindle 2>	
M287	Sensor switching ON <spindle 2>	Switches the sensors to be used. These functions are valid for the machine equipped with the sensors.
M288	Sensor switching OFF <spindle 2>	
M290	Spindle 2/rotary tool spindle simultaneous operation mode ON	Makes the simultaneous operation mode using the main spindle and the rotary tool spindle valid or invalid. These functions are valid for MC type and Y-axis specification.
M291	Spindle 2/rotary tool spindle simultaneous operation mode OFF	
M300	Tool life count	This function is valid for the machine equipped with the tool life management B function.
M303	Spindle 1 selection signal ON	
M304	Spindle 2 selection signal ON	

Code	Function	Description
M306	Synchronized tapping mode ON (in milling mode) Polygon mode ON (in turning mode)	These functions are valid for MC type and Y-axis specification.
M307	Synchronized tapping mode OFF (in milling mode) Polygon mode OFF (in turning mode)	
M319	Rotary tool spindle zero return	
M329	Spindle synchronized tapping mode ON <spindle 1>	
M340	Steady rest 1 open	These functions are valid for the machine equipped with the steady rest.
M341	Steady rest 1 close	
M382	Shower coolant ON	These functions are valid for the machine equipped with the shower coolant system.
M383	Shower coolant OFF	
M384	Spindle 1 orientation and ceiling shutter open	(Spindle 1/spindle 2 orientation and ceiling shutter open functions are optional.)
M387	Spindle 2 orientation and ceiling shutter open	
M395	Z-axis mirror image OFF	
M396	Z-axis mirror image ON	
M432	Parts catcher cycle	The function is valid for S type.
M438	C-axis graphic mode	This function is valid for MC type and Y-axis specification. (MSD-518II)
M440	External output	
M441	External output	
M442	External output	
M443	External output	
M444	External output	
M445	External output	
M446	External output	
M447	External output	
M448	External output	
M449	External output	
M458	Tool tip air blow ON	(The tool tip air blow device is optional.)
M459	Tool tip air blow OFF	
M476	Spindle high-speed motor winding selection command	
M477	Spindle motor winding fix cancel command	
M478	Through-spindle coolant ON <spindle 1>	Through-spindle coolant specification
M479	Through-spindle coolant OFF <spindle 1>	

Code	Function	Description
M482	Change bar stock	These functions are valid for the machine equipped with the bar feeder.
M483	Bar stock feed OFF	

1.3 LL-7, 8

Code	Function	Description
M00	Program stop	Suspends program execution temporarily.
M01	Optional stop	Suspends program execution temporarily. Whether the function is valid or not is selectable by a switch on the operation panel.
M02	Program end	Ends program execution and resets the NC.
M03	Spindle start (normal)	Starts the spindle in the normal direction. Normal direction: Clockwise rotation, viewing the workpiece from the rear of the spindle.
M04	Spindle start (reverse)	Starts the spindle in the reverse direction. Reverse direction: Counterclockwise rotation, viewing the workpiece from the rear of the spindle.
M05	Spindle stop	Stops the spindle rotation.
M08	Coolant ON	Starts coolant discharge.
M09	Coolant OFF	Stops coolant discharge.
M10	Chuck clamp	Opens and closes the chuck. These M codes are used when the machine is equipped with the both-center work.
M11	Chuck unclamp	
M17	Turret head rotation (normal)	Starts turret head rotation. Whether the M17 and M18 codes are valid or invalid is set using a parameter.
M18	Turret head rotation (reverse)	
M19	Spindle orientation	Sets the spindle in the predetermined angular position. (The spindle orientation device is optional.)
M23	Chamfering ON	Makes chamfering in thread cutting valid or invalid. (These functions are valid only in the thread cutting mode called by G92 and G76.)
M24	Chamfering OFF	
M25	Tailstock spindle OUT	
M26	Tailstock spindle IN	
M27	Tool skip ON	This function is valid for the machine equipped with the tool life management A function.
M28	In-position check valid	
M29	In-position check invalid	
M30	Program end and rewind	Ends program execution, resets the NC and rewinds the program.
M37	Ceiling shutter open	(The ceiling shutter is optional.)
M38	Ceiling shutter close	

Code	Function	Description
M40	Spindle drive gear in neutral	These functions are valid only for the machine equipped with the transmission.
M41	Spindle drive gear in the 1st gear range	
M42	Spindle drive gear in the 2nd gear range	
M43	Spindle drive gear in the 3rd gear range	
M44	Spindle drive gear in the 4th gear range	
M48	Override cancel OFF	Override cancel invalid
M49	Override cancel ON	Override cancel valid
M50	Sensor air blow ON for automatic in-machine tool presetter	(The corresponding air blow device is optional.)
M51	Spindle air blow ON	
M53	Contact sensor air blow ON	
M55	Sensor air blow OFF for automatic in-machine tool presetter	
M58	Contact sensor air blow OFF	
M59	Spindle air blow OFF	
M71	Automatic in-machine tool presetter arm DOWN	Moves the tool presetter arm up/down. These functions are valid for the machine equipped with the automatic in-machine tool presetter.
M72	Automatic in-machine tool presetter arm UP	
M75	X-axis mirror image OFF	
M76	X-axis mirror image ON	
M83	Chucking pressure 1	Selects chucking pressure level. These functions are valid for the machine equipped with the chuck high/low pressure system.
M84	Chucking pressure 2	
M85	Automatic door open	Opens/closes the automatic door; valid only for machine equipped with an automatic door.
M86	Automatic door close	
M87	Sensor switching ON	Switches the sensors to be used. These functions are valid for the machine equipped with the sensors.
M88	Sensor switching OFF	
M89	Work counter/total counter	(The counter function is optional.)
M92	Load monitoring (teaching, monitoring) valid	Load monitoring specification
M93	Load monitoring (teaching, monitoring) invalid	
M98	Sub-program call	
M99	Sub-program end Repetition of program	Returns the program flow from the current sub-program to the main program.
M300	Tool life count	This function is valid for the machine equipped with the tool life management B function.
M384	Spindle orientation and ceiling shutter open	(The spindle orientation and ceiling shutter open functions are optional.)

Code	Function	Description
M440	External output	
M441	External output	
M442	External output	
M443	External output	
M444	External output	
M445	External output	
M446	External output	
M447	External output	
M448	External output	
M449	External output	
M458	Tool tip air blow ON	(The tool tip air blow device is optional)
M459	Tool tip air blow OFF	

1.4 CL Series

Code	Function	Description
M00	Program stop	Suspends program execution temporarily.
M01	Optional stop	Suspends program execution temporarily. Whether the function is valid or not is selectable by a switch on the operation panel.
M02	Program end	Ends program execution and resets the NC.
M03	Spindle start (normal)	Starts the spindle in the normal direction. Normal direction: Clockwise rotation, viewing the workpiece from the rear of the spindle.
M04	Spindle start (reverse)	Starts the spindle in the reverse direction. Reverse direction: Counterclockwise rotation, viewing the workpiece from the rear of the spindle.
M05	Spindle stop	Stops spindle rotation.
M08	Coolant ON	Starts coolant discharge.
M09	Coolant OFF	Stops coolant discharge.
M10	Chuck clamp	Opens and closes the chuck. These M codes are used when the machine is equipped with the bar feeder or loader, or for both-center work (tailstock specification).
M11	Chuck unclamp	
M17	Turret head rotation (normal)	Starts turret head rotation. Whether the M17 and M18 codes are valid or invalid is set using a parameter.
M18	Turret head rotation (reverse)	
M19	Spindle orientation 1	Sets the spindle in the predetermined angular position.
M20	Spindle orientation 2	Sets the spindle in the predetermined angular position.
M23	Chamfering ON	Makes chamfering in thread cutting valid or invalid. (These function is valid only in the thread cutting mode called by G92 and G76.)
M24	Chamfering OFF	
M25	Tailstock spindle OUT	These functions are valid for the machine equipped with the tailstock.
M26	Tailstock spindle IN	
M27	Tool skip ON	This function is valid for the machine equipped with the tool life management function.
M28	In-position check valid	
M29	In-position check invalid	
M30	Program end and rewind	Ends program execution, resets the NC and rewinds the program.
M37	Ceiling shutter open	(The ceiling shutter is optional.)
M38	Ceiling shutter close	
M48	Override cancel OFF	Override cancel invalid
M49	Override cancel ON	Override cancel valid

Code	Function	Description
M50	Sensor air blow ON for automatic in-machine tool presetter	(The corresponding air blow device is optional.)
M51	Spindle air blow ON	
M52	In-spindle air blow ON	
M53	Contact sensor air blow ON	
M55	Sensor air blow OFF for automatic in-machine tool presetter	
M57	In-spindle air blow OFF	
M58	Contact sensor air blow OFF	
M59	Spindle air blow OFF	
M60	Indexing chuck 45° index	These functions are valid for the machine equipped with indexing chuck. (The corresponding signal is output to an external device.)
M61	Indexing chuck 90° index	
M62	Indexing chuck 180° index	
M64	Robot service call	This function is valid for the machine equipped with the robot.
M70	Bar feeder operation	Feeds the bar stock into the machine. The function is valid for the machine equipped with the bar feeder.
M71	Automatic in-machine tool presetter arm DOWN	Moves the tool presetter arm up/down. These functions are valid for the machine equipped with the automatic in-machine tool presetter.
M72	Automatic in-machine tool presetter arm UP	
M73	Parts catcher OUT	Moves the parts catcher out/in. These functions are valid for the machine equipped with the parts catcher.
M74	Parts catcher IN	
M75	X-axis mirror image OFF	
M76	X-axis mirror image ON	
M78	Tailstock body/steady rest clamp	Clamps/unclamps the tailstock body/steady rest. These functions are valid for the machine equipped with the programmable tailstock or programmable steady rest.
M79	Tailstock body/steady rest unclamp	
M83	Chucking pressure 1	Selects chucking pressure level. These functions are valid for the machine equipped with the chuck high/low pressure system.
M84	Chucking pressure 2	
M85	Automatic door open	Opens/closes the automatic door; valid only for machine equipped with an automatic door.
M86	Automatic door close	
M87	Sensor switching ON	Switches the sensors to be used. These functions are valid for the machine equipped with the sensors.
M88	Sensor switching OFF	
M89	Work counter/total counter	
M92	Load monitoring (teaching, monitoring) valid	These functions are valid for the load monitoring specification.
M93	Load monitoring (teaching, monitoring) invalid	

Code	Function	Description
M98	Sub-program call	
M99	Sub-program end Repetition of program	Returns the program flow from the current sub-program to the immediately previous program.
M200	Chip conveyor start (forward direction)	These functions are valid for the machine equipped with the chip conveyor.
M201	Chip conveyor stop	
M220	Automatic door open	Opens/closes the automatic door; valid only for machine equipped with an automatic door.
M221	Automatic door close	
M222	Work counter increment	
M329	Spindle synchronized tapping mode ON	(The synchronized tapping function is optional.)
M340	Steady rest 1 open	These functions are valid for the machine equipped with the steady rest.
M341	Steady rest 1 close	
M382	Shower coolant ON	
M383	Shower coolant OFF	
M384	Spindle orientation and ceiling shutter open	(The spindle orientation and ceiling shutter open functions are optional.)
M434	Tailstock spindle pressure 1	These functions are valid for the machine equipped with the tailstock.
M435	Tailstock spindle pressure 2	
M440	External output	
M441	External output	
M442	External output	
M443	External output	
M444	External output	
M445	External output	
M446	External output	
M447	External output	
M448	External output	
M449	External output	
M456	Tailstock spindle air blow ON	These functions are valid for the machine equipped with the tailstock. (The tailstock spindle air blow device is optional.)
M457	Tailstock spindle air blow OFF	
M458	Tool tip air blow ON	(The tool tip air blow device is optional)
M459	Tool tip air blow OFF	
M476	Spindle high speed command (wound rotor selection)	
M477	Spindle low speed command (wound rotor selection)	
M478	In-spindle coolant ON	(The coolant device is optional.)
M479	In-spindle coolant OFF	
M482	Change bar stock	These functions are valid for the machine equipped with the bar feeder.
M483	Bar stock feed OFF	

2. **M00, M01** Program Stop and Optional Stop

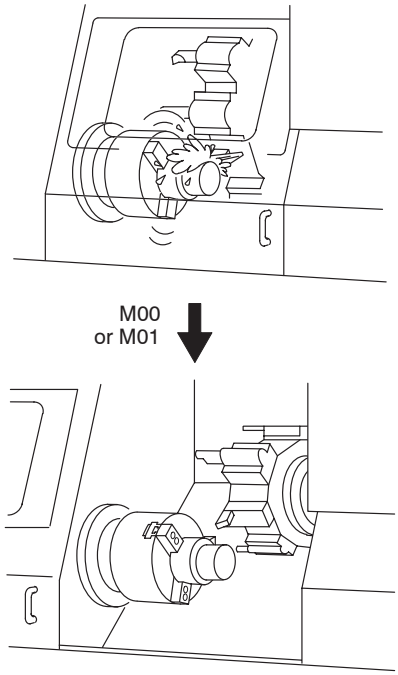

When the M00 command is executed during program execution, the machine stops unconditionally.

The spindle or rotary tool spindle, axis movement, and coolant discharge stop.

Enter the M00 command in a program at a block where the operation must be suspended.

Differing from the M00 command, the M01 command is valid only when the optional stop switch on the operation panel is pressed. In the condition that this switch is pressed, the M01 command has the same effect as the M00 command. That is, when the M01 command is executed while the optional stop function is valid, spindle or rotary tool spindle rotation, axis movement, and coolant discharge stop.

Enter the M01 command in a program at a block where the operation should be suspended occasionally as required. For example, use the M01 command when executing the program to machine the first workpiece or for executing test cutting.

<Using the M00 or M01 command>

- To check the dimensions of the machined workpiece
- To check the tool nose
- To remove chips during machining
- To remove or mount a workpiece

COMMAND

M00; . . . . . Calls the program stop function.

M01; . . . . . Calls the optional stop function.

CAUTION

① The S code and F code remain in the memory after the execution of the M00 or M01 command. However, to ensure correct operation, it is recommended that these codes be written in the block that follows the block which contains the M00 or M01 command.

② After the operation is suspended temporarily by the M00 or M01 command, do not rotate the turret head or move an axis manually. If either or both of such manual operations had to be carried out, return the turret head and the axes having been operated to the previous state before manual operation. After that the automatic operation may be restarted. If the automatic operation is restarted without restoring the previous state, interference will occur between the cutting tools or the tool holders and the chuck, workpiece, fixture, or the tailstock (if featured), causing damage to the machine or the workpiece will be machined by a wrong cutting tool, causing cutting tool to be broken.

NOTE

① Specify the M00 or M01 command in a block without other commands.

② The STATUS indicator **[M00/M01]** is lit when the M00 or M01 command is executed.

The program is continuously executed when the ST (ST) switch on the operation panel is pressed.

③ When the M00 or M01 command is executed, the spindle or spindle 1 start M commands (M03, M04), the rotary tool spindle start M commands (M13, M14), the spindle 2 start M commands (M203, M204), and the coolant discharge M command (M08) are canceled. Therefore, when specifying the M00 or M01 command in a program, determine the positions where these M commands are entered taking this into consideration.

When restarting the program after suspending program execution by the M00 or M01 command, specify the spindle or spindle 1 start M commands (M03, M04), the rotary tool spindle start M commands (M13, M14), or the spindle 2 start M commands (M203, M204) at the restart block. If coolant discharge is required, specify the M08 command as well.

How the M01 command is executed is explained below in relation with the status of the optional stop switch on the operation panel.

– Optional stop switch makes valid:

The M01 command is executed and the program stops after the execution of the block where the M01 command is contained.

– Optional stop switch makes invalid:

The M01 command is ignored and the program is executed continuously.

Ex. **Programming using M00 or M01**

O0001;
N1;
G50 S1500; . . . . . Setting the clamp spindle speed for automatic operation at 1500 min^{-1}
G00 T0101; . . . . . Rotating the turret to index No. 1 tool
G96 S120 M03; . . . . . Starting the spindle or spindle 1 in the normal direction; surface speed is 120 m/min.
⋮
⋮ Machining program
⋮
G00 Z20.0;
X200.0 Z150.0;
M01; or **M00;** . . . . . <M01> Optional stop

– If the indicator in the optional stop switch on the operation panel is lit:
The machine stops temporarily.
– If the indicator in the optional stop switch on the operation panel is not lit:
The M01 command is ignored and the program is executed continuously.

<M00> Program stop

– Program execution is suspended and the machine stops temporarily. After removing chips and/or checking the machined dimensions, press the (ST) switch, and the program execution restarts from the next block.

N2;
G50 S1500;
G00 T0202;
G96 S120 M03;
⋮
⋮ Machining program
⋮

3. **M02**, **M30** Program End, Program End and Rewind

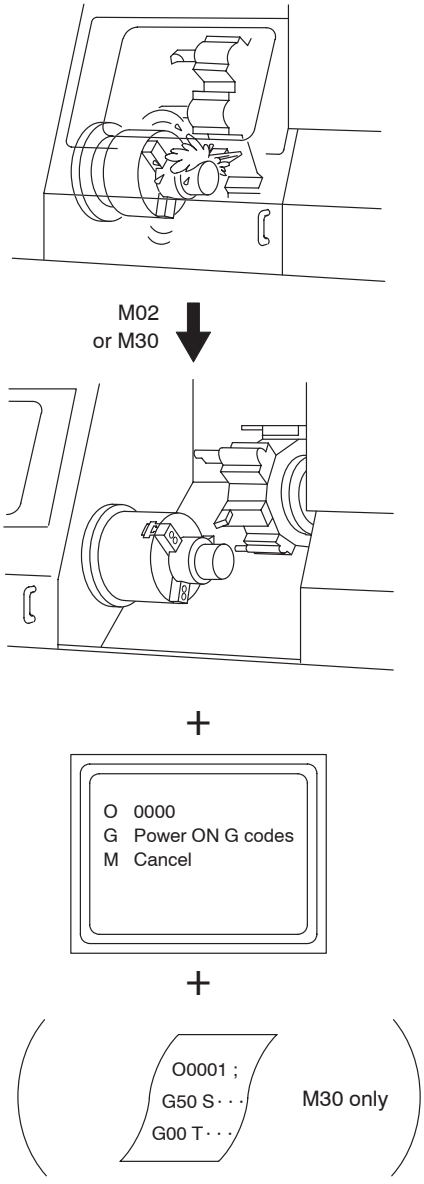

When the M02 or M30 command is executed,

1) All machine operations stop.
   - The spindle or rotary tool spindle stops.
   - Axis movement stops.
   - Coolant discharge stops.
2) The NC is reset.
   - In the reset state, the G codes that are valid when power is turned on are valid. However, G54 to G59, G20, or G21 mode remains unchanged.
   - The F code is canceled and not saved to memory.
   - The S code is not canceled and saved to memory.

   The S code and F codes remain valid.
3) In the case of the M30 command, the cursor returns to the start of the program.

   This is called the program rewind function.

The M30 command includes the program rewind function in addition to the functions supported by the M02 command. Since this feature is convenient when machining the same kind of workpieces continuously, the M30 command is usually used at the end of a program. By using the M30 command, the same program is executed repeatedly by simply pressing the [ST] (ST) switch.

NOTE For the machine equipped with the door interlock function, an alarm message (EX1024) is displayed on the screen unless the door is opened/closed if the [ST] (ST) switch is pressed after the completion of the program.

COMMAND

M02; ..... Specifies the end of program.

The program execution ends and the NC is reset.

M30; ..... Specifies the end of program and program rewind.

The program execution ends, the NC is reset, and the program is rewound.

NOTE
① Specify the M02 or M30 command in a block without other commands.

② The indicator above the [ST] (ST) switch goes off when the M02 or M30 command is executed. At the same time, the STATUS indicator **[M02/M30]** is lit.

Ex. **Programming using M02 or M30**

```
O0001;
N1;
G50 S1500; ..... Setting the spindle speed limit for automatic
                 operation at 1500 min–1
G00 T0101; ..... Rotating the turret to index No. 1 tool
G96 S120 M03; ..... Starting the spindle or spindle 1 in the normal
                    direction; surface speed is 120 m/min.
    ⋮
    ⋮          Machining program
    ⋮
G00 X200.0 Z150.0;
M01; ..... Optional stop
                 If the indicator in the optional stop switch [OSP] on
                 the operation panel is not lit:
                 The M01 command is ignored and the next block
                 is executed continuously.
N2;
G50 S1500;
G00 T0202; ..... Rotating the turret to index No. 2 tool
G96 S120 M03;
    ⋮
    ⋮          Machining program
    ⋮
G00 X200.0 Z150.0 M09;
M05;
M30; or M02; ..... <M02>  Ends program execution and automatic
                          operation stops.
                          Although the NC is reset, the cursor
                          stays at this position.
                  <M30>   Ends program execution and automatic
                          operation stops.
                          The NC is reset and the cursor returns to
                          the start of the program (O0001).
```

4. **M03, M203, M04, M204, M05** Spindle Start and Stop

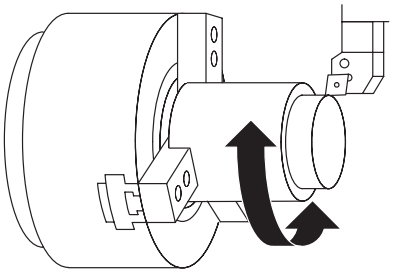

The M03 and M04 commands are used to start the spindle or spindle 1.

The M203 and M204 commands are used to start spindle 2.

The M05 command is used to stop the spindle, spindle 1 or spindle 2.

NOTE The M203 and M204 commands are used only for the SL-S series.

With the MC type machine or the Y-axis specification machine, the M05 command is used to stop the rotary tool spindle.

COMMAND

M03; . . . . . Specifies spindle or spindle 1 start in the normal direction.

Normal direction:
Clockwise rotation, viewing the workpiece from the rear of the spindle or spindle 1

M203; . . . . Specifies spindle 2 start in the normal direction.

Normal direction:
Clockwise rotation, viewing the workpiece from the rear of spindle 2

M04; . . . . . Specifies spindle or spindle 1 start in the reverse direction.

Reverse direction:
Counterclockwise rotation, viewing the workpiece from the rear of spindle or spindle 1

M204; . . . . Specifies spindle 2 start in the reverse direction.

Reverse direction:
Counterclockwise rotation, viewing the workpiece from the rear of spindle 2

M05; . . . . . Specifies spindle, spindle 1 and spindle 2 stop.

Stops the rotation of the spindle, spindle 1, or spindle 2.

CAUTION

① Do not stop the spindle by specifying the M05 command while the cutting tool is in contact with the workpiece. If the spindle is stopped while the cutting tool is in contact with the workpiece, the cutting tool will be chipped or the machine damaged.

② Start the spindle by executing either the M03 or M04 command or the M203 or M204 command before the cutting tool comes into contact with the workpiece. If the cutting tool is brought into contact with the workpiece while it stays stationary, the cutting tool will be chipped.

NOTE

① Before changing the spindle rotating direction from normal to reverse or from reverse to normal, stop the spindle once by specifying the M05 command. After that specify the M code which calls the spindle to rotate in the opposite direction.

If the spindle rotating direction is changed without specifying the M05 command, an alarm message (EX0401) is displayed on the screen and the spindle stops.

② The spindle cannot start if the chuck is unclamped.

Before specifying the M03, M203, M04, or M204 command, make sure that the STATUS indicator **[CHCL]** is lit or the STATUS indicator **[CHCL]** and the status indicator **[HEADSTOCK 2 CHUCK CLAMP]** are lit.

③ Before specifying the M03, M203, M04, or M204 command, it is necessary to specify the required spindle speed using an S code.

For details of S code, refer to page D–13 (2.).

For large-sized models such as SL-400 and 600, it is recommended to cut a workpiece by rotating the spindle in the reverse direction taking into consideration the rigidity of the machine.

Ex. **Programming using M03, M04, and M05**

```
O0001;
N1;
G50 S1500;
G00 T0101;
G96 S120 M03; ..... Starting the spindle or spindle 1 in the normal
                    direction at 1500 min–1.
                    Cutting speed:  120 m/min
    ⋮
    ⋮          Machining program
    ⋮
G00 X200.0 Z150.0 M09;
M01; ..... Optional stop
           If the indicator in the optional stop switch [OSP] on
           the operation panel is not lit:
           The M01 command is ignored and the program is
           executed continuously.
           If the M01 command is executed, the spindle or
           spindle 1 stops rotating.  However, if the M01
           command is ignored, the spindle or spindle 1
           keeps rotating.
```

```
N2;
G50 S1500;
G00 T0202;
G96 S120 M03; ..... Starting the spindle or spindle 1 in the normal
                    direction at 1500 min–1.
                    Cutting speed: 120 m/min
                    Since there are cases that the spindle or spindle 1
                    is stopped by the execution of the M00 or M01
                    command, the M03 (M04) command must be
                    specified in the "G96 S_" block at the beginning of
                    each part program.
    ⋮
    ⋮          Machining program
    ⋮
G00 X200.0 Z150.0 M05; ..... Stopping the spindle or spindle 1 rotation
```

NOTE If the following part program includes the machining which requires the spindle rotation to the reverse direction, the spindle rotation must be stopped by specifying the M05 command.

```
M01; ..... Optional stop
N3;
G50 S1500;
G00 T0303;
G97 S640 M04; ..... Starting the spindle or spindle 1 in the reverse
                    direction at 640 min–1
                    (For cutting such as left-hand thread)
X70.0 Z20.0 M08;
G01 Z5.0 F1.0 M24;
G92 X59.1 Z–24.0 F2.0;
    ⋮
    ⋮          Machining program
    ⋮
G00 X200.0 Z150.0 M09;
M05; ..... Stopping the spindle or spindle 1 rotation
M30;
```

The M03 (M04) command is usually specified in the "G96 S_" block at the beginning of a part program. The M05 command is specified to stop the spindle before changing the spindle rotating direction or at the end of the program.

5. M13, M14, M05 Start and Stop of Rotary Tool Spindle Rotation

The M13 and M14 commands are used to start the rotary tool spindle.
The M05 command is used to stop the rotary tool spindle rotation.

NOTE The M13 and M14 commands can be used only with the MC type machine or the Y-axis specification machine.

The M05 command is also used to stop the spindle, spindle 1, or spindle 2.

COMMAND

M13; . . . . . Specifies rotary tool spindle start in the normal direction.

Normal direction:
Clockwise rotation, viewing the workpiece from the rear of the rotary tool spindle

M14; . . . . . Specifies rotary tool spindle start in the reverse direction.

Reverse direction:
Counterclockwise rotation, viewing the workpiece from the rear of the rotary tool spindle

M05; . . . . . Specifies rotary tool spindle stop.

Stops the rotary tool spindle rotation.

CAUTION

① Do not stop the rotary tool spindle by specifying the M05 command while the cutting tool is in contact with the workpiece. This could cause damage to the cutting tool.

② Start the rotary tool spindle by executing either the M13 or M14 command before the cutting tool comes into contact with the workpiece. If the cutting tool is brought into contact with the workpiece while it is not rotating, it could be damaged.

③ Before using a rotary tool, the tool must be registered correctly. If tool registration is incorrect, the rotary tool spindle rotates in the direction opposite to the direction it should rotate. If machining is executed while the spindle is rotating in the incorrect direction, the rotary tool and the machine could be damaged.

For rotary tool registration procedure, refer to the OPERATION MANUAL separately provided.

NOTE

① Before changing the rotary tool spindle rotating direction from normal to reverse or from reverse to normal, stop the rotary tool spindle once by specifying the M05 command. After that specify the M code which calls the rotary tool spindle to rotate in the opposite direction.

If the rotary tool spindle rotating direction is changed without specifying the M05 command, an alarm message (EX0401) is displayed on the screen and the rotary tool spindle stops.

② The rotary tool spindle cannot start if the chuck is unclamped.

Before specifying the M13 or M14 command, make sure that the STATUS indicator **[CHCL]** is lit or the STATUS indicator **[CHCL]** and the status indicator **[HEADSTOCK 2 CHUCK CLAMP]** are lit.

③ Before specifying the M13 or M14 command, it is necessary to connect the C-axis by specifying the M45 or M245 command or to clamp the spindle by specifying the M68 or M268 command.

④ Before specifying the M13 or M14 command, it is necessary to specify the required spindle speed using an S code.

For the S code, refer to page D–13 (2.).

Ex. **Programming using M13 or M14**

```
O0001;
N1;
M45;
G28 H0;
G00 T0101;
G97 S600 M13; ..... Starting the rotary tool spindle in the normal
                     direction at 600 min–1
G98;
    ⋮
    ⋮          Machining program
    ⋮
G00 X200.0 Z150.0 M05; ..... Stopping the rotary tool spindle rotation
M46;
M30;
```

6. **M08, M09** Coolant Discharge ON/OFF

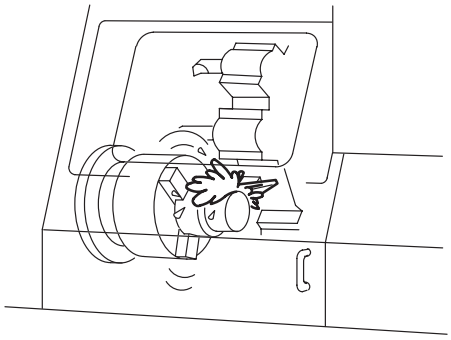

The M08 command is used to start coolant discharge.

The M09 command is used to stop coolant discharge.

COMMAND

M08; . . . . . Specifies coolant discharge ON.

M09; . . . . . Specifies coolant discharge OFF.

CAUTION

① Do not try to change the coolant nozzle setting angle or discharge volume of coolant during automatic operation. If attempted, you may be entangled with or caught between the movable parts of the machine.

② Do not discharge coolant while the spindle is not rotating.
Also when coolant is discharged while the spindle is rotating, measures must be taken so that coolant will not enter the spindle bearings. If coolant enters the spindle bearings, the spindle will be damaged.

NOTE If coolant is used for automatic operation, it is necessary to make sure that the coolant tank has sufficient volume of coolant.

For the functions of the coolant switches on the operation panel, refer to the OPERATION MANUAL separately provided.

Coolant discharge control using the coolant switches on the operation panel in combination with the M08 command is explained below:

Coolant switch (ON) (ON)

When this switch is pressed, the indicator in the switch is lit and coolant is supplied through the nozzles.
When the coolant ON M08 code is read during automatic operation (MDI, memory, or tape mode), the indicator in the switch is lit and coolant is automatically supplied.

Coolant switch (OFF) (OFF)

When this switch is pressed while coolant is being supplied, the coolant supply stops and the indicator in the (ON) (ON) switch goes off.

Pressing this switch for 1 second or more while coolant is not being supplied causes the indicator in the (ON) (ON) switch to blink.

In this state, the coolant is not supplied even if an M08 command is executed.

This feature is used when checking a program.

When the (ON) (ON) switch is pressed again, the indicator in the (ON) (ON) switch stops blinking and stays lit.

Ex. **Programming using M08 and M09**

```
O0001;
N1;
G50 S1500;
G00 T0101;
G96 S120 M03;
X75.0 Z20.0 M08; ..... Starting coolant discharge
    ⋮
    ⋮    Machining program
    ⋮
G00 Z20.0;
X200.0 Z150.0;
M01; ..... Optional stop
```

If the indicator in the optional stop switch on the operation panel is not lit:

The M01 command is ignored and the program is executed continuously.

If the M01 command is executed, coolant discharge stops. However, if the M01 command is ignored, coolant is kept discharged.

```
N2;
G50 S1500;
G00 T0202;
G96 S120 M03;
X33.0 Z20.0 M08; ..... Starting coolant discharge
```

Since coolant discharge might have been stopped by the execution of the M00 or M01 command, the M08 command must be specified at the beginning of a part program.

```
    ⋮
    ⋮    Machining program
    ⋮
G00 X200.0 Z150.0 M09; ..... Stopping coolant discharge
M05;
M30;
```

The M08 command is usually specified in the first approach operation in each part program. The M09 command is usually specified when the cutting tool retracts from the workpiece at the end of a program.

7. **M23, M24** Chamfering ON/OFF

(1) Chamfering ON (M23)

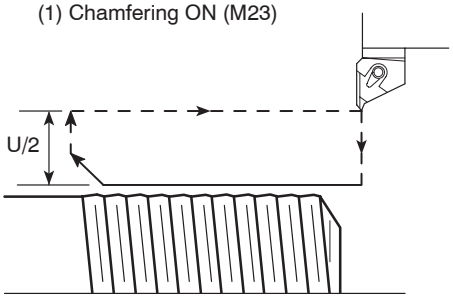

(2) Chamfering OFF (M24)

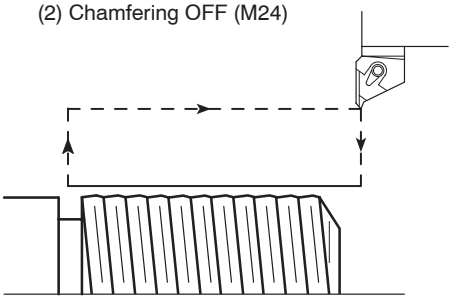

The M23 and M24 commands indicate whether or not chamfering is carried out in the thread cutting cycle called by the G92 and G76 commands.

If the thread to be cut does not have a groove at the end, as illustrated on the left, the chamfering ON command (M23) is required.

Specify the chamfering OFF command (M24) when the thread has a groove at the end, as illustrated to the left, and chamfering is not necessary.

NOTE Distance U/2 must be greater than chamfering distance.

← – – – Rapid traverse

←——— Cutting feed

COMMAND

M23; . . . . . Specifies chamfering ON.

Calls the chamfering ON mode.

M24; . . . . . Specifies chamfering OFF.

Cancels the chamfering ON mode.

CAUTION Pay sufficient care to possible interference between the cutting tool and the workpiece when carrying out chamfering.

NOTE Chamfering distance (r) as in the illustration can be set for parameter No. 5130.

Chamfering angle is 45° .

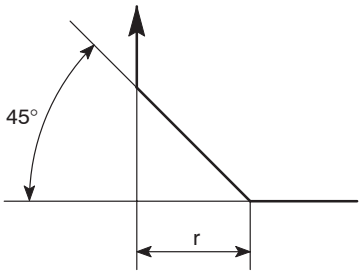

Ex. **Programming using M23 or M24**

To cut a M30 × P2.0 thread, having effective thread length of 50 mm.

(Material: AISI 1045 (carbon steel), Cutting feedrate: 120 m/min)

(1)

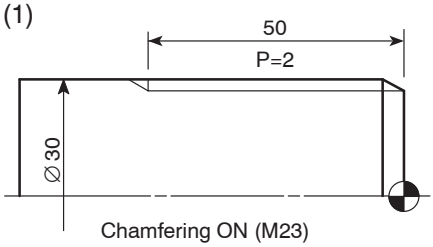

Chamfering ON (M23)

(2)

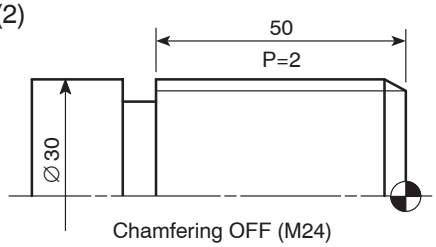

Chamfering OFF (M24)

```
O0001;
N1;
G50 S1500;
G00 T0101;
G97 S1200 M03;
X60.0 Z20.0 M08;
G01 Z10.0 F1.0 M23(M24); ..... <M23> For the workpiece which has the shape
                                     as illustrated in (1), chamfering is
                                     executed if the G92 command is
                                     specified after the M23 command.
                              <M24> For the workpiece which has the shape
                                     as illustrated in (2), chamfering is not
                                     executed if the G92 command is
                                     specified after the M24 command.
G92 X29.4 Z–55.0 F2.0; ..... Starting the G92 thread cutting cycle
```

In the case of (1):

The Z coordinate of the thread end point (Z–55.0) is “effective thread length + chamfering distance”.

In the case of (2):

The Z coordinate of the thread end point (Z–55.0) is “effective thread length + incomplete thread length L_2”.

For the “incomplete thread length L_2” refer to page B–35.

```
X28.9;
X28.5;
X28.1;                .... The G92 thread cutting cycle is executed at each
X27.8;                      thread cutting diameter.
X27.56;                     The final thread cutting diameter is X27.26.
X27.36;
X27.26;
G00 X200.0 Z150.0 M09;
M01;
```

NOTE

For details of the depth of cut and the number of passes, refer to page B–38.

However, the values given in the table are only for reference.
The depth of cut and the number of passes should be determined according to actual machining status. Use the thread gage to check the machined thread accuracy.

8. **M10, M210, M11, M211** Chuck Clamp/Unclamp

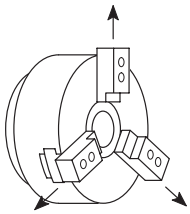
Unclamp

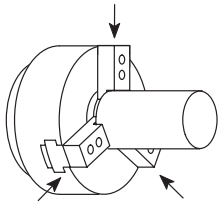
Clamp

The chuck or the spindle 1 chuck clamps a workpiece when the M10 command is executed.

The spindle 2 chuck clamps a workpiece when the M210 command is executed.

The M11 command is used to unclamp the chuck or the spindle 1 chuck.

For unclamping the spindle 2 chuck, the M211 command is used.

These M codes are used to continuously machine workpieces in the machine equipped with a bar feeder or a loader. They are also used for carrying out both-center work or transferring a workpiece between the spindles.

NOTE The M210 and M211 commands are used only for the SL-S series machines.

COMMAND

M10; ..... Specifies chuck or spindle 1 chuck clamp.

The chuck or spindle 1 chuck clamps a workpiece in it.

M210; .... Specifies spindle 2 chuck clamp.

The spindle 2 chuck clamps a workpiece in it.

M11; ..... Specifies chuck or spindle 1 chuck unclamp.

The chuck or spindle 1 chuck unclamps a workpiece.

M211; .... Specifies spindle 2 chuck unclamp.

The spindle 2 chuck unclamps a workpiece.

CAUTION

① Do not execute the M11 or M211 command when a workpiece is clamped by the chuck with the single block switch set ON. If the M11 or M211 command is executed under such status, the machine stops operating due to the chuck interlock function causing the workpiece to fall which could damage the machine.

② Specify the M10, M210, M11, or M211 command in a block without other commands, and specify the G04 command in the next block to allow the chuck to complete the clamp or unclamp operation correctly. Since the time required for the chuck to carry out the clamp or unclamp operation varies depending on the chuck type and chucking pressure, the dwell time should be a little longer than the actual clamp/unclamp time.

NOTE

① At the start of an operation, the workpiece must be clamped manually. This is because the automatic operation cannot be started with the chuck in the unclamp state due to the chuck interlock function.

② The chucking direction (O.D. chucking, I.D. chucking) can be changed using the “CHUCK DIRECTION” or “CHUCK1 DIRECTION” and “CHUCK2 DIRECTION” on the OPERATION PANEL screen.

For the procedure used for changing the chucking direction, refer to the OPERATION MANUAL separately provided.

③ Due to the chuck interlock function, the M11 command must not be specified while the spindle or spindle 1 is rotating. Similarly, the M211 command must not be specified while spindle 2 is rotating.

④ Due to the chuck interlock function, the M11 and M211 commands must not be specified while the rotary tool spindle is rotating.

Ex. **Programming using M10 and M11**

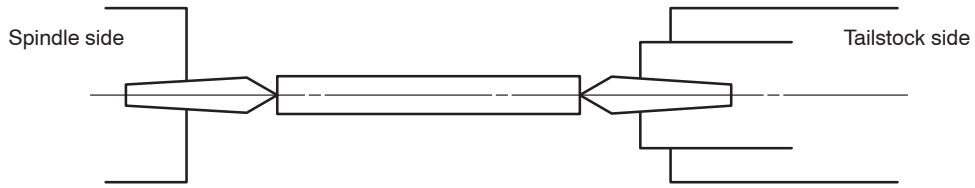

For both-center work, the M11 command may be used to ensure safe operation.

```
O0001;
N1;
     ⋮
     ⋮          Machining program
     ⋮
M05; ..... Stopping the spindle rotation
M01;
M11; ..... The chuck unclamps.
           The STATUS indicator [ CHCL ] goes off.
M30; ..... Ends program execution and automatic operation
           stops.
           The NC is reset and the cursor returns to the start
           of the program (O0001).
```

NOTE

To start the next cycle after changing the workpiece, it is necessary to step on the footswitch to turn on the STATUS indicator **[CHCL]**. Otherwise, the chuck interlock function disables the cycle start.

WARNING

In machining programs for both-center-work, specify the M11 command to unclamp the chuck before the M30 command to reset and rewind the program. If the M11 command is not executed and the ST (ST) switch is pressed by mistake, automatic operation will start and the operator may be injured.

However, if the M11 command is executed when the center at the spindle side is held by the chuck during programming, the center will fall or shift, which in turn will cause the workpiece to fall, damaging the machine. If the center at the spindle side is held by the chuck, do not execute the M11 command. (Applies only to machines equipped with a tailstock.)

As explained above, although the M11 command does not work to clamp/unclamp a workpiece actually, it calls for the chuck interlock function to ensure safe operation.

Ex. **Programming using M210 or M211**

To transfer a workpiece machined in spindle 1 from spindle 1 to spindle 2

```
O0001;
N1;
     ⋮
     ⋮          Machining program (machining of a workpiece in spindle 1)
     ⋮
N5;
G59; ..... Selecting the G59 work coordinate system
           (for workpiece transfer)
G97 S1000 M03; ..... Starting spindle 1 in the normal direction at
                     1000 min−1
M35; ..... Specifying the speed synchronized operation
           mode
M211; ..... Unclamping chuck 2
           The spindle 2 rotates in the reverse direction at
           100 min−1 with the chuck unclamped.
```

NOTE In the synchronous operation mode, it is possible to rotate the spindle even if the chuck is unclamped.

```
(G30 P3 V0;) ..... Returning the Y-axis to the 3rd zero point
(G30 P3 U0;) ..... Returning the X-axis to the 3rd zero point
G00 B_ ;
G98 G01 B_ F1000;
G38 J_ K_ F_ Q_ ; ..... Detecting the pushing of workpiece
```

NOTE Chuck 2 clamp operation is included.

Therefore, it is not necessary to specify the M210 command.

```
G99;
     ⋮
     ⋮          Machining program (Cutting off of workpiece)
     ⋮
M36; ..... Canceling the speed synchronized operation mode
G54; ..... Selecting the G54 work coordinate system
G28 B0;
(G28 U0;) ..... Returning the X-axis to the machine zero point
(G28 V0;) ..... Returning the Y-axis to the machine zero point
M01;
     ⋮
```

NOTE Commands in ( ) can be specified only for the Y-axis specification SL-S series.

9. **M25, M26** Tailstock Spindle IN/OUT

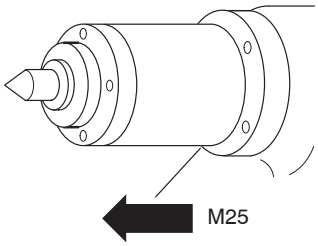

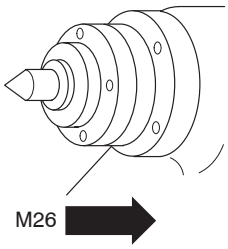

The M25 command moves the tailstock spindle out from the tailstock body.

The M26 command moves the tailstock spindle into the tailstock body.

The M25 and M26 commands are used to move the tailstock spindle in or out for center work operation.

NOTE
① The M25 and M26 commands can be used only for the machines equipped with the tailstock.

② The M25 and M26 commands are used in combination with the loader or robot system or other peripheral equipment.

COMMAND

M25; ..... Specifies tailstock spindle OUT.

M26; ..... Specifies tailstock spindle IN.

WARNING

Always disable the tailstock spindle interlock function when carrying out center-work operations using M25. Automatic operation cannot be started in the state the tailstock spindle interlock function set on. Before starting center-work operation, however, make sure that M25 is correctly specified in a program and a workpiece is correctly supported by the tailstock spindle by checking the program and carrying out test cutting. If center-work operation is started carelessly, the workpiece will fly out, causing serious injuries or damage to the machine.

CAUTION

① Specify the M25 command (to extend the tailstock spindle) or M26 command (to retract the tailstock spindle) in a block without other commands, and specify the G04 command in the next block to suspend program operation for a period long enough to allow the tailstock spindle to extend and the center to hold the workpiece correctly, or long enough to allow the tailstock spindle to retract into the tailstock correctly.

If G04 is not specified in the block following the M25 or M26 block, the next block will be executed before the workpiece is held by the center properly, or before the tailstock spindle has retracted properly; the tool, holder, or turret head will then interfere with the tailstock spindle or tailstock spindle center, damaging the machine.

The period of time specified for suspension of program execution should be longer than the time required to extend or retract the tailstock spindle. (Applies only to machines equipped with a tailstock.)

CAUTION

② When a workpiece is held by the tailstock, execute the M26 command (tailstock spindle IN) after securely supporting the workpiece by the crane or other appropriate means. If the M26 command is carelessly executed although the workpiece is not supported securely by appropriate means, the workpiece is held only by the chuck after the retraction of the tailstock spindle. This could cause the workpiece to fall and damage the machine.

For the details how to use the tailstock interlock function, refer to the OPERATION MANUAL separately provided.

Ex. **Programming using M25 and M26 (1)**

```
O0001;
N1;
G50 S1000;
G00 T0101;
G97 S1000 M03;
    ⋮
    ⋮          Facing or center drilling program
    ⋮
G00 X200.0 Z150.0 M09; ..... Positioning of the turret head at a rapid traverse
                             rate to a position where interference does not
                             occur if the tailstock spindle moves
M05; ..... Stopping spindle rotation
M01;

N2;
M25; ..... Moving the tailstock spindle OUT to push the
                             workpiece by its center
G04 U_ ; ..... Calling for dwell; program execution is suspended
                             until the workpiece is securely pushed by the
                             tailstock spindle center.
```

NOTE The time required for the tailstock spindle center to hold the workpiece securely varies according to the tailstock spindle thrust and the tailstock body position. Determine the dwell period taking these into consideration.

For the procedure used for adjusting the tailstock spindle thrust, refer to the OPERATION MANUAL separately provided.

```
G50 S1500;
G00 T0202;
G96 S100 M03;
```

G00 X60.0 Z20.0 M08; . . . . . Positioning of the cutting tool at a rapid traverse rate to a position avoiding interference with the tailstock body

⋮

⋮ Machining program

⋮

G00 X200.0 Z150.0 M09;

M05; . . . . . Stopping the spindle rotation

M26; . . . . . The tailstock spindle retracts into the tailstock body.

⋮

Always stop the spindle before moving the spindle IN/OUT by specifying the M05 command.

Programming using M25 and M26 (2)

An example of program used for the machine equipped with programmable tailstock.

O0001;

N1;

G50 S1000;

G00 T0101;

G97 S1000 M03;

⋮

⋮ Facing or centering program

⋮

G00 X200.0 Z150.0 M09; . . . . . Stopping coolant discharge

M05; . . . . . Stopping spindle rotation

M01;

N2;

G479 V_ ; . . . . . Moving the tailstock to the position specified by V_ (machine coordinate value)

M25; . . . . . The tailstock spindle moves out.
The tailstock spindle center pushes the workpiece to hold it.

G04U_ ; . . . . . Calling for dwell; program execution is suspended until the workpiece is securely held by the tailstock spindle center.

NOTE The time required for the tailstock spindle center to hold the workpiece securely varies according to the tailstock spindle thrust and the tailstock body position. Determine the dwell period taking these into consideration.

For the procedure used for adjusting the tailstock spindle thrust, refer to the OPERATION MANUAL separately provided.

G50 S1000;
G00 T0202;
G96 S100 M03;
⋮
⋮ Machining program
⋮

G28 U0; . . . . . Machine zero return of X-axis to avoid interference with the tailstock

M05;
M26; . . . . . The tailstock spindle moves IN.
G04 U_ ; . . . . . Calling for dwell to allow tailstock spindle to correctly extract into the tailstock body
G479 V_ ; . . . . . Moving the tailstock to the previously located position, specified by V_ (machine coordinate value)
⋮

10. **M34, M35, M36** Synchronized Operation ON/OFF

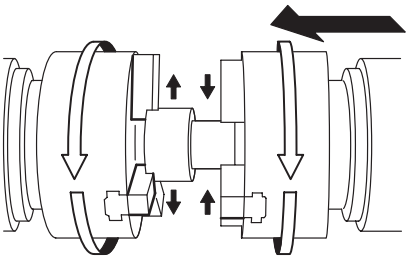

The M34 command is used to synchronize both spindle speeds and spindle phases between spindles 1 and 2.
The M35 command is used to synchronize only spindle speeds between spindles 1 and 2.
The M36 command cancels the synchronized operation mode.

NOTE

① The M34, M35, and M36 commands can be used only for the SL-S series machines.

② With the SL-S series machine equipped with the Y-axis, return the Y-axis and then the X-axis to the respective 3rd zero point when moving spindle 2 (B-axis) for transferring a workpiece from spindle 1 to spindle 2. If spindle 2 (B-axis) is moved although both the Y- and X-axes not returned to the 3rd zero point, the machine stops with the corresponding alarm message displayed on the screen. After returning spindle (B-axis) to the machine zero point on completion of workpiece transfer, return the X- and Y-axes to the respective machine zero point in this order.

COMMAND

M34; . . . . . Calls the phase synchronized operation mode.

M35; . . . . . Calls the speed synchronized operation mode.

M36; . . . . . Cancels the phase and/or speed synchronized operation mode.

NOTE

① To transfer a workpiece from spindle 1 to spindle 2, synchronize the spindle speeds of these spindles by specifying the M35 command. If a workpiece is transferred without synchronizing the spindle speeds, the workpiece will be scratched.

② To transfer a hexagonal bar, it is necessary to synchronize spindles 1 and 2 both in speeds and phases by specifying the M34 command. Unless the spindles are synchronized both in speeds and phases, transfer of a hexagonal bar is not possible.

③ The M36 command should be specified only after the completion of cut-off cycle or when either of spindle 1 or spindle 2 chuck is unclamped.

④ If the M34 command is specified while the spindle 2 chuck is clamped, an alarm message (EX2419) is displayed on the screen.

⑤ Do not specify the M05 command in the phase synchronization operation mode or the speed synchronization operation mode. If the M05 command is specified in these modes, spindles 1 and 2 stop rotating in synchronization and the phase synchronization operation mode or the speed synchronization operation mode is canceled.

It is allowed to use the M34 command for transferring a workpiece having round section shape. However, since spindle speed synchronization control is executed after the completion of phase synchronization, it takes a long time to synchronize both the speeds and phases. To shorten idle time, it is recommended to specify the M35 command if the workpiece has a round section.

Ex. **Programming using M34, M35, and M36 (1)**

To transfer a workpiece, machined in spindle 1, from spindle 1 to spindle 2 by synchronizing the spindles.

```
O0001;
N1;
     ⋮
     ⋮          Machining program (machining of a workpiece in spindle 1)
     ⋮
N5;
```

G59; ..... Selecting the G59 work coordinate system (for workpiece transfer)

G97 S1000 M03; ..... Starting spindle 1 in the normal direction at 1000 min^{-1}

M34; ..... Specifying the phase synchronized operation mode

NOTE After the synchronization of the phases of the spindles, the speeds of both of the spindles are synchronized at 1000 min^{-1}.

M211; ..... Unclamping chuck 2

The spindle 2 rotates in the reverse direction at 1000 min^{-1} with the chuck unclamped.

NOTE In the synchronous operation mode, it is possible to rotate the spindle even if the chuck is unclamped.

(G30 P3 V0;) ..... Returning the Y-axis to the 3rd zero point

(G30 P3 U0;) ..... Returning the X-axis to the 3rd zero point

G00 B_ ; ..... Moving headstock 2 to the approach position B_ (work coordinate system)
(First approach)

G98 G01 B_ F1000; ..... Approaching of headstock 2 to workpiece at the feedrate of 1000 mm/min
(Second approach)

G38 J_ K_ F_ Q_ ; ..... Detecting the pushing of workpiece

NOTE Chuck 2 clamp operation is included.

G99; . . . . . Specifying the feed per revolution mode

⋮

⋮ Machining program (Cutting off of workpiece)

⋮

M36; . . . . . Canceling the phase synchronized operation mode

NOTE Spindle 2 stops rotating while spindle 1 keeps rotating at the specified speed.

G54; . . . . . Selecting the G54 work coordinate system

G28 B0; . . . . . Returning the B-axis (spindle 2) to the machine zero point

(G28 U0;) . . . . . Returning the X-axis to the machine zero point

(G28 V0;) . . . . . Returning the Y-axis to the machine zero point

M01;

NOTE Commands in ( ) can be specified only for the Y-axis specification SL-S series.

Ex. **Programming using M34, M35, and M36 (2)**

To transfer a workpiece, machined in spindle 1, from spindle 1 to spindle 2 by synchronizing the spindle speeds.

O0001;
N1;
⋮
⋮ Machining program (machining of a workpiece in spindle 1)
⋮
N5;
G59; ..... Selecting the G59 work coordinate system (for workpiece transfer)
G97 S1000 M03; ..... Starting spindle 1 in the normal direction at 1000 min^{-1}
M35; ..... Specifying the speed synchronized operation mode

NOTE The speeds of both of the spindles are synchronized at 1000 min^{-1}.

M211; ..... Unclamping chuck 2

The spindle 2 rotates in the reverse direction at 1000 min^{-1} with the chuck unclamped.

NOTE In the synchronous operation mode, it is possible to rotate the spindle even if the chuck is unclamped.

(G30 P3 V0;) ..... Returning the Y-axis to the 3rd zero point
(G30 P3 U0;) ..... Returning the X-axis to the 3rd zero point
G00 B_ ; ..... Moving headstock 2 to the approach position B_ (work coordinate system)
(First approach)
G98 G01 B_ F1000; ..... Approaching of headstock 2 to workpiece at the feedrate of 1000 mm/min
(Second approach)
G38 J_ K_ F_ Q_ ; ..... Detecting the pushing of workpiece

NOTE Chuck 2 clamp operation is included.

G99; ..... Specifying the feed per revolution mode
⋮
⋮ Machining program (Cutting off of workpiece)
⋮
M36; ..... Canceling the speed synchronized operation mode

NOTE Spindle 2 stops rotating while spindle 1 keeps rotating at the specified speed.

G54; . . . . . Selecting the G54 work coordinate system
G28 B0; . . . . . Returning the B-axis (spindle 2) to the machine zero point
(G28 U0;) . . . . . Returning the X-axis to the machine zero point
(G28 V0;) . . . . . Returning the Y-axis to the machine zero point
M01;
⋮

NOTE Commands in ( ) can be specified only for the Y-axis specification SL-S series.

11. **M45, M245, M46** C-axis Connection and Cancel

When the M45 command is specified, the spindle or spindle 1 functions as the C-axis.

When the M245 command is specified, the spindle 2 functions as the C-axis.

When the M46 command is specified, the C-axis function of the spindle, spindle 1, or spindle 2 is canceled.

NOTE The M45, M245, and M46 commands can be used only for the MC type or Y-axis specification machines. The M245 command can be used only for the MC type or Y-axis specification SL-S series machines.

By specifying the M45 or M245 command in the automatic or MDI mode, it is possible to index the spindle, spindle 1, or spindle 2 in the required angular position to carry out hole machining on the workpiece circumference or end face.

In the M45 or M245 mode, it is also possible to control spindle rotation in synchronization with the tool movement to cut notches or grooves.

COMMAND

M45; . . . . . Calls C-axis connection for the spindle or spindle 1

M245; . . . . Calls C-axis connection for spindle 2

M46; . . . . . Cancels C-axis connection for the spindle, spindle 1, or spindle 2

CAUTION With the SL-S series machines, the chuck interlock function is valid only for the spindle for which the M code is specified last if more than one of the M45 (C-axis connection for spindle 1), M245 (C-axis connection for spindle 2), M68 (spindle brake clamp for spindle 1), and M268 (spindle brake clamp for spindle 2) are specified in the same block, and the chuck interlock function is not valid for the other spindle. Therefore, machining must be carried out using the spindle corresponding to the M code specified last. If machining is carried out using the other spindle, the rotary tool spindle does not stop even if the chuck is unclamped during machining causing falling or flying out of the workpiece, which could damage the machine.

NOTE

① Stop the spindle, spindle 1, or spindle 2 by specifying the M05 command before specifying the M45 or M245 command. If the M45 or M245 command is specified although the spindle, spindle 1, or spindle 2 is rotating, the machine stops with alarm message (EX1424) displayed on the screen.

② Before specifying the M46 command, it is necessary to stop rotary tool spindle by specifying the M05 command. If the M46 command is specified although the rotary tool spindle has not been stopped, an alarm message (EX1426) is displayed on the screen and the machine stops.

③ With the SL-S series machines, it is not necessary to cancel the C-axis function once by specifying the M45 command when changing the C-axis state from M45 to M245 state or from M245 to M45 state.

NOTE

④ With the SL-S series machines, both of spindles 1 and 2 function as the C-axis if either the M45 or M245 command is specified. To carry out turning by using either spindle 1 or spindle 2, cancel the C-axis function for both of spindles 1 and 2 by specifying the M46 command.

⑤ With the SL-S series machines, it is necessary to return the C-axis to the machine zero point to carry out machining using spindle 2 after carrying out machining using spindle 1.

⑥ After finishing the operation performed in the C–axis connection mode, called by the M45 or M245 command, always specify the M46 command at the end of a program.

Ex. **Programming using M45 and M46**

```
O0001;
N1;
G98 ..... Specifying the feed per minute mode
M45; ..... Connecting the spindle or spindle 1 as the C-axis
G28 H0; ..... Returning the C-axis to the machine zero point
G00 T0101;
G97 S500 M13; ..... Starting the rotary tool spindle in the normal
                    direction at 500 min–1
    ⋮
    ⋮          Machining program
    ⋮
G28 U0 M05; ..... Returning the X-axis to the machine zero point
                  Stopping the rotary tool spindle
G28 W0; ..... Returning the Z-axis to the machine zero point
M46; ..... Canceling the C-axis connection
G99; ..... Specifying the feed per revolution mode
M30;
```

12. **M47** Workpiece Ejector OUT

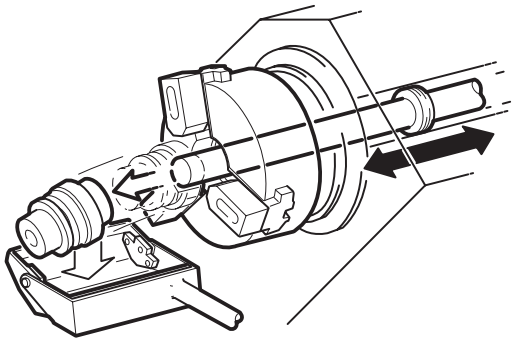

The M47 command is used to eject the workpiece, finished in the spindle 2, from the chuck.

NOTE

① The M47 command can be used only for the SL-S series machines.

② Usually, the M47 command is used in combination with the M73 parts catcher OUT command and M74 parts catcher IN command. For the machine equipped with the loader, these M codes (M47, M73, and M74) are optional.

For details of the M73 and M74 commands, refer to page C–57 (16.).

COMMAND

M47; . . . . . Specifies the workpiece ejector OUT.

NOTE

① When specifying the M47 command, it is necessary to stop spindle 2 by specifying the M05 command. The workpiece ejector does not start if the spindle is not stopped.

② The chuck on spindle 2 is automatically unclamped if the M47 command is specified.

Ex. **Programming using M47**

O0001;
⋮
⋮ Machining program
⋮ (machining of a workpiece in spindle 2)
⋮

M05; ..... Stopping spindle 2
(G30 P3 V0;) ..... Returning the Y-axis to the 3rd zero point
(G30 P3 U0;) ..... Returning the X-axis to the 3rd zero point
G53 B_ ; ..... Moving spindle 2 to the position where the workpiece is dropped into the parts catcher

CAUTION

The parts catcher operates disregarding of the turret position.

For the coordinate value of the B-axis, specify the position where the parts catcher can receive the workpiece correctly without causing interference between the moved out parts catcher and spindle 2, turret head, etc. Note that parts catcher OUT operation is not possible if the B-axis is at a position 40 mm or more in the negative side in the machine coordinate system.

M73; ..... Parts catcher OUT
M47; ..... Workpiece ejector OUT
M252; ..... Turning ON in-spindle air blow (spindle 2)
G04 U_ ; ..... Dwell
G28 B0; ..... Moving spindle 2 to the machine zero point
(G28 U0;) ..... Returning the X-axis to the machine zero point
(G28 V0;) ..... Returning the Y-axis to the machine zero point
M74; ..... Parts catcher IN
M257; ..... Turning OFF in-spindle air blow (spindle 2)
M251; ..... Spindle air blow ON (spindle 2)
G04 U_ ; ..... Dwell
M259; ..... Spindle air blow OFF (spindle 2)
⋮

NOTE Commands in ( ) can be specified only for the Y-axis specification SL-S series.

13. **M48, M49** Feedrate Override Cancel OFF/ON

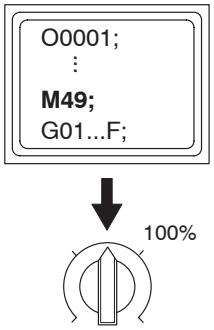

The override setting for cutting feedrate during automatic operation is canceled when the M49 command is executed. In this mode, axis feedrate is fixed to the one programmed by the F code. Therefore, if the setting for the feedrate override dial on the operation panel is not 100%, the setting is ignored and it is assumed to be 100%.

In daily operation, the M48 and M49 commands are rarely used. In test cut, these M codes may be used. That is, the M48 command is specified in a program so that cutting feedrates may be adjusted to meet actual machining status.

After determining proper feedrates, the M49 command should be specified in a program so that mass production may be executed by using the fixed feedrates.

COMMAND

M48; . . . . . Specifies feedrate override cancel OFF.

M49; . . . . . Specifies feedrate override cancel ON.

CAUTION

When the M49 command is executed, the setting of the override dial is ignored and actual movement commands are all executed at the programmed feedrates. In this mode, actual feedrates cannot be set faster than the programmed feedrates.

However, if this command is specified in a program, it is impossible to lower the actual feedrate by using the feedrate override dial even if the programmed feedrate seems too fast.

NOTE

① During thread cutting, feedrate must be kept constant. The override function is automatically ignored if the G code calling thread cutting operation is executed. Therefore, it is not necessary to specify the M48 and M49 commands in a program for thread cutting operation.

② During tapping, feedrate must be kept constant. The override function is automatically ignored if the G code calling tapping operation is executed. Therefore, it is not necessary to specify the M48 and M49 commands in a program for tapping operation.

③ The M48 and M49 commands are not valid for rapid traverse operation. Therefore, the rapid traverse rate override switch is operative while the M49 command is valid.

Ex. **Programming using M48 and M49**

NOTE The following program should be executed while the block delete switch on the operation panel is set OFF.

```
O0001;
N1;
G50 S1500;
G00 T0101;
G96 S120 M03;
     ⋮
     ⋮          Machining program
     ⋮
G00 X70.0 Z20.0;
G01 Z2.0 F0.3;
/M49; ..... Making the override for cutting feed invalid
```

Since the slash (/) code is entered, execution of this block is controlled by the setting of the block delete switch on the operation panel.

If the block delete switch is active (the indicator in the switch is lit):

Ignores this block and therefore the M49 command is not executed. The following blocks are executed with the feedrate override function valid.

If the block delete switch is not active (the indicator in the switch is not lit):

Executes the M49 command. According to the execution of the M49 command, the override for cutting feed is made invalid and following blocks are executed with 100% of feedrate.

```
Z–20.0 F0.2; ..... The feedrate for Z-axis movement is fixed at
                   0.2 mm/rev and the cutting tool is moved to Z–20.0
                   along the Z-axis at this feedrate.
X102.0; ..... Moving the cutting along the X-axis to X102.0 at
              the fixed feedrate of 0.2 mm/rev
/M48; ..... Making override for cutting feed valid
            After the execution of this command, the override
            switches on the operation panel are valid.
     ⋮
```

14. **M68, M268, M69** Spindle Brake Clamp and Unclamp

When the M68 command is specified, the brake of the spindle or spindle 1 is clamped.

When the M268 command is specified, the brake of spindle 2 is clamped.

When the M69 is specified the brake of the spindle, spindle 1, or spindle 2 is unclamped.

The spindle brake holds the spindle in the stopped state.

NOTE The M68, M268, and M69 commands can be used only for the MC type or Y-axis specification machines. The M268 command can be used only for the MC type or Y-axis specification SL-S series machines.

① When carrying out hole machining or heavy-duty cutting at the desired position in the end face or circumference of the workpiece, specify the M68 or M268 command while the spindle, spindle 1 or spindle 2 is stopped to apply powerful brake.

② To carry out ordinary turning operation, specify the M69 command to unclamp the brake of the spindle, spindle 1, or spindle 2.

COMMAND

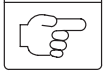

M68; . . . . . Specifies clamping of the spindle or spindle 1 brake

M268; . . . . Specifies clamping of the spindle 2 brake

M69; . . . . . Specifies unclamping of the spindle brake

CAUTION

With the SL-S series machines, the chuck interlock function is valid only for the spindle for which the M code is specified last if more than one of the M45 (C-axis connection for spindle 1), M245 (C-axis connection for spindle 2), M68 (spindle brake clamp for spindle 1), and M268 (spindle brake clamp for spindle 2) are specified in the same block, and the chuck interlock function is not valid for the other spindle. Therefore, machining must be carried out using the spindle corresponding to the M code specified last. If machining is carried out using the other spindle, the rotary tool spindle does not stop even if the chuck is unclamped during machining causing falling or flying out of the workpiece, which could damage the machine.

NOTE ① When specifying the M68 or M268 command in the state the C-axis is not connected, stop the spindle, spindle 1 or spindle 2 by specifying the M05 command. If the M68 or M268 command is specified although the spindle, spindle 1, or spindle 2 has not stopped, an alarm message (EX1424) is displayed on the screen and the machine stops.

② When specifying the M69 command in the state the C-axis is not connected, stop the rotary tool spindle by specifying the M05 command. If the M69 command is specified although the rotary tool spindle has not stopped, an alarm message (EX1426) is displayed on the screen and the machine stops.

③ With the SL-S series machines, it is not necessary to unclamp the spindle brake once by specifying the M69 command when changing the spindle brake clamp state from M68 to M268 state or from M268 to M68 state.

NOTE

④ With the SL-S series machines, spindle brake is clamped for both of spindles 1 and 2 if either of the M68 and M268 commands is specified. To carry out turning by using either spindle 1 or spindle 2, unclamp the spindle brake for both of spindles 1 and 2 by specifying the M69 command.

⑤ With the SL-S series machines, it is not possible to specify the M268 command in the block that contains the hole machining canned cycle command. Note that for the execution of the synchronized tapping cycle called by the G384 command, designation of “M268.” is used for the command to clamp the spindle 2 brake.

Ex. **Programming using M68 and M69**

```
O0001;
N1;
G98 ..... Specifying the feed per minute mode
M45; ..... Connecting the spindle or spindle 1 as the C-axis
G28 H0; ..... Returning the C-axis to the machine zero point
G00 T0101;
G97 S500 M13; ..... Starting the rotary tool spindle in the normal
                    direction at 500 min–1
Z5.0
M68; ..... Clamping spindle brake for the spindle or spindle 1
    ⋮
    ⋮          Machining program
    ⋮
G28 U0 M05; ..... Returning the X-axis to the machine zero point
                  Stopping the rotary tool spindle
G28 W0 M69; ..... Returning the Z-axis to the machine zero point
                  Unclamping the spindle brake
M46; ..... Canceling the C-axis connection
G99; ..... Specifying the feed per revolution mode
M30;
```

15. **M70, M483, M482** Bar Feeder Operation, Bar Feed OFF, Bar Stock Change

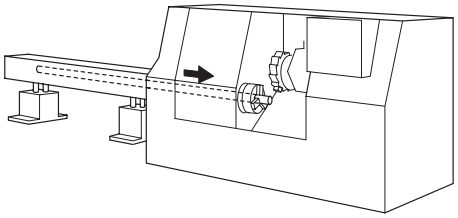

When the machine is equipped with a bar feeder (single bar stock or multiple bar stocks) of Alps, a bar stock is supplied from the bar feeder into the machine when the M70 command is specified.

With the bar feeder (multiple bar stocks) of LNS, when the M70 command is specified, a bar stock is supplied from the bar feeder into the machine, and bar feed is stopped when the M483 command is specified. The M482 command is used to supply new bar stock from the stocker to the bar feeder.

NOTE The M70, M483 and M482 commands can be used only for the machine equipped with the bar feeder.

COMMAND

M70; . . . . . Specifies bar feeder operation.

M483; . . . . Turns bar feeder operation OFF.

M482; . . . . Supplies new bar stocks to the bar feeder.

CAUTION When using a bar feeder, check the length, mass, and diameter of the bar stock to be handled. The bar stock exceeding the capacity of the bar feeder must not be used.

NOTE ① Before feeding a bar stock into the machine by the M70 command, unclamp the chuck by specifying the M11 command. After the bar feeder has fed the bar stock into the machine, clamp the chuck by specifying the M10 command.

② The following four types of bar feeders are provided.

– Type 1 (Alps, single-stock specification)

– Type 2 (Alps, multi-stock specification)

– Type 3 (LNS, single-stock specification)

– Type 4 (LNS, multi-stock specification)

The correspondence between usable M codes and the bar feeder types is indicated below.

	Type 1	Type 2	Type 3	Type 4
M70	○	○	×	○
M483	×	×	×	○
M482	×	○*	×	○

* With the ASQ-80 and ASQ-51 only, new bar stocks can be supplied from the stocker to the bar feeder by specifying the M482 command.

Determine the length the bar stock is fed into the machine by the bar feeder in the manner indicated below:

1) Mount a workpiece stopper in the turret head.
2) Feed the bar stock into the machine by executing the M70 command.
3) Bar stock feed stops when a preset time has elapsed after the contact of the bar stock with the bar stopper.

Ex. **Programming using M70**

The following is an example program for the machine equipped with the bar feeder.

(Type 1)

```
O1;
N1;
     ⋮
     ⋮          Machining program
     ⋮
```

M05; . . . . . Stopping the spindle rotation

M11; . . . . . Chuck unclamp

G04 U_ ; . . . . . Calling for dwell; program execution is suspended to allow the chuck to unclamp correctly.

NOTE Since the time required for the chuck to carry out unclamp operation varies depending on the chuck type and chucking pressure, the dwell time should be specified meeting actual conditions.

M70; . . . . . Feeding the bar stock from the bar feeder to the machine

M10; . . . . . Chuck clamp

G04 U_ ; . . . . . Calling for dwell; program execution is suspended to allow the chuck to clamp the workpiece correctly.

NOTE Since the time required for the chuck to carry out clamp operation varies depending on the chuck type and chucking pressure, the dwell time should be specified meeting actual conditions.

/M99 P100; . . . . . To carry out mass production, make the block delete function invalid so that the “M99 P100;” block is executed. The “M99 P100;” jumps the program flow to the sequence labeled “N100;”. When the block delete function is invalid, the cycle illustrated on the right is repeated to machine workpieces continuously. To finish automatic continuous operation, make the block delete function valid to skip the “M99 P100;” block.

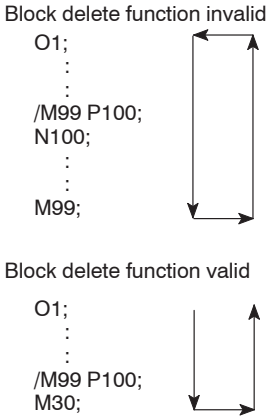

In this case, the M30 command in the next block is executed, ending the program. The cursor returns to the start of the program and the machine stops.

For the details how to use the block delete function, refer to the OPERATION MANUAL separately provided.

```
M30;

N100;
G50 S2000;
G00 T0101;
      ⋮
      ⋮              Machining program
      ⋮
M01;
M99;
```

16. **M73, M74** Parts Catcher IN/OUT

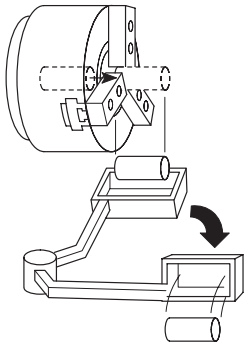

When the M73 command is executed, the parts catcher swings into the position beneath the chuck where it receives the finished workpiece.

When the M74 command is executed, the parts catcher swings back to the clear position where the finished workpiece is discharged from the parts catcher.

NOTE

① With the SL-S series machines, the M73 and M74 commands are standard. For the machines equipped with the loader, these M codes are optional.

② With the SL series machines (excludes the SL-400 series and the SL-600 series), the M73 and M74 commands are optional.

③ With the VL, TL, LL, SL-400, and SL-600 series machines, the M73 and M74 command cannot be used.

④ The parts catcher operation mechanism will be different from that illustrated in the diagram on the left depending on the machine models and specifications.

COMMAND

M73; . . . . . Specifies parts catcher OUT.

M74; . . . . . Specifies parts catcher IN.

CAUTION

① When the M73 command is specified, make sure that the turret head is retracted to a position where it will not interfere with the parts catcher when it swings out to the chuck side position. Interference could damage the machine.

② If the mass of workpiece exceeds the capacity of the parts catcher, do not use the parts catcher to unload the workpiece from the machine. If such workpieces are handled by the parts catcher, it will damage the machine.

NOTE

① Specify the M73 and M74 commands independently without other commands.

② With the SL-S series machine, it is necessary to move spindle 2 (B-axis) to an appropriate ejection position in the parts catcher side when ejecting a workpiece after swinging out the parts catcher to the chuck side. However, moving spindle 2 (B-axis) to the parts catcher side excessively with the parts catcher swung out to the chuck side may cause an interference between spindle 2 (B-axis) and the parts catcher. To avoid such an interference, parameter is set before shipping the machine to disable M73 if spindle 2 (B-axis) is positioned at –40 mm (in the machine coordinate system) or in the negative side exceeding this point. This value should be changed by users, however, according to the dimensions of the chuck, the jaws, and the workpiece. If it is necessary to change the value, please contact Mori Seiki.

③ With the SL-S series machine, spindle 2 (B-axis) cannot be moved in the negative direction if the parts catcher has swung out to the chuck side.

Ex. **Programming using M73 and M74**

The following is an example program for SL-S series.

```
O0001;
      ⋮
      ⋮          Machining program
      ⋮          (machining of a workpiece in spindle 2)
M05; ..... Stopping spindle 2
(G30 P3 V0;) ..... Returning the Y-axis to the 3rd zero point
(G30 P3 U0;) ..... Returning the X-axis to the 3rd zero point
G53 B_ ; ..... Moving spindle 2 to the position where the
                workpiece is dropped into the parts catcher
```

CAUTION

The parts catcher operates disregarding of the turret position.

For the coordinate value of the B-axis, specify the position where the parts catcher can receive the workpiece correctly without causing interference between the moved out parts catcher and the spindle 2, turret head, etc. Note that parts catcher OUT operation is not possible if the B-axis is at a position 40 mm or more in the negative side in the machine coordinate system.

```
M73; ..... Parts catcher OUT
M47; ..... Workpiece ejector OUT/IN
M252; ..... Turning ON in-spindle air blow (spindle 2)
G04 U_ ; ..... Dwell
G28 B0; ..... Moving spindle 2 to the machine zero point
(G28 U0;) ..... Returning the X-axis to the machine zero point
(G28 V0;) ..... Returning the Y-axis to the machine zero point
M74; ..... Parts catcher IN
M257; ..... Turning OFF in-spindle air blow (spindle 2)
M251; ..... Spindle air blow ON (spindle 2)
G04 U_ ; ..... Dwell
M259; ..... Spindle air blow OFF (spindle 2)
      ⋮
M30;
```

NOTE Commands in ( ) can be specified only for the Y-axis specification SL-S series.

17. **M432** Parts Catcher Cycle Function

With the SL-S series machine, it is possible to carry out a machining cycle again in spindle 1 for the workpiece having been machined in spindle 2 after the completion of the cycle indicated below.
Spindle 2 stop → Parts catcher OUT → Workpiece ejection → Parts catcher IN
The program does not advance to the next block while the cycle indicated above is executed.

By using the M 432 command, it is possible to execute the next block of the program simultaneously with the execution of the cycle indicated above.

This allows the workpiece to be machined in spindle 1 immediately after the completion of machining in spindle 2.

M432; . . . . Specifies the parts catcher cycle.

The parts catcher cycle function must be called before the workpiece having been machined in spindle 2 is machined again in spindle 1. To use this function, it must be checked beforehand that the machining cycle executed in spindle 1 does not cause interference with the parts catcher. If the parts catcher cycle function is called without ensuring this, the tool, holder, and/or turret head will interfere with the parts catcher which could cause damage to the machine.

① The M432 command can be used only for the SL-S series machines.

② The chuck clamp and unclamp commands (M210, M211) of spindle 2 cannot be executed during the parts catcher cycle.

③ If the following operations are specified during the parts catcher cycle, they are executed after the completion of the parts catcher cycle.

- B-axis movement command
- Phase synchronization operation command (M34)
- Speed synchronization operation command (M35)
- Arm DOWN command (M71) for the automatic in-machine tool presetter
- Manual door open command (M30)
- Automatic door open command (M85)
- Spindle 2 normal/reverse rotation command (M203/M204)
- Spindle orientation command <spindle 2> (M219)
- Spindle air blow command <spindle 2> (M251)

④ It is not allowed to specify the M432 command if spindle 2 (B-axis) is in a position 40 mm or more in the negative direction in the machine coordinate system.

⑤ If the spindle 2 (B-axis) positioning command is specified with the M432 command in the same block, the M432 command is executed after the completion of positioning of the spindle 2 (B-axis).

Ex. **Programming using M432**

The following is an example program for the machine equipped with the bar feeder.

```
O0001;
    ⋮          Machining program (machining of a workpiece in spindle 2)
(G30 P3 V0;) ..... Returning the Y-axis to the 3rd zero point
(G30 P3 U0;) ..... Returning the X-axis to the 3rd zero point
G53 B_ ; ..... Moving spindle 2 to the position where the
               workpiece is dropped into the parts catcher
```

CAUTION

The parts catcher operates disregarding of the turret position.

For the coordinate value of the B-axis, specify the position where the parts catcher can receive the workpiece correctly without causing interference between the moved out parts catcher and the spindle 2, turret head, etc. Note that parts catcher OUT operation is not possible if the B-axis is at a position 40 mm or more in the negative side in the machine coordinate system.

```
M432; ..... Parts catcher cycle
```

NOTE Spindle 2 stops rotating

```
N10;
M11; ..... Spindle 1 chuck unclamp.
G04 U_ ; ..... Calling for dwell; program execution is suspended
               to allow the chuck of spindle 1 to unclamp
               correctly.
M70; ..... Feeding the bar stock from the bar feeder to the
           machine
M10; ..... Spindle 1 chuck clamp.
G04 U_ ; ..... Calling for dwell; program execution is suspended
               to allow the chuck of spindle 1 to clamp correctly.
G28 B0; ..... Returning the spindle 2 to the machine zero point
(G28 U0;) ..... Returning the X-axis to the machine zero point
(G28 V0;) ..... Returning the Y-axis to the machine zero point
N11;
G50 S2000;
G00 T0101;
G96 S120 M03;
    ⋮          Machining program (machining of a workpiece in spindle 1)
M30;
```

NOTE Commands in ( ) can be specified only for the Y-axis specification SL-S series.

18. **M80** Workpiece Cut-off Detection

The M80 command is used to check if the cut-off cycle, executed after the transfer of the workpiece clamped in the chuck of spindle 1 to the chuck of spindle 2, has been completed.

Completion of cutting off is confirmed by detecting the spindle speeds of spindles 1 and 2. If spindle 2 does not follow spindle 1 when the spindle speed of spindle 1 is changed, cutting off is judged to have completed.

NOTE With the SL-S series machine equipped with the Y-axis, return the Y-axis and then the X-axis to the respective 3rd zero point when moving spindle 2 (B-axis) for transferring a workpiece from spindle 1 to spindle 2. If spindle 2 (B-axis) is moved although both the Y- and X-axes not returned to the 3rd zero point, the machine stops with the corresponding alarm message displayed on the screen.
After returning spindle 2 (B-axis) to the machine zero point on completion of workpiece transfer, return the X- and Y-axes to the respective machine zero point in this order.

COMMAND

M80; . . . . . Detects the completion of cut-off cycle.

NOTE
① The M80 command can be used only for the SL-S series machines.
② If the completion of the cut-off cycle is not detected after the execution of the M80 command, both spindle 1 and spindle 2 stop rotating with the alarm message (EX0035) displayed on the screen.
③ When the M80 command is executed in the synchronized mode operation, the spindle at which the spindle start command (M03, M04, M203, M204) was executed rotates at the specified speed. The other spindle stops rotating.
④ Although the execution of the M80 command cancels the synchronized operation of spindles 1 and 2, the synchronized operation mode is not canceled. Always specify the M36 command after specifying the M80 command.

Ex. **Programming using M80**

```
O0001;
N1;
      ⋮
      ⋮          Machining program
      ⋮          (machining of a workpiece in spindle 1)
      ⋮
N5;
G59; ..... Selecting the G59 work coordinate system
                (for workpiece transfer)
G97 S1000 M03; ..... Starting spindle 1 in the normal direction at
                1000 min–1
M35; ..... Specifying the speed synchronized operation
                mode
M211;
(G30 P3 V0;) ..... Returning the Y-axis to the 3rd zero point
(G30 P3 U0;) ..... Returning the X-axis to the 3rd zero point
G00 B_ ;
      ⋮
      ⋮          Workpiece transfer
      ⋮
G99 G00 X42.0 M08 ; ..... Specifying the feed per revolution mode
G01 X–0.6 F0.08; ..... Cutting to X–0.6 at the feedrate of 0.08 mm/rev
                (cut-off cycle)
G28 U0 M09;
M80; ..... Detecting cutting off
```

NOTE Spindle 1 rotates at 1000 min–1 and spindle 2 stops rotating

```
G28 W0;
M36; ..... Canceling the speed synchronized operation mode
G54; ..... Selecting the G54 work coordinate system
G28 B0; ..... Returning the B-axis (spindle 2) to the machine
                zero point
(G28 U0;) ..... Returning the X-axis to the machine zero point
(G28 V0;) ..... Returning the Y-axis to the machine zero point
M01;
```

NOTE Commands in ( ) can be specified only for the Y-axis specification SL-S series.

19. **M85, M86** Automatic Door Open/Close

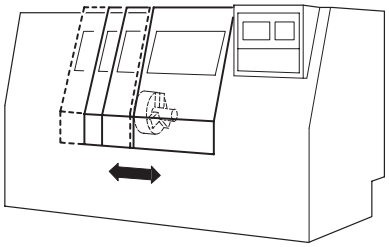

When the M85 command is executed, the automatic door opens.

When the M86 command is executed, the automatic door closes.

NOTE
① The M85 and M86 commands can be used only for the machines equipped with the automatic door.

② The M85 and M86 commands are usually used in combination with the loader, robot system, or other automatic workpiece loading/unloading equipment.

COMMAND

M85; ..... Specifies the automatic door open.

M86; ..... Specifies the automatic door close.

WARNING

For the machines equipped with the robot system, if the door is opened by he execution of the M85 command during automatic operation (including the MDI operation), the operation is continuously executed. Therefore, pay sufficient care so that you will not touch or stand near the rotating or moving parts of the machine. Otherwise, you could sustain injuries or the machine could be damaged due to entangling by the rotating parts, crushed by the moving parts, flying out of the workpiece, and/or splashing of chips and coolant.

CAUTION

When the automatic door is closed by specifying the M86 command, make sure that your fingers, etc., do not get caught in the door and that there are no obstacles that will prevent the door from closing. If your fingers are caught in the door you could be injured.

NOTE
① Before opening the door by the M85 command, always stop the spindle and the rotary tool spindle, turret head, axis movements, and coolant discharge.

② Specify the M86 command to close the automatic door at the start of the program.

Although automatic operation can be executed while the door is open, only the following M codes are executable until the door is closed:

M00, M01, M02, M30, and automatic door open/close M codes (M85, M86)

Other commands such as S codes, T codes, and axis movement commands are not executable until the door is closed.

Ex. **Programming using M85 and M86**

```
O0001;
N1;
M86; ..... Closing the automatic door
G50 S1500;
G00 T0101;
G96 S120 M03;
X75.0 Z20.0 M08;
      ⋮
      ⋮          Machining program
      ⋮
G00 X200.0 Z150.0 M09; ..... After the completion of cutting, the cutting tool
                             moves away from the workpiece.
                             Stopping coolant discharge
M05; ..... Stopping spindle rotation
M85; ..... Opening the automatic door
M30; ..... Ends program execution.
```

The automatic door close command (M86) is specified at the start of the program and the automatic door open command (M85) is specified at the end of a program.

20. **M89** Work Counter, Total Counter

Each time the M89 command written in a program is read, the count data of the work counter increases “1”.

Set the number of times the cycle should be repeated on the PC WORK COUNTER screen (option).

Suppose “100” is set for the work counter. If the M89 command has been executed 100 times as the program is executed repeatedly, the NC will be placed in the cycle start interlocked state or the block delete valid state according to your selection.

NOTE
① The M89 command is optional.

② The work counter is used for tool life management function as well as to control the number of finished workpieces. In comparison to the work counter, the total counter is used for simply counting the number.

COMMAND

M89; . . . . . Specifies counting of work counter and total counter.

How the cycle start interlock state and the block delete valid state differ from each other is explained below.

- Cycle start interlocked state . . . . . When the M89 command has been executed by the preset number of times, cycle start of automatic operation is disabled.
  In other words, the program is not executed even when the ST (ST) switch is pressed.
- Block delete valid state . . . . . The block delete function is invalid until the M89 command is executed by the preset number of times. After the count-up of the counter, the block delete function becomes valid.

  For details of the block delete function, refer to the OPERATION MANUAL separately provided.

NOTE
① Whether the work counter function is used or not is set on the OPERATION PANEL screen.

② Specify the M89 command at the start of the program which is executed repeatedly so that the execution of the program is correctly counted by the work counter.

For details of the work counter function, refer to the OPERATION MANUAL separately provided.

Ex. **Programming using M89 (1)**

The cycle start interlocked state is selected for the count-up state.

"100" is set for the work counter.

O0001;

M89; . . . . . The work counter increases "1" each time program O0001 is executed.

N1;

G50 S1500;

G00 T0101;

⋮

⋮ Machining program

⋮

G00 X200.0 Z150.0 M05;

M30; . . . . . When the cursor has returned to the start of the program after the execution of the program 100 times, the program cannot be started even if the ST (ST) switch is pressed.

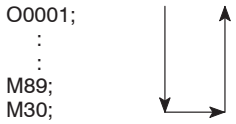

Ex. **Programming using M89 (2)**

The program is executed in the block delete function valid state.

“100” is set for the work counter.

O0001;

M89; . . . . . The work counter increases “1” each time program O0001 is executed.

⋮

⋮ Machining program

⋮

/M99; . . . . . Until the program O0001 is executed 100 times, the block delete function is invalid and the “M99;” block is executed.

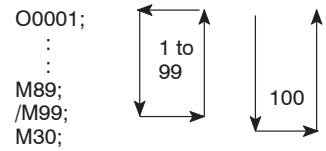

The cursor returns to “O0001”, the start of the program and the program is executed continuously.

For the function of the M99 command, refer to page C–71.

In the execution of the program at the 100th time, the block delete function is made valid and the “M30;” block is executed by skipping the “M99;” block.

M30;

21. **M98, M99** Sub-program Call and Sub-program End

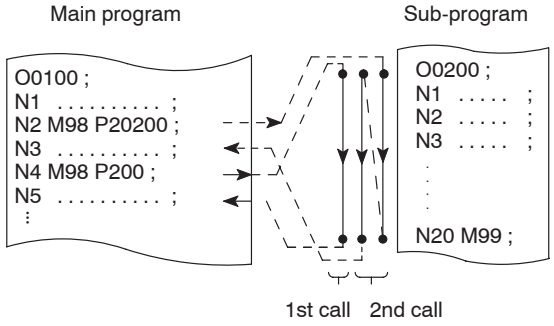

By entering the M98 and M99 commands in respective two programs, these programs are interrelated with each other as a main program and a sub-program as illustrated on the left.

When carrying out machining on the machine equipped with the bar feeder or the loader, for example, the same machining cycle is repeated to machine the workpieces. For such operation, the portion of the program executed repeatedly may be stored to the NC memory as a sub-program and the sub-program program number and the number of times the sub-program should be called are specified in a main program.

NOTE It is possible to specify sub-program call from one sub-program to the other as illustrated below. This is called nesting and allowable nesting level is four. If sub-program call exceeds this limit, alarm number (No. 077) is displayed.

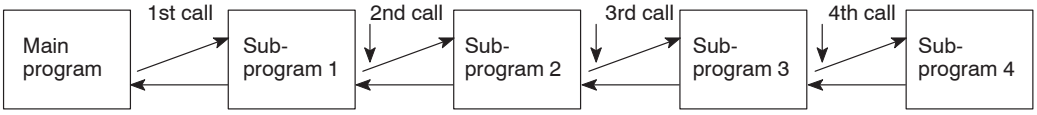

By storing the portion of the program to be executed repeatedly as a sub-program, required memory capacity can be reduced and programming errors can be reduced accordingly.

COMMAND

1. Standard format (setting made before shipping the machine)

M98 P□□□ □□□□ ;

- M98 . . . . . Calls sub-program.
- P□□□ □□□□

  □□□□ — Sub-program number

  □□□ — The number of sub-program calls; if omitted, the specified sub-program is called one time.

2. F15 format

M98 P□□□□ L□□□□ ;

- M98 . . . . . Calls sub-program.
- P . . . . . Specifies sub-program number.
- L . . . . . Specifies the number of sub-program calls.

  If it is omitted, the specified sub-program is called one time.

NOTE

① If the program number specified by address P is not found, an alarm message (No. 078) is displayed on the screen.

② If a P command is not specified in the M98 block, an alarm message (No. 076) is displayed on the screen.

③ For standard format, numeric value specified following address P may not always be in seven digit number. If a sub-program is called only once, address P should be followed only by a sub-program number.

- P1 . . . . . Sub-program number 1
- P1200 . . . . . Sub-program number 1200

If a sub-program is repeated two or more times, the sub-program number should be specified in four digits.

- P2 0200 . . . . . Sub-program number 200 is repeated two times.
- P30 0002 . . . . Sub-program number 2 is repeated 30 times.

The number of program repetition: Max. 999 for standard format and max. 9999 for F15 format

COMMAND

M99 P_ ;

- M99 . . . . . Specifies a return from the sub-program to the immediately previous program.
- P . . . . . Specifies the return sequence number (can be omitted).

NOTE

① If the program number specified by address P is not found, an alarm message (No. 078) is displayed on the screen.

② If address P is specified, the return sequence number is searched, which will take a time. Therefore, this must be taken into consideration when specifying address P.

① If a P command is omitted, the program flow returns to the block that follows the one where jump to the sub-program has been made.

② If “M99 P_ ;” is specified in the main program:

The program flow jumps to the sequence number specified by P in the main program.

If a P command is omitted, the program flow jumps to the start of the main program. The main program is executed endlessly.

Ex. **Programming using M98 and M99 (1)**

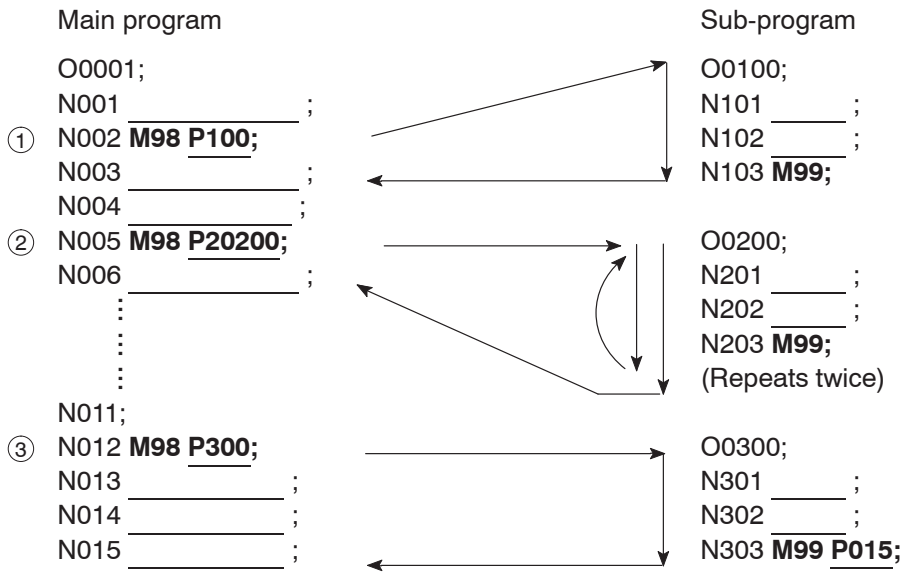

Ex. **Programming using M98 and M99 (2)**

From the sub-program called from the main program, another sub-program is called.

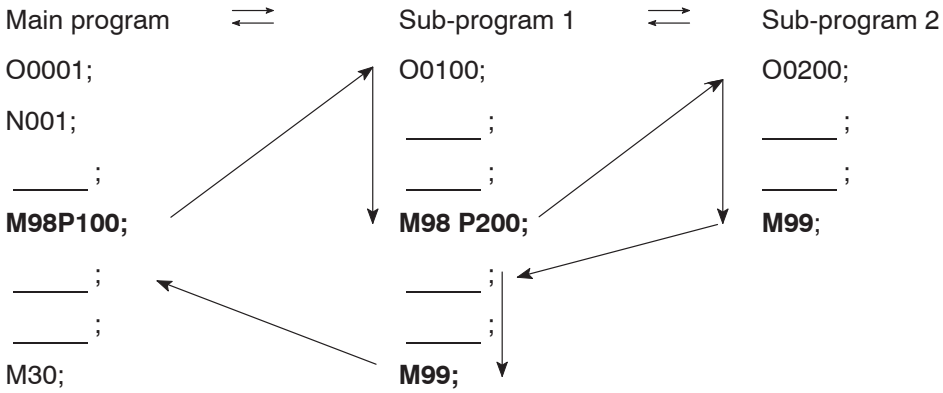

Ex. **Programming using M99**

O0001;
N1;
N2;
⋮
/N7 **M99;** . . . . . When the block delete function is invalid:

The “N7 M99;” command is executed and the program flow returns to the start of the program. The program is repeated endlessly between N1 and N7 blocks.

When the block delete function is valid:

The “N7 M99;” command is ignored and the program is executed continuously to the following blocks.

N8;
M30; . . . . . Ends program.

The M99 command may be used for such as warm up program in which the same program is executed repeatedly.

22. **M90, M290, M91, M291** Simultaneous Spindle/Rotary Tool Spindle Operation Mode ON/OFF

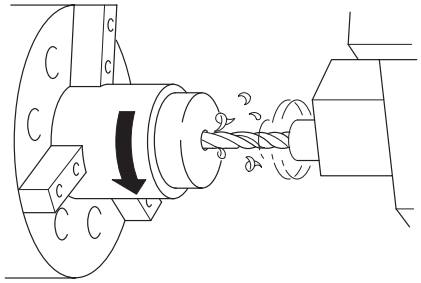

The M90 command is used to rotate the main spindle/spindle 1 and the rotary tool spindle at the same time.

The M290 command is used to rotate spindle 2 and the rotary tool spindle at the same time.

The M91 command is used to cancel the simultaneous operation mode between the spindle/spindle 1 and the rotary tool spindle.

The M291 command is used to cancel the simultaneous operation mode between spindle 2 and the rotary tool spindle.

The M90 and M290 commands are used to rotate the spindle and the rotary tool spindle simultaneously to machine a hole at the center of the spindle (workpiece) at a proper cutting speed if necessary cutting speed cannot be obtained by rotating only the spindle or the rotary tool spindle.

NOTE

① The M90 and M91 commands can be used only for the MC type and the Y-axis specification machines.

② The M290 and M291 commands can be used only for the MC type and the Y-axis specification of the SL-S series.

COMMAND

M90 S_ ;
M91;
M290 S_ ;
M291;

- M90 . . . . . Turns the simultaneous spindle/rotary tool spindle operation mode ON.
  Turns the simultaneous spindle 1/rotary tool spindle operation mode ON.
- M290 . . . . . Turns the simultaneous spindle 2/rotary tool spindle operation mode ON.
- S . . . . . Specifies the rotary tool spindle speed (min^{-1}).
- M91 . . . . . Turns the simultaneous spindle/rotary tool spindle operation mode OFF.
  Turns the simultaneous spindle 1/rotary tool spindle operation mode OFF.
- M291 . . . . . Turns the simultaneous spindle 2/rotary tool spindle operation mode OFF.

NOTE

① When determining a feedrate of the rotary tool, the sum of the spindle speed and the rotary tool spindle speed must be used as the revolutionary speed of the rotary tool.

② The block where the M90 or M290 command is specified must always contain the rotary tool spindle speed command. Unless the rotary tool spindle speed is specified in such a block, the rotary tool spindle rotates at the spindle speed specified in a previous block.

③ Stop the spindle and the rotary tool spindle by specifying the M05 command before specifying the M91 or M291 command. If the M91 or M291 command is specified in the state the spindle and the rotary tool spindle are not stopped, the machine stops with an alarm message (EX1424) displayed on the screen.

Ex. **Programming using M90 and M91**

The program for executing hole machining operation (10 mm deep) at the center of the workpiece (spindle) at the spindle speed of 2000 min^{-1} and the rotary tool spindle speed of 3000 min^{-1}.

```
O0001;
N1;
G00 T0101;
M90 S3000; ..... Turning the simultaneous spindle (spindle 1)/
                 rotary tool spindle operation mode ON
                 Setting the rotary tool spindle speed at 3000 min-1
G97 S2000 M03; ..... Starting the spindle or spindle 1 in the normal
                     direction at 2000 min-1
                     Starting the rotary tool spindle in the normal
                     direction at 3000 min-1
X0 Z30.0 M08; ..... Positioning of the tool to the center of the
                    workpiece (spindle) at a rapid traverse rate
Z3.0;
G98 G01 Z–10.0 F500; ..... Specifying the feed per minute mode
                           Machining a hole (10 mm deep) at the feedrate of
                           500 mm/min
```

NOTE Determine the feedrate of the tool assuming the spindle speed of 5000 min^{-1}, which is the sum of 2000 min^{-1} (spindle speed) and 3000 min^{-1} (rotary tool spindle).

```
G00 Z10.0 M09;
G99 X200.0 Z150.0 M05; ..... Stopping the spindle or spindle 1 and the rotary
                             tool spindle
                             Specifying the feed per revolution mode
M91; ..... Turning the simultaneous spindle (spindle 1)/rotary
           tool spindle operation mode OFF
M01;
```

23. **M320, M321** Y-axis Lock/Unlock

The Y-axis is locked when the M320 command is executed.

The Y-axis is unlocked when the M321 command is executed.

The M320 and M321 commands are specified to lock and unlock the Y-axis.

NOTE The M320 and M321 commands can be used only for the TL series equipped with Y-axis specification.

COMMAND

M320; . . . . Locks the Y-axis.

M321; . . . . Unlocks the Y-axis.

NOTE

① Specify the M320 and M321 commands in a block independently without other commands.

② While the spindle or rotary tool spindle is rotating, M320 or M321 command must not be specified.

Before specifying the M320 or M321 command, specify the M05 command to stop the spindle or rotary tool spindle.

③ Before specifying the M320 or M321 command, return the X- and Z-axes to the machine zero point or second zero point. Y-axis lock/unlock operation is not executed if the X- or Z-axis is not at the zero point or second zero point.

④ The Y-axis lock command (M320) may be specified only while the Y-axis is in the unlocked state. Or, the Y-axis unlock command (M321) may be specified only while the Y-axis is in the locked state. If it is necessary to specify these M commands while the Y-axis is not completely locked or unlocked, lock or unlock the Y-axis manually before specifying them.

⑤ If the M320 or M321 command is specified in the machine lock state, Y-axis lock/unlock operation is not executed.

⑥ When the M320 command is executed, the Y-axis is first returned to the second zero point and then locked there.

⑦ To carry out normal turning operation or milling operation which does not require Y-axis movement, the Y-axis must be kept locked by executing the M320 command.

Ex. **Programming using M320 and M321**

```
O0001;
N1;
G50 S2000;
G00 T0202;
G96 S200 M03;
      ⋮
      ⋮          Machining program (turning operation)
      ⋮
M05; ..... Stopping the spindle rotation
M01;
N2;
G98; ..... Specifying the feed per minute mode
M45; ..... Connecting the spindle as the C-axis
G28 U0 W0; ..... Returning the X- and Z-axes to the machine zero
                 point
M321; ..... Unlocking the Y-axis
G00 T0303;
G97 S500 M13; ..... Starting the rotary tool spindle in the normal
                    direction at 500 min-1
      ⋮
      ⋮          Machining program (milling operation using the Y-axis)
      ⋮
G28 U0 W0; ..... Returning the X- and Z-axes to the machine zero
                 point
M05; ..... Stopping the rotary tool spindle rotation
M320; ..... Locking the Y-axis
M01;
      ⋮
```

24. **M40 - M44** Selecting Spindle Speed Range

For the machine equipped with a transmission, the gear range must be changed according to the required spindle speed by specifying the M40 to M44 commands.

NOTE The M40 to M44 commands may be used only for the machine equipped with a transmission.

The number of spindle speed ranges available on each model is indicated below.

Models	M Codes Used to Select a Gear Range
SL-400B, 400C, 400BMC, 400CMC LL-7B	M40, M41, M42
SL-600, 600MC VL-55, 55MC	M40, M41, M42, M43
LL-8B	M40, M41, M42, M43, M44

COMMAND

M40; . . . . . Spindle drive gear in neutral

Selects neutral gear range.

M41; . . . . . Spindle drive gear, 1st gear range

Selects 1st gear range.

M42; . . . . . Spindle drive gear, 2nd gear range

Selects 2nd gear range.

M43; . . . . . Spindle drive gear, 3rd gear range

Selects 3rd gear range.

M44; . . . . . Spindle drive gear, 4th gear range

Selects 4th gear range.

Low

Spindle speed increases

High

WARNING

Do not change the spindle gear range while a cutting load is applied. In such a state, if the spindle gear range is changed, the workpiece could fly out of the chuck, causing serious injuries or damage to the machine, and the cutting tool could be damaged. In addition, excessive loads will be applied to the machine motors and machine elements, shortening their service lives.

CAUTION

In each gear range, the spindle is allowed to rotate up to the speed 80% the maximum speed. This restriction is applied due to the limit of the maximum work of the clutch. Therefore, when specifying the gear range change M code, take this restriction into consideration.

NOTE

① When the M02 or M03 command is executed, the present range is canceled.

② When the spindle is in the neutral state, it is interlocked and spindle start operation is not allowed.

For the allowable maximum speed in each of the ranges, refer to the “SPINDLE SPEED OUTPUT DIAGRAM” given in the DRAWINGS (PARTS LIST I) supplied separately.

Ex. **Programming using M40 to M44**

```
O0001;
N1;
G50 S1500; ..... Setting the spindle speed limit for automatic
                 operation at 1500 min−1
G00 T0101 M41; ..... Selecting the low speed range (1st range) by M41
```

NOTE If the upper limit speed available in the selected range is lower than the spindle speed limit specified by the G50 command, the spindle speed is clamped at the upper limit speed of the selected range.

```
G96 S120 M03;
X75.0 Z20.0 M08;
    ⋮
    ⋮          Machining program
    ⋮
M01;
N2;
G50 S1500;
G00 T0202 M42; ..... Selecting the high speed range (2nd range) by
                     M42
G96 S120 M03;
X33.0 Z20.0 M08;
    ⋮
    ⋮          Machining program
    ⋮
```

NOTE The spindle speed range selection M code (M41 to M44) must be specified at the beginning of each part program. This is to avoid the spindle to start in a wrong range for the required spindle speed.

25. **M28, M29** In-position Check Valid and In-position Check Invalid

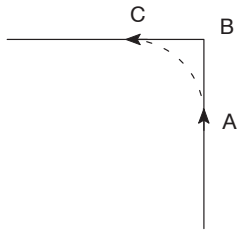

Tool path programmed in the G01 mode
Actual tool path

If the M28 command is specified, axis movement specified in the same block is decelerated before stopped at the end point. The G09 command calls the function which checks whether the cutting tool has been positioned exactly as specified.

If cutting tool movement of A → B, B → C is specified in the M28 mode, the corner may be slightly rounded as indicated by broken lines. To finish the corner sharp, the M28 command is used.

In the G01 mode, when axis movement is decelerated before stopping at the programmed end point, it is also accelerated automatically to start the axis movement command specified in the next block.

NOTE The M28 mode is valid for cutting feed (G01, G02, G03).

It is used to make the corner of the workpiece sharp in the G01 cutting feed mode, for example.

COMMAND

M28; . . . . . In-position check valid

M29; . . . . . In-position check invalid

Ex. **Programming using G09**

Using the G09 command for movement in ④ → ⑤ → ⑥ → ⑦ → ⑧ in the following illustration.

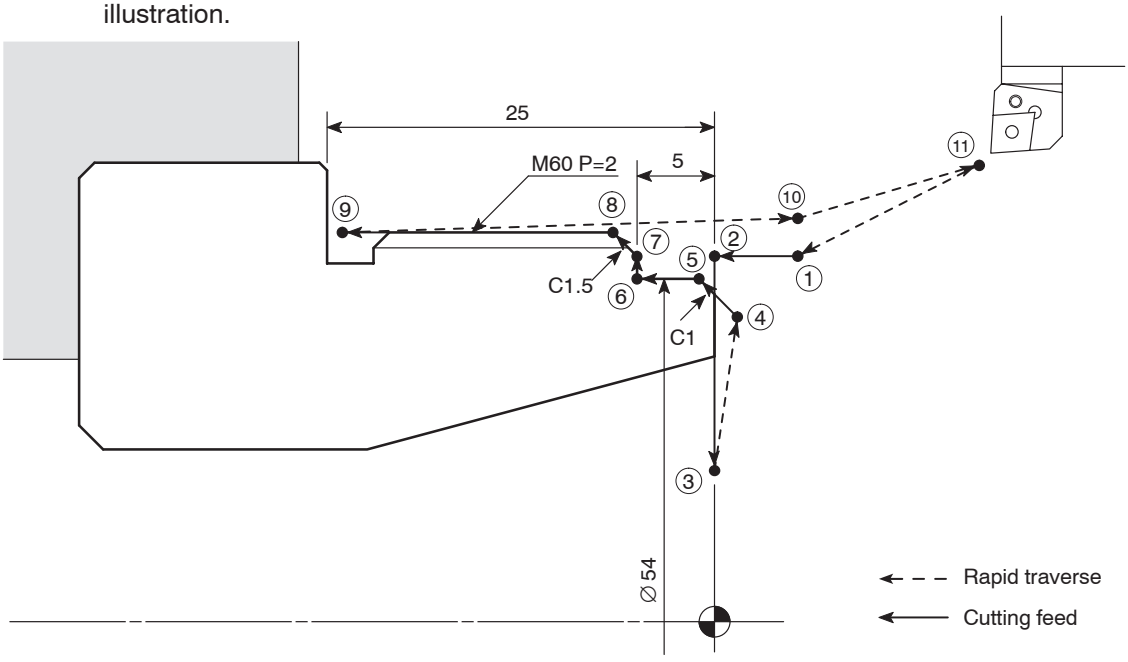

```
O0001;
N1;
G50 S2000;
G00 T0101;
G96 S200 M03;
X56.0 Z20.0 M08; ..... Positioning at ① at a rapid traverse rate to move
                       the cutting tool close to the workpiece
G01 Z0 F1.0; ..... Positioning at ② at a cutting feedrate.
X30.0 F0.15;
G00 X50.0 W1.0; ..... Positioning from ③ to ④ at a rapid traverse rate.
M28; ..... In-position check valid
G01 X54.0 Z–1.0;
                  ..... Moving the cutting tool to point ④ → ⑤ → ⑥ →
                        ⑦ → ⑧ at a feedrate of 0.15 mm/rev
Z–5.0;            The exact positioning at the each end point ⑤ →
X56.8;            ⑥ → ⑦ → ⑧ of movement is checked by the NC.
X59.8 Z–6.5;      Before starting the movement commands in the
                  next block, the feed stops at the each end point of
                  movement ⑤ → ⑥ → ⑦ → ⑧ once.
M29; ..... In-position check invalid
Z–23.0 F0.2; ..... Moving the cutting tool to point ⑧ → ⑨ at a
                   feedrate of 0.2 mm/rev
                   Without deceleration at point ⑨, the cutting tool
                   starts executing the command in the next block.
G00 U1.0 Z20.0; ..... Positioning at ⑩ at a rapid traverse rate to move
                      the cutting tool away from the workpiece
X200.0 Z150.0 M09; ..... Positioning at ⑪ where the turret head can be
                         rotated
M01;
```

26. **M39** Rotary Tool Joint Check

The M39 command is used to check whether the rotary tool and the clutch are joined. If they have not joined, they are joined by specifying the M39 command.

Normally the rotary tool and the clutch are joined after tool is indexed by M13 (Rotary tool spindle start <normal>), M14 (Rotary tool spindle start <reverse>) and the T command (which is used to select the specified tool).

Specify the M39 command to join the rotary tool and the clutch when the rotary tool is rotating without specifying rotating command as well as polygon cutting and synchronized tapping.

NOTE The M39 command can be used only for the MC type of the SL-400, 600 and VL-55.

M39; . . . . . Rotary tool joint check.

NOTE ① The rotary tool must be registered correctly before specifying M39 command. If tool registration is incorrect, the rotary tool spindle does not rotate.

② M39 command cannot be specified during the rotary tool rotating.

For rotary tool registration procedure, refer to the OPERATION MANUAL separately provided.

27. Summary

In this section, the program is written for the sample workpiece illustrated below to review the M functions having been explained.

NOTE The sample workpiece is used only for the purpose of explanation and the program is written only for the finishing shape and assuming that tool nose radius of “0”.

<Drawing>

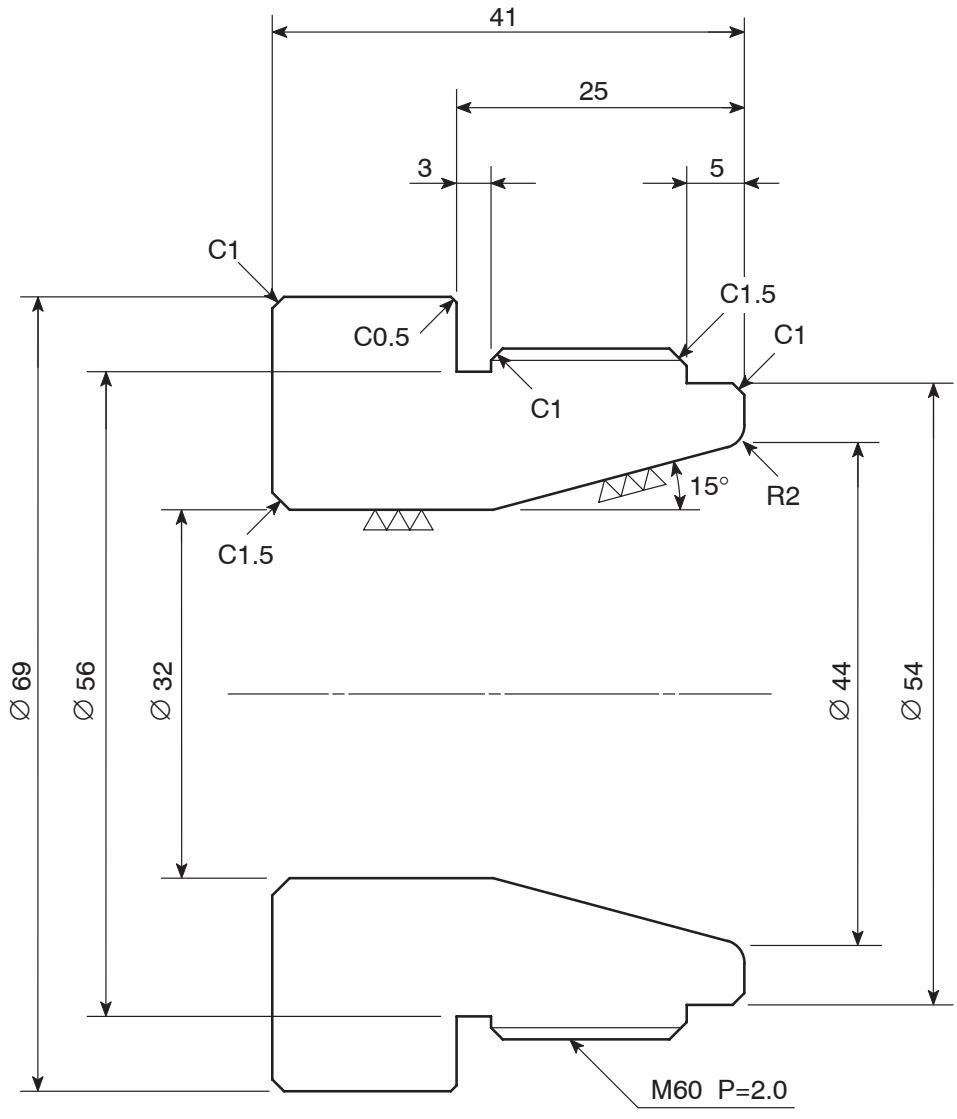

Finishing is ▽▽ unless otherwise specified.

<Dimensions of blank workpiece>

Blank Workpiece		Description
Material		AISI 1045 (Carbon steel)
Dimensions (mm)	O.D.	70
	I.D.	30
	Length	43

<Part programs>

Tool paths for finish facing, O.D. finishing, and I.D. finishing

Tool paths for O.D. grooving and O.D. thread cutting

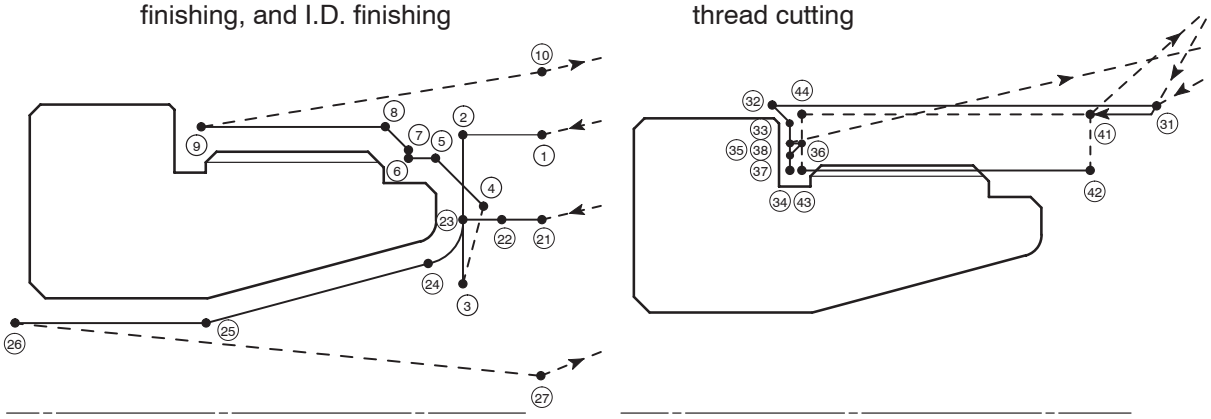

Rapid traverse

Cutting feed

N3(FIN. OF. OUT.); . . . . . Part program for finish facing and O.D. finishing

G50 S2000; . . . . . Setting the spindle or spindle 1 speed limit for automatic operation at 2000 min^{-1}

G00 T0303 (M42)*; . . . . . Selecting the No. 3 tool
M42 selects high-speed range (2nd range).

NOTE If the upper limit speed in the M42 range is lower than the maximum speed specified in the G50 block, the spindle speed is clamped at the upper limit speed in the M42 range.

G96 S200 M03; . . . . . Starting the spindle or spindle 1 in the normal direction at the cutting speed of 200 m/min

① X56.0 Z20.0 M08; . . . . . Approaching cutting tool to the workpiece at a rapid traverse rate
Starting coolant discharge

② G01 Z0 F1.0;

③ X30.0 F0.15; . . . . . Cutting at the feedrate of 0.15 mm/rev

④ G00 X50.0 W1.0;

⑤ G01 X54.0 Z–1.0;

⑥ Z–5.0;

⑦ X56.8;

⑧ X59.8 Z–6.5;

⑨ Z–23.0 F0.2;

⑩ G00 U1.0 Z20.0;

X200.0 Z150.0; . . . . . Retracting cutting tool from the workpiece at a rapid traverse rate

M01; . . . . . If optional stop is valid:
The machine stops temporarily.
If optional stop is invalid:
The machine does not stop and the program is continuously executed.

N4(FIN. OF. IN.); . . . . . Part program for I.D. finishing
G50 S2000; . . . . . Setting the spindle speed limit for automatic operation at 2000 min^{-1}
G00 T0404 (M42)*; . . . . . Selecting the No. 4 tool
M42 selects high-speed range (2nd range).
G96 S200 M03; . . . . . Starting the spindle or spindle 1 in the normal direction at the cutting speed of 200 m/min
㉑ X47.069 Z20.0 M08; . . . . . Approaching cutting tool to the workpiece at a rapid traverse rate
Starting coolant discharge
㉒ G01 Z1.0 F1.0;
㉓ Z0 F0.15; . . . . . Cutting at the feedrate of 0.15 mm/rev
㉔ G02 X43.205 Z–1.482 R2.0 F0.07; . . . Cutting along an arc on R2 portion at the feedrate of 0.07 mm/rev in the clockwise direction
㉕ G01 X32.0 Z–22.392;
㉖ Z–41.0 F0.1;
㉗ G00 U–1.0 Z20.0; . . . . . Escape of cutting tool from the workpiece to execute I.D. cutting in the next process
X200.0 Z150.0; . . . . . Retracting cutting tool from the workpiece at a rapid traverse rate
M01; . . . . . If optional stop is valid:
The machine stops temporarily.
If optional stop is invalid:
The machine does not stop and the program is continuously executed.

N5(GROV.); . . . . . Part program for O.D. grooving
G50 S1500; . . . . . Setting the spindle speed limit for automatic operation at 1500 min^{-1}
G00 T0505 (M41)*; . . . . . Selecting the No. 5 tool
M41 selects low-speed range (1st range).
G96 S100 M03; . . . . . Starting the spindle or spindle 1 in the normal direction at the cutting speed of 100 m/min.
㉛ X70.0 Z20.0 M08; . . . . . Approaching cutting tool to the workpiece at a rapid traverse rate
Starting coolant discharge
㉜ G01 Z–26.0 F1.0;
㉝ X68.0 Z–25.0 F0.07; . . . . . Cutting at the feedrate of 0.07 mm/rev

㉞ X56.0 F0.1;
G04 U0.2; . . . . . Dwell for 0.2 seconds
(Program execution is suspended while the spindle keeps rotating)

㉟ G00 X60.8;

㊱ Z–23.6;

㊲ G01 X58.0 Z–25.0;

㊳ G00 X60.8;
X200.0 Z150.0; . . . . . Retracting cutting tool from the workpiece at a rapid traverse rate
M01; . . . . . If optional stop is valid:
The machine stops temporarily.
If optional stop is invalid:
The machine does not stop and the program is continuously executed.

N6(THREAD.); . . . . . Part program for O.D. thread cutting
G50 S1500;
G00 T0606 (M41)*; . . . . . Selecting the No. 6 tool
M41 selects low-speed range (1st range).
G97 S640 M03; . . . . . Starting the spindle or spindle 1 in the normal direction at 640 min^{-1}
X70.0 Z20.0 M08; . . . . . Starting coolant discharge
㊶ G01 Z5.0 F1.0 M24; . . . . . Positioning of the cutting tool at the start point for thread cutting at a rapid traverse rate
Chamfering OFF
㊷,㊸,㊹,㊶G92 X59.1 Z–24.0 F2.0; . . . . . Execution of thread cutting cycle in the G92 mode
A series of thread cutting operation of
㊶→㊷→㊸→㊹→㊶ is executed repeatedly.
X58.6;
X58.2;
X57.9;
X57.7;
X57.54;
X57.44;
X57.4;
G00 X200.0 Z150.0 M09; . . . . . Retracting cutting tool from the workpiece at a rapid traverse rate
Stopping coolant discharge
M05; . . . . . Stopping the spindle
M30; . . . . . End of program and program rewind

NOTE Commands in ( ) identified by "*" are used only for the machine equipped with a transmission.

APPENDIX 1 Multiple M Code Function

The multiple M code function allows entry of a maximum of three M codes in a block.

By using the multiple M code function for the robot or the loader specification, cycle time can be reduced.

The multiple M code function can use the M codes indicated below as multiple M code function M codes.

<Multiple M code>

- M10 . . . . . Chuck clamp/Chuck clamp <spindle 1>
- M11 . . . . . Chuck unclamp/Chuck unclamp <spindle 1>
- M210 . . . . . Chuck clamp <spindle 2>
- M211 . . . . . Chuck unclamp <spindle 2>
- M19 . . . . . Spindle orientation/Spindle orientation <spindle 1>
- M219 . . . . . Spindle orientation <spindle 2>
- M25 . . . . . Tailstock spindle OUT
- M26 . . . . . Tailstock spindle IN
- M85 . . . . . Automatic door open
- M86 . . . . . Automatic door close
- M37 . . . . . Ceiling shutter open
- M38 . . . . . Ceiling shutter close

CAUTION

The multiple M code function simultaneously executes up to three M codes specified in the same block. Therefore, operations called out by these M codes and the combination of them must be carefully examined. If M codes are specified in improper combinations, it may cause damage to the machine.

NOTE

① Although the first M code among the two or three M codes specified in a block may be other than the M code allowed to be used by the multiple M code function, the second and the third M code must be the multiple M code function M codes.

② A spindle (or rotary tool spindle) rotation M code (M03, M04, M13, M14) must not be specified with a multiple M code function M code in the same block.

③ The multiple M code function can be used only for MSC-500, MSC-501, MSG-501, MSD-501, and MSD-501II.

CHAPTER D
T, S, AND F FUNCTIONS

This chapter describes the T function, that rotates the turret to index the required tool and calls the tool offset number, the S function, that specifies the spindle speed or the rotary tool spindle speed, and the F function, that specifies the feedrate.

The examples of program given in this chapter all assume tool nose R0.

CONTENTS

D : T, S, AND F FUNCTIONS

1. T Function D–1
   - 1.1 Tool Numbers D–3
   - 1.2 Tool Geometry Offset D–4
   - 1.3 Tool Wear Offset D–6

2. S Function D–13
   - 2.1 Specifying the Spindle Speed (G97 S_) D–13
   - 2.2 Specifying the Cutting Speed (G96 S_) D–15
   - 2.3 Specifying the Spindle Speed Limit for Automatic Operation (G50 S_) D–16
   - 2.4 Relationship of the Cutting Speed, Diameter, and Spindle Speed D–18
   - 2.5 Workpiece Materials and Cutting Speeds D–19

3. F Function D–20
   - 3.1 Feed per Spindle Revolution (G99 F_) D–20
   - 3.2 Feed per Minute (G98 F_) D–23
   - 3.3 Feedrate for Finishing D–24
   - 3.4 Table of Rapid Traverse Rates D–25
   - 3.5 Table of Maximum Cutting Feedrate D–26

1. T Function

The T function is used to select the specified tool and to set the coordinate system using the tool offset.

It also reads the data necessary to execute the automatic tool nose radius offset function.

For the automatic tool nose radius offset function, refer to Chapter E “AUTOMATIC TOOL NOSE RADIUS OFFSET”.

A four-digit number entered following address T specifies a tool number and an tool offset number.

T□□□□;

- T□□□□; . . <SL, VL, TL, LL and CL series>
  The first two digits of a T number specify the tool number and the tool geometry offset number.

  <SL-S series>
  The first two digits of a T number specify the tool number.
- T□□□□; . . <SL, VL, TL, LL and CL series>
  The last two digits of a T number specify the tool wear offset number.

  <SL-S series>
  The last two digits of a T number specify the tool geometry offset number and the tool wear offset number.

The tool number, tool geometry offset number, and the tool wear offset number are explained in detail on the following pages.

Ex. **Using T function**

O0001;
N1;
G50 S2000;
G00 T0101; ..... <SL, VL, TL, LL and CL series>

T0101 ..... Calls the No. 1 tool.
The offset data entered in field No. 1 of the OFFSET/GEOMETRY screen is used.

T0101 ..... The offset data entered in field No. 1 of the OFFSET/WEAR screen is used.

<SL-S series>

T0101 ..... Calls the No. 1 tool.

T0101 ..... The offset data entered in field No. 1 of the OFFSET/GEOMETRY and OFFSET/WEAR screen are used.

G96 S200 M03;
X100.0 Z20.0 M08;
⋮ Machining program
M01;

CAUTION

With the SL-400, SL-600 and CL series machines, a T code must be associated with an axis movement command in the G00 mode in the same block to move the axis away from the workpiece. If a T code is specified carelessly, it may cause interference between the cutting tool, the tool holder, or the turret head and the workpiece, the chuck, the fixture, or the tailstock (tailstock specification), resulting in damage to the machine.

NOTE

① With the SL-S series machines, different tools will be used between spindles 1 and 2 even if the same tool number is specified. Therefore, it is not possible to use the same number for the tool number and offset number (geometry, wear).

T01 01 ..... Spindle 1

T01 17 ..... Spindle 2

② With the SL-S series machines, always set the tool geometry offset data and the tool wear offset data to the same offset number.

With the SL, VL, TL, LL and CL series machines, it is recommended to use the same number for the tool number and tool wear offset number when specifying a T command in a program to avoid operator's errors.

T01 01, T02 02, etc.

For the procedure used for calculating and inputting the tool wear offset data and tool geometry offset data, refer to the OPERATION MANUAL separately provided.

1.1 Tool Numbers

A tool number indicates a particular station number in the turret head.

By reading a tool number specified in a T code, the NC rotates the turret head accordingly to bring the corresponding station into the cutting position.

A 12-station turret, for example, has 12 station numbers from “1” to “12”.

NOTE With the LL-7 and 8, No. 1 to No. 4 tools are mounted in the front-side turret and No. 5 to No. 8 tools in the rear-side turret. If a 6-station turret is used for the rear-side turret of the LL-7, tools No. 5 to No. 10 are mounted in the rear-side turret.

Ex. **Specifying the tool numbers**

```
O0001;
N1;
G50 S2000;
G00 T0101; ..... Selecting the No. 1 tool.
G96 S120 M03;
      ⋮
      ⋮          Machining program
      ⋮
M01;
N2;
G50 S2500;
G00 T0202; ..... Selecting the No. 2 tool.
G96 S200 M03;
      ⋮
      ⋮          Machining program
      ⋮
M30;
```

1.2 Tool Geometry Offset

The data which describes the distance between workpiece zero point (X0, Z0) and the tool nose of the cutting tool positioned at the machine zero point, is called the tool geometry offset data.

The workpiece zero point is determined and the coordinate system (X-Z) set when the NC reads the tool geometry offset data.

NOTE The tool geometry offset data in the X-axis should be set in diameters.

EX. **Specifying the tool geometry offset**

An O.D. cutting tool is mounted in station No. 1 and an I.D. cutting tool in station No. 2, as shown in the illustration.

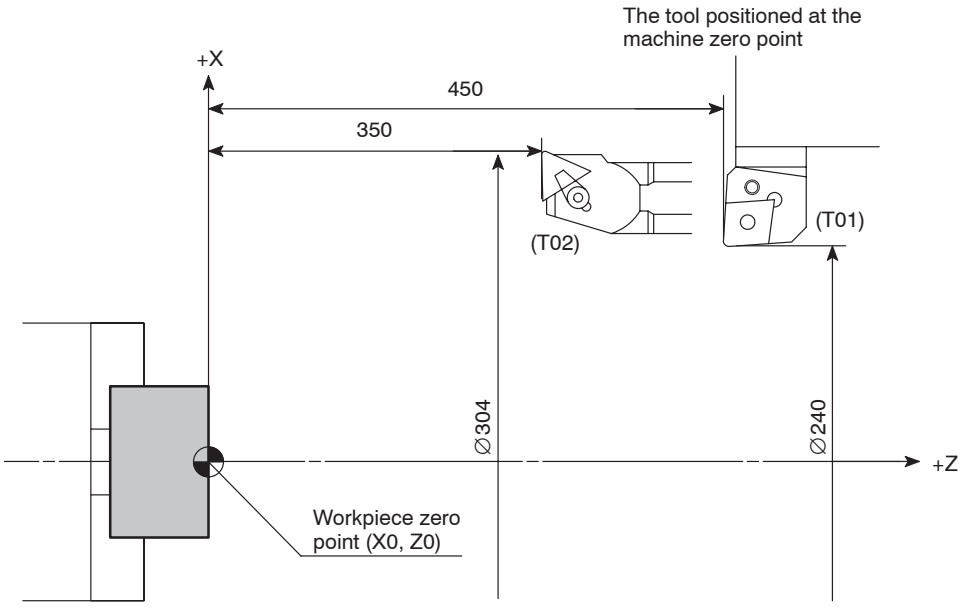

Tool	Tool No.	Tool Geometry Offset No.	Tool Geometry Offset Data	
O.D. cutting tool	T01	Tool No. 1	X	240 mm
			Z	450 mm
I.D. cutting tool	T02	Tool No. 2	X	304 mm
			Z	350 mm

NOTE Input the tool geometry offset data as a negative value.

```
O0001;
N1; (O.D.)
G50 S2000;
G00 T0101; ..... With the "T0101" command, the workpiece zero
                 point is set at the position which is away from the
                 programmed point (tool nose) of tool No. 1,
                 positioned at the machine zero point, by the tool
                 geometry offset data of tool No. 1 in the
                 OFFSET/GEOMETRY screen.
G96 S120 M03;
    ⋮          Machining program
M01;

N2; (I.D.)
G50 S2500;
G00 T0202; ..... With the "T0202" command, the workpiece zero
                 point is set at the position which is away from the
                 programmed point (tool nose) of tool No. 2,
                 positioned at the machine zero point, by the tool
                 geometry offset data of tool No. 2 in the
                 OFFSET/GEOMETRY screen.
G96 S200 M03;
    ⋮          Machining program
M30;
```

NOTE It is not necessary to cancel the tool geometry offset data for each cutting tool; the offset data is automatically canceled when the tool geometry offset command (T command) is read for the next tool.

WARNING

When the coordinate system is set using G50, the start and end points of the part program must be the same point.

At the end of a part program, the tool wear offset data of the cutting tool used to set the coordinate system must be canceled.

If you do not cancel the tool wear offset data, the X and Y coordinate values will be shifted by the tool wear offset data each time the program is executed. This will shift the start (end) point of the program, which could lead to interference between the cutting tool, holder or turret head and the workpiece, chuck, fixture, or tailstock (if featured), causing accidents involving serious injuries or damage to the machine.

```
N1;
G50 X240.0 Z450.0;
G00 T0101; ..... Selecting the No. 1 tool
    ⋮          Machining program
G00 X240.0 Z450.0; ..... The end point of a part program must be the
                         same point as the start point of the next part
                         program.
T0100; ..... Canceling the tool wear offset data
M01;
```

CAUTION

When the coordinate system is set using G50, do not input the tool geometry offset data. If you input this data, the workpiece zero point will be shifted by the amount of the tool geometry offset data, which could lead to interference between the cutting tool, holder or turret head and the workpiece, chuck, fixture, or tailstock (if featured), damaging the machine.

1.3 Tool Wear Offset

If the tool position is offset using the tool geometry offset data, it is simply the static offsetting. In actual cutting, dynamic offsetting is also necessary to compensate for deflection of cutting tool and elastic deformation in mechanical system generated by the cutting force. In addition, compensation for initial wear and wear during production of the cutting tools must also be made. The tool wear offset function is used for dynamic offsetting to finish the workpiece within the specified tolerance.

NOTE The tool wear offset data in the X-axis should be set in diameters.

Ex. **Specifying the tool wear offset (1)**

NOTE The illustration below shows the tool paths, before and after offset for tool wear.

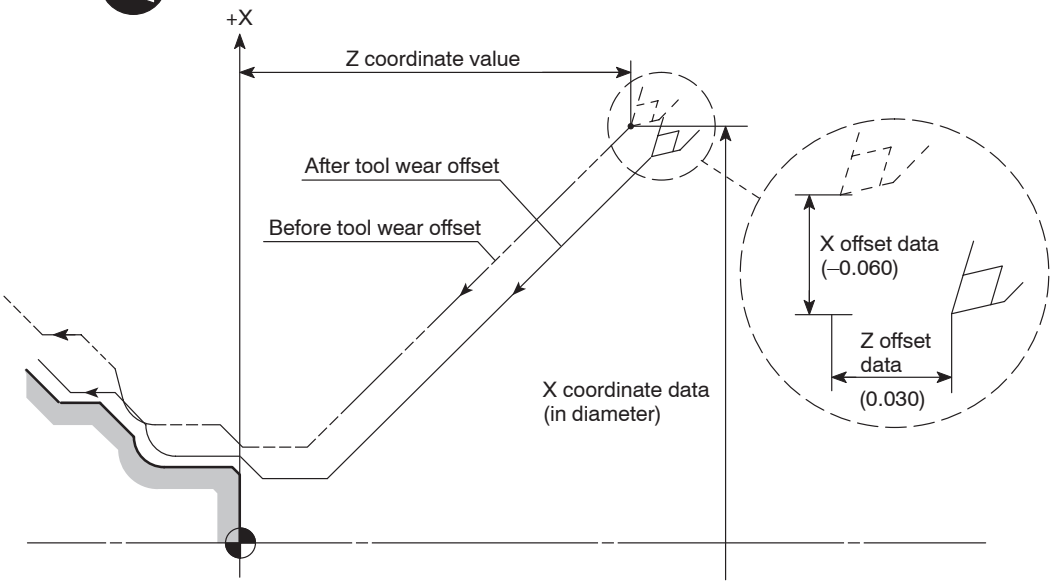

Tool	Tool No.	Tool Wear Offset No.	Tool Wear Offset Data	
O.D. cutting	T01	Tool No. 1	X	–0.06 mm
			Z	0.03 mm

```
O0001;
N1; (O.D.)
G50 S2500;
G00 T0101; ..... With "T0101" command, the tool position is offset
                 by the offset data of tool No. 1 in the
                 OFFSET/WEAR screen.
G96 S120 M03;
    ⋮
    ⋮          Machining program
    ⋮
M01;
N2; (I.D.)
G50 S2000;
G00 T0202; ..... With "T0202" command, the tool position is offset
                 by the offset data of tool No. 2 in the
                 OFFSET/WEAR screen.
G96 S200 M03;
    ⋮
    ⋮          Machining program
    ⋮
M30;
```

The same procedure is used for other tools. In a program, only the tool wear offset number is specified in a T command. The actual offset data to be input must be found by the operator.

① It is not necessary to cancel the tool wear offset data for each cutting tool; the offset data is automatically canceled when the tool wear offset command (T command) is read for the next tool.

② The tool position is shifted by the amount set on the OFFSET/WEAR screen when a T command is executed.

③ With TL-40Y, to shift the Y-axis by the Y-axis offset amount set on the OFFSET/WEAR screen by executing a T command, it is necessary to execute M321 to unclamp the Y-axis before executing a T command since the Y-axis clamp mechanism is used on this model. Accordingly, if a T command is executed in the state the Y-axis clamped with M320 executed, the Y-axis cannot shift by the set offset amount. In this case, the machine stops when a T command is read.

Ex. **Specifying the tool wear offset (2)**
(Adjusting dimensions at two or more places)

By assigning more than one tool wear offset number for a single tool, it is possible to adjust the tool paths by different amounts to offset the cutting at two or more places.

When cutting a workpiece with multiple steps, as illustrated below, and if the tolerance at each diameter is strict, it is difficult to finish the workpiece to the required accuracy if the tool position is offset uniformly at each diameter. In this case, it is necessary to use different offset data for each diameter. After cutting the first workpiece, measure the diameters and adjust the offset data as measured for each diameter to finish the workpiece within the specified tolerance.

NOTE This feature cannot be used by the SL-S series machines.

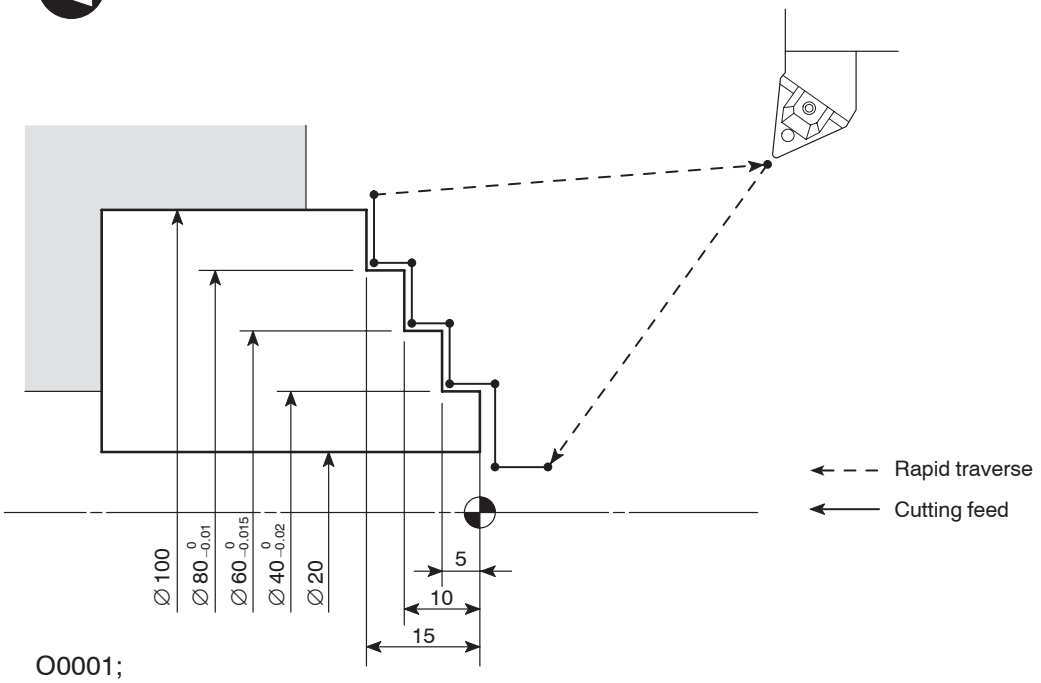


```
O0001;
N1;
G50 S3000;
G00 T0101; ..... ①
G96 S180 M03;
X16.0 Z20.0 M08;
G01 Z0 F1.0;
X39.99 F0.2;
Z–5.0 F0.1;
X59.99 F0.2;
Z–10.0 F0.1;
X80.0 T0111 F0.2; ..... ②
Z–15.0 F0.1;
X104.0 F0.2;
G00 X150.0 Z100.0 M09;
M01;
```

Using the tool specified in block ①, 40 mm and 60 mm diameter portions are machined using the offset data of tool wear offset number 1.

Using the tool specified in block ②, 80 mm diameter portion is machined using the offset data of tool wear offset number 11. This is summarized in the table below.

Offset Direction	Tool Wear Offset Data	
	01	11
X	0.235 mm	0.250 mm
Z	0.150 mm	0.150 mm

First, set the same tool offset data to the tool wear offset Nos. 01 and 11. After cutting a workpiece, measure the dimensions and adjust the tool wear offset data so that the dimensions can be finished within the specified tolerance.

NOTE
① For first cutting, set the same tool wear offset data for the tool wear offset Nos. 01 and 11.

② For the offset data in the Z-axis of the two tool wear offset number, always set the same offset data.

Ex. **Specifying the tool wear offset (3) (Adjusting a taper angle)**

The tool wear offset data may be used in a special method. Check the cut taper with a gage. It is possible to adjust the finished taper using the results obtained from checking the contact between the cut taper and the gage.

NOTE This feature cannot be used by the SL-S series machines.

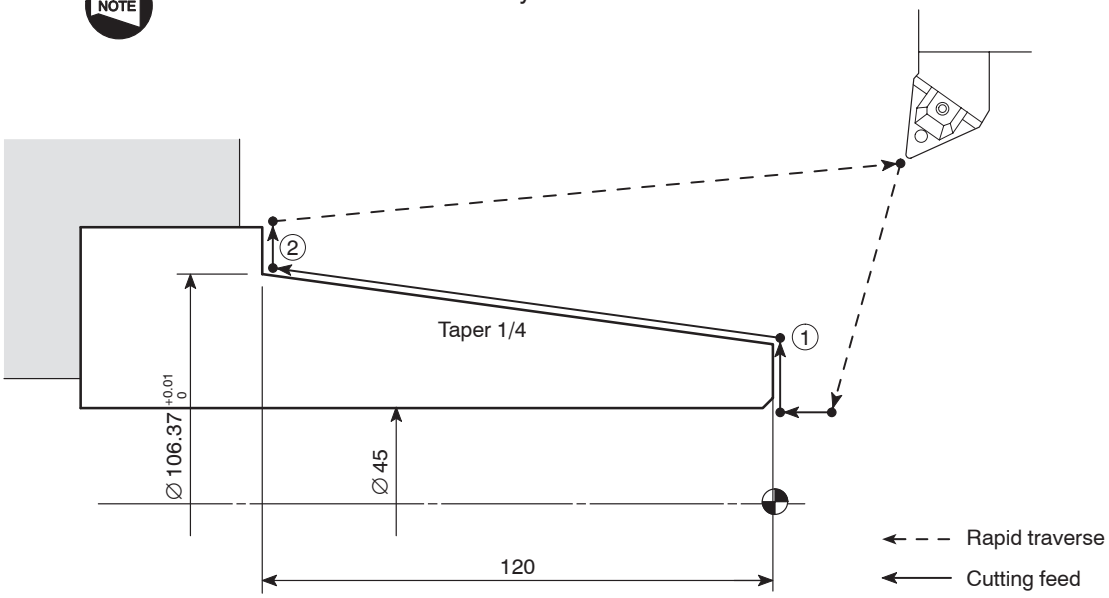

<To adjust the taper angle>

- Change the X value of point ①

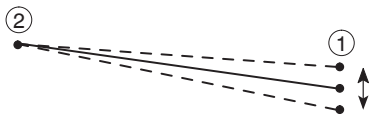

- Change the Z value of point ②

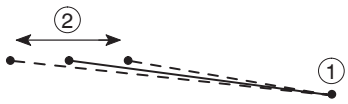

```
O0001;
N1;
G50 S2000;
G00 T0101; ..... ①
G96 S180 M03;
X40.0 Z20.0 M08;
G01 Z0 F1.0;
X76.375 F0.2;
X106.375 Z–120.0 T0111 F0.05; ..... ②
X130.0 F0.25;
G00 X250.0 Z100.0 M09;
M01;
```

Using the tool specified in block ①, ordinary offset for dimensions is made.
Using the tool specified in block ②, taper angle is adjusted. This is summarized in the table below.

Offset Direction	Tool Wear Offset Data	
	01	11
X	0.196 mm	0.199 mm
Z	0.270 mm	0.270 mm

First, set the same tool offset data to the tool wear offset Nos. 01 and 11. After cutting a workpiece, measure the dimensions and adjust the tool wear offset data so that the dimensions can be finished within the specified tolerance.

NOTE

① For the first machining, input the same offset data for both offset numbers (01 and 11).

② Specify the new offset data (11) without canceling the existing offset data (01).

③ Specify the new offset number (11) at the taper cutting command point.

④ Since either of the X or Z offset data of the two tool wear offset numbers is taken as the reference of the taper, always specify the same data for both offset numbers (01, 11).

⑤ The program is created assuming that tool nose R is R0.

Ex. **Specifying the tool wear offset (4) (Adjusting the groove width)**

In a grooving operation, the cut groove width might fall outside the specified tolerance due to tool wear. To offset, the groove width can be adjusted by setting different tool wear offset data for the right side wall and for the left side wall.

NOTE This feature cannot be used by the SL-S series machines.

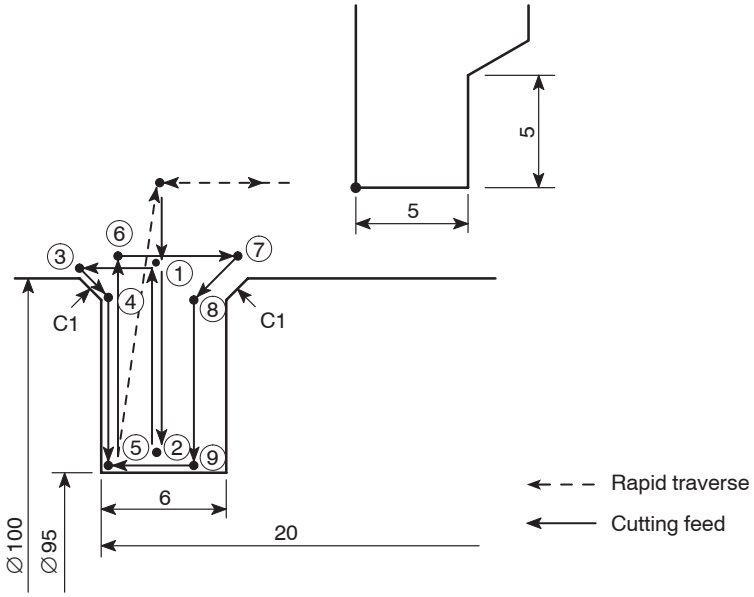


```
O0001;
N1;
G50 S500;
G00 T0101; ..... 1)
G96 S80 M03;
X110.0 Z20.0 M08;
G01 Z–19.5 F2.0;
X102.0; ..... ①
X95.1 F0.1; ..... ②
X102.0 F0.5; ..... ①
Z–22.0; ..... ③
X98.0 Z–20.0 F0.07; ..... ④
X95.0; ..... ⑤
X102.0 W0.1 F0.5; ..... ⑥
Z–17.0 F1.0 T0111; ..... 2) ⑦
X98.0 Z–19.0 F0.07; ..... ⑧
X95.0; ..... ⑨
Z–20.0 T0101 F0.1; ..... 3) ⑤
G00 X110.0 W0.5;
Z20.0;
X150.0 Z100.0;
    ⋮
```

Using the tool specified in blocks 1) and 3), ordinary offset for dimensions is made. Using the tool specified in block 2), groove width is adjusted. This is summarized in the table below.

Offset Direction	Tool Wear Offset Data	
	01	11
X	0.160 mm	0.160 mm
Z	0.325 mm	0.315 mm

First, set the same tool offset data to the tool wear offset Nos. 01 and 11. After cutting a workpiece, measure the dimensions and adjust the tool wear offset data so that the dimensions can be finished within the specified tolerance.

NOTE

① For the first machining, input the same offset data for both offset numbers (01 and 11).

② Specify the new offset data (11) without canceling the existing offset data (01).

③ Specify the new offset number (11) in the block where Z-axis movement (Z–17.0) is specified at the position the cutting tool has released from the workpiece.

④ For the X offset data, specify the same data for both offset numbers (01, 11).

⑤ The program is created assuming that tool nose R is R0.

2. S Function

The S function controls the spindle or rotary tool spindle rotation. A four-digit number specified following address S specifies the spindle speed, rotary tool spindle speed, and the cutting (surface) speed.

The S code defines the following in combination with a G code specified in the same block:

① Spindle speed or rotary tool spindle speed (min^{-1}) . . . . . G97 S_

② Cutting (surface) speed (m/min) . . . . . G96 S_

③ Maximum spindle speed for automatic operation (min^{-1}) . . . . . G50 S_

2.1 Specifying the Spindle Speed (G97 S_)

The G97 mode is used to turn a workpiece with a uniform diameter or for thread cutting, drilling, and milling processes conducted by a rotary tool.

G97 S_ M03(M04);
G97 S_ M203(M204);
G97 S_ M13(M14);

- G97 . . . . . Calls the constant spindle speed command mode.
- S . . . . . Specifies the spindle speed (min^{-1}).
- M03(M04) . . . . Specifies spindle or spindle 1 rotation in the normal (reverse) direction.
- M203(M204) . . Specifies spindle 2 rotation in the normal (reverse) direction.
- M13(M14) . . . . Specifies rotary tool spindle rotation in the normal (reverse) direction.

When a G97 speed command is used in a program, specification of the maximum speed with a G50 command will be ignored. Therefore, when specifying the spindle speed with a G97 command, specify a speed no higher than the lowest speed among the allowable speed limits for the chuck, fixture, and cylinder. If you set a higher speed the workpiece will fly out of the machine, causing serious injuries or damage to the machine.

NOTE

① When the spindle speed control mode is switched from the G96 mode to the G97 mode, if no spindle speed is specified in the G97 block, the spindle speed obtained in the block immediately preceding the G97 block is used as the spindle speed for the G97 mode operation.

Therefore, if no spindle speed is specified in the G97 block, the spindle speed for the G97 mode will depend on the position of the cutting tool in the block preceding the G97 block, and this could adversely affect machining accuracy and shorten the life of the tool.

When switching the spindle speed control mode to the G97 mode, always specify a spindle speed.

② A spindle speed is limited by the feedrates (mm/rev) for a cutting tool.

$$N < \frac{R}{F}$$

N: Spindle speed (min^{-1})
F: Feedrate (mm/rev)
R: Maximum cutting feedrate (mm/min)

③ The M13 and M14 commands can be used only for the MC type machines or Y-axis specification machines.

④ The M203 and M204 commands can be used only for the SL-S series machines.

Ex. **Programming using G97 S_**

```
O0001;
N1;
G00 T0101;
G97 S1000 M03; . . . . . Starting the spindle at 1000 min-1 in the normal
                         direction.
    ⋮
```

2.2 Specifying the Cutting Speed (G96 S_)

The G96 command is used to maintain a constant cutting speed (m/min). It is hard to calculate a spindle speed each time the workpiece diameter changes.

The constant cutting (surface) speed control is effectively used in such cases.

COMMAND

G96 S_ M03(M04);
G96 S_ M203(M204);

- G96 . . . . . Calls the constant surface speed control mode.
- S . . . . . Specifies the cutting speed (m/min).
- M03(M04) . . . . Specifies spindle or spindle 1 rotation in the normal (reverse) direction.
- M203(M204) . . Specifies spindle 2 rotation in the normal (reverse) direction.

NOTE The M203 and M204 commands can be used only for the SL-S series machines.

Ex. **Programming using G96 S_**

O0001;
N1;
G50 S2500;
G00 T0101;
G96 S120 M03; . . . . . Starting the spindle or spindle 1 in the normal direction; surface speed is 120 m/min.
⋮

WARNING

In the G96 (constant surface speed control) mode, the spindle speed changes as the cutting tool moves in the X-axis direction.

In facing operation, the spindle speed increases and reaches the maximum allowable spindle speed to maintain the cutting speed constant, as the cutting tool approaches the center of the spindle. In this case, the chuck gripping force, cutting force, and centrifugal force of the workpiece cannot be balanced to hold the workpiece securely in the chuck. The workpiece may fly out of the machine and cause a serious accident.

For the relationship between the spindle speed and chuck gripping force, refer to the instruction manual supplied by the chuck and cylinder manufacturers.

Specify the spindle speed limit, which is smaller than the lowest value among the allowable speed of the chuck, fixture, and the cylinder, using the "G50 S_ ;" in a block before specifying the spindle speed in the G96 block.

For details of "G50 S_ ;", refer to 2.3, "Specifying the Spindle Speed Limit for Automatic Operation (G50 S_)".

2.3 Specifying the Spindle Speed Limit for Automatic Operation (G50 S_)

When facing a workpiece in the G96 constant cutting speed mode, the spindle speed will increase to “infinite” speed if the cutting tool is moved to X0.

Therefore, the spindle speed limit must be specified to prevent chuck gripping force from being lowered due to centrifugal force, when cutting a workpiece in the G96 mode.

① **The spindle speed limit set using G50 must be no higher than the lowest of the individual allowable speed limits for the chuck, fixture, and cylinder. If you set a higher speed the workpiece will fly out of the machine, causing serious injuries or damage to the machine.**

② **In the G96 (constant surface speed control) mode, the spindle speed increases as the cutting tool approaches the center of the spindle.**

Near the center of the spindle, the spindle speed will reach the allowable maximum speed of the machine. At this speed, the chuck gripping force, cutting force, and centrifugal force cannot be balanced to hold the workpiece securely in the chuck. As a result, the workpiece will fly out of the machine, causing serious injuries or damage to the machine.

The spindle speed limit must always be specified in a part program by using the G50 command in a block preceding the G96 block, in order to clamp the spindle speed at the specified speed.

G50 S_ ;

- G50 . . . . . Calls the mode to specify the spindle speed limit for automatic operation.
- S . . . . . Specifies spindle speed limit (min^{-1}).

① **The setting of the spindle speed override switch (if there is one) is valid even when a spindle speed limit is set using G50.**

If the switch is set to 110% or 120%, for example, the programmed spindle speed will be overridden in accordance with this setting. If this causes the actual spindle speed to exceed the allowable speed of the chuck, fixture, or cylinder, the workpiece will fly out of the chuck during machining, causing serious injuries or damage to the machine.

Therefore, the spindle speed override switch must be set at 100% or lower.

WARNING

② **When a G97 speed command is used in a program, specification of the maximum speed with a G50 command will be ignored. Therefore, when specifying the spindle speed with a G97 command, specify a speed no higher than the lowest speed among the allowable speed limits for the chuck, fixture, and cylinder. If you set a higher speed the workpiece will fly out of the machine, causing serious injuries or damage to the machine.**

Ex. **Programming using G50 S_**

```
O0001;
N1;
G50 S2000; ..... Setting the spindle speed limit for automatic
                 operation at 2000 min–1
G00 T0101;
G96 S100 M03; ..... Starting the spindle or spindle 1 in the normal
                    direction at a cutting speed of 100 m/min
    ⋮
    ⋮          Machining program
    ⋮
G00 X100.0 Z50.0;
M01;

N2;
G00 T0202;
G97 S800 M03; ..... Starting the spindle or spindle 1 in the normal
                    direction at 800 min–1
```

NOTE The setting of 2000 min–1 for the allowable maximum spindle speed that is applied for automatic operation is disregarded.

```
    ⋮
    ⋮          Machining program
    ⋮
G00 X150.0 Z50.0;
M01;

N3;
G50 S1000; ..... Setting the spindle speed limit for automatic
                 operation at 1000 min–1
G00 T0303;
G96 S200 M03; ..... Starting the spindle or spindle 1 in the normal
                    direction at a cutting speed of 200 m/min
    ⋮
    ⋮          Machining program
    ⋮
G00 X150.0 Z50.0 M05;
M30;
```

2.4 Relationship of the Cutting Speed, Diameter, and Spindle Speed

When a program is executed in the G96 constant surface speed mode, the spindle is controlled to maintain the specified cutting speed (S_) when the tool moves along the X-axis.

The formula to calculate spindle speed:

$$N = \frac{1000V}{\pi \cdot D}$$

N: Spindle speed (min^{-1})
V: Cutting speed (m/min)
D: Workpiece diameter (mm)
π : Circumference constant (3.14)

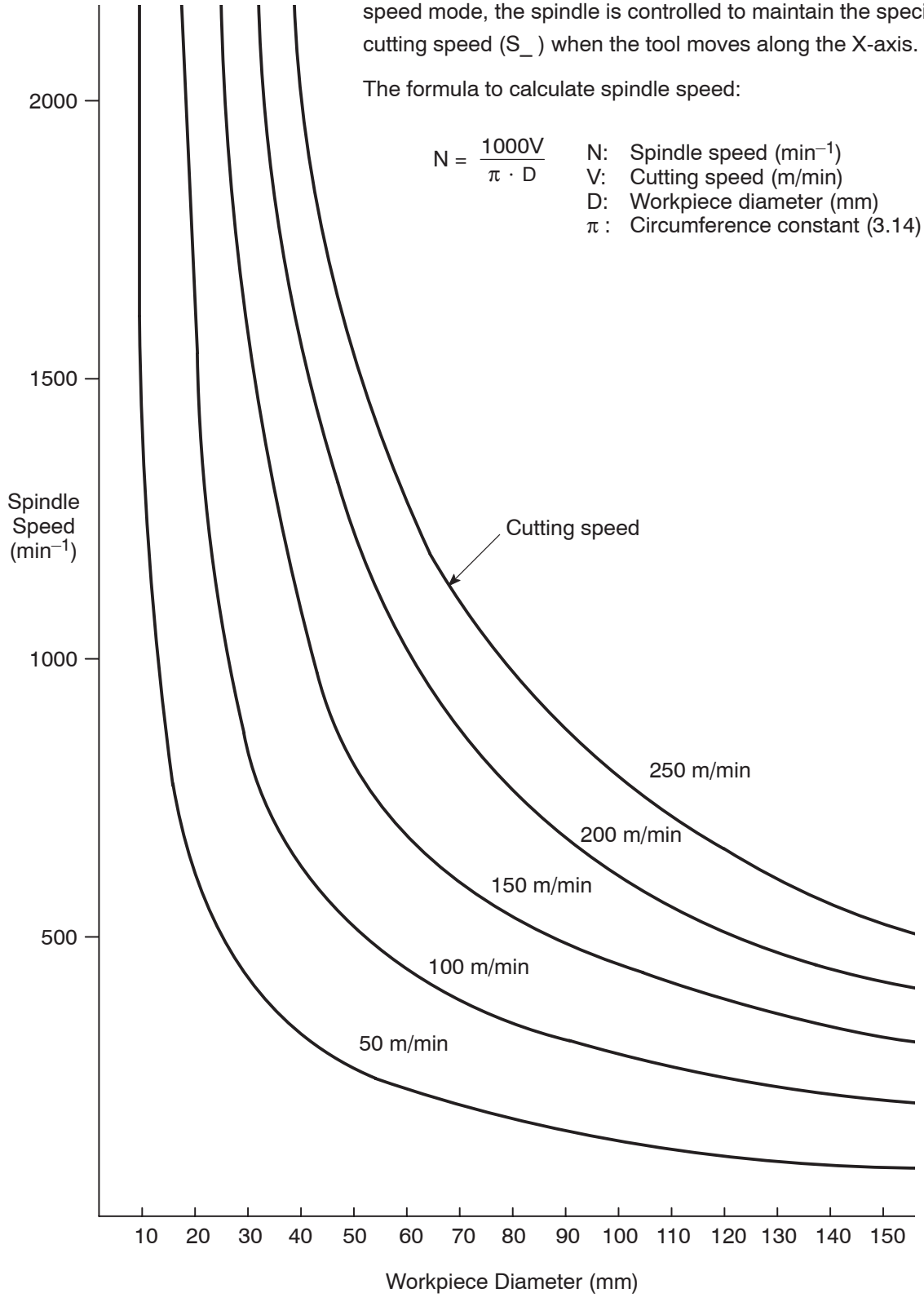

2.5 Workpiece Materials and Cutting Speeds

Allowed cutting speeds and spindle speeds will vary depending on the workpiece material and how rigidly the workpiece is clamped in the chuck, etc. The following table shows cutting speeds for different workpiece material and types of cutting.

For additional details, refer to the catalog available from the cutting tool manufacturer.

Cutting Speed (m/min)						
		Roughing	Finishing	Grooving	Thread cutting	Drilling (H.S.S.)
Carbon steel (AISI 1045)		120	200	100	120	20-25
Alloy steel (AISI 4140)		100	180	100	100	20
Free cutting steel	Carbon steel	180	230	120	140	20-25
	Alloy steel	160	200	100	120	20
Cast steel		120	150	80	90	20
Stainless steel		60	120	50	60	10-15
Cast iron (AISI 35)		80	140	80	100	20-25
Aluminum		200	300	150	150	60

<Conditions>

1) The workpiece is rigidly clamped in the chuck.
2) No vibration is generated when a workpiece is rotated at a high speed.
3) The insert is carbide-coating cermet.
4) Cutting speeds will vary within a range of ±20% from the listed values, depending on the cutting conditions.

Use the values in the table only for reference purpose.

For actual cutting, determine the proper cutting speed after thoroughly reviewing the cutting conditions.

3. F Function

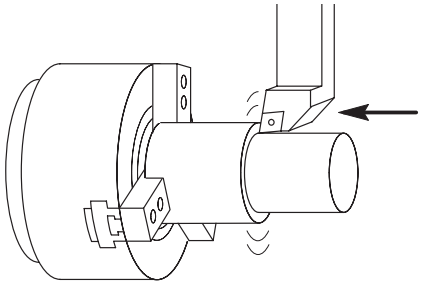

The F function specifies the feedrate of a cutting tool.

The F code is specified with a G code that calls a linear or circular cuts mode (G01, G02, G03, etc.).

The feedrate is specified in two different modes depending on the G code which is specified in the same block.

① Feedrate per revolution (mm/rev)
. . . . . G99 F_

② Feedrate per minute (mm/min)
. . . . . G98 F_

When the G code mode is switched between the G98 mode and the G99 mode, it is necessary to specify an F code.

3.1 Feed per Spindle Revolution (G99 F_)

In the G99 mode, an F code specifies the feedrate per spindle revolution.

Generally, O.D. cutting, thread cutting, and I.D. cutting are programmed using the G99 command.

COMMAND

G99 G01 X(U)_ Z(W)_ F_ ;
G99 G02 (G03) X(U)_ Z(W)_ R_ F_ ;
G99 G02 (G03) X(U)_ Z(W)_ I_ K_ F_ ;

- G99 . . . . . Calls the feed per spindle revolution mode.
- F . . . . . Specifies the feedrate in ordinary control (precision feed control) (mm/rev or in./rev).

NOTE

① When power is turned on, the NC is in the G99 mode. Therefore, it is not necessary to specify the G99 command in a program unless the mode has been changed to the G98 mode.

② Once specified, the feedrate remains valid until another feedrate is specified.

Feedrate is limited by the relationship between the spindle speed and the rapid traverse rate of the X-axis as indicated below.

Metric System (mm/rev)	Inch System (in./rev)
$F < \frac{R}{N}$	$F < \frac{R}{25.4 \times N}$

F : Feedrate (mm/rev, in./rev)
N: Spindle speed (min^{-1})
R: Maximum cutting feedrate (mm/min)

NOTE
The above numerical values are only for reference. Depending on the selected cutting conditions, the cutting load may become excessive making thread cutting hard. If a servo alarm occurs, change the cutting conditions.

Ex. **Programming using G99 F_**

To carry out I.D. cutting by changing feedrates

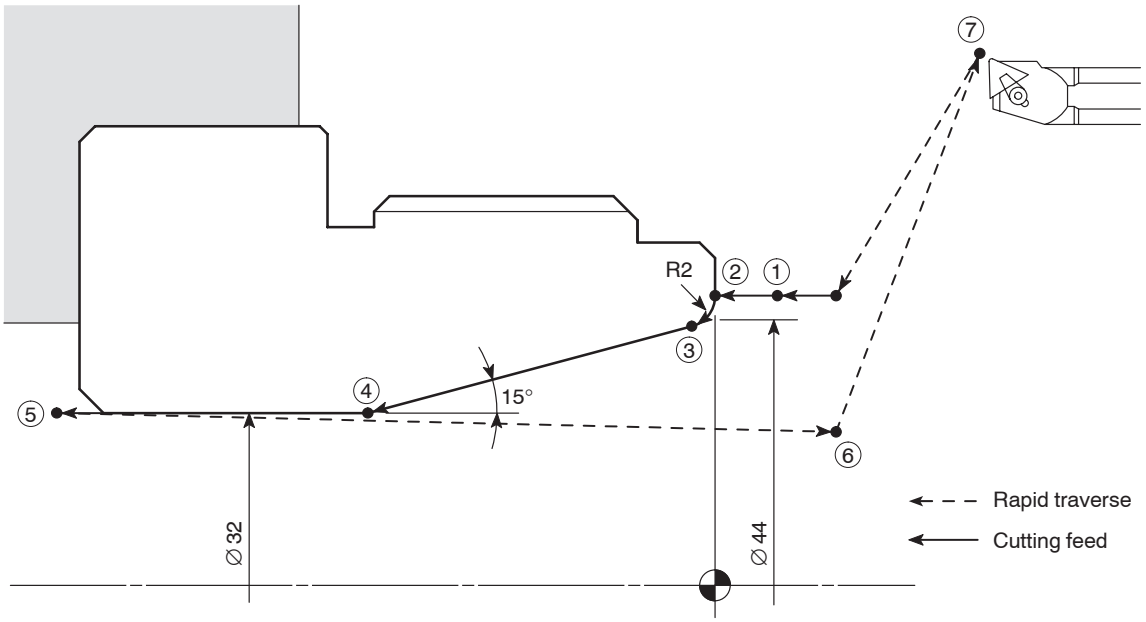

O0001;
N1;
G50 S2000;
G00 T0101;
G96 S200 M03;
X47.069 Z20.0 M08;

G01 Z1.0 **F1.0**; . . . . . Positioning at ① to move the cutting tool close to the workpiece

Z0 **F0.2**; . . . . . Positioning at ② at a feedrate of 0.2 mm/rev

G02 X43.205 Z–1.482 R2.0 **F0.07**; . . . Cutting an arc of 0.2 mm radius in the clockwise direction at a feedrate of 0.07 mm/rev

G01 X32.0 Z–22.392; . . . . . Cutting along path ③ → ④ at a feedrate of 0.07 mm/rev

Z–41.0 **F0.1**; . . . . . Cutting along path ④ → ⑤ at a feedrate of 0.1 mm/rev

G00 U–1.0 Z20.0; . . . . . Positioning at ⑥ at a rapid traverse rate to move the cutting tool away from the workpiece

X200.0 Z150.0 M09; . . . . . Positioning at ⑦ where the turret head can be rotated

M01;

3.2 Feed per Minute (G98 F_)

In the G98 mode, an F code specifies the feedrate per minute.

This mode is used to write a program for pull-out finger operation or rotary tool spindle, etc.

G98 G01 X(U)_ Z(W)_ F_ ;
G98 G02 (G03) X(U)_ Z(W)_ R_ F_ ;
G98 G02 (G03) X(U)_ Z(W)_ I_ K_ F_ ;

- G98 . . . . . Calls the feed per minute mode.
- F . . . . . Specifies the feedrate (mm/min or in/min).

In the G98 mode, the turret moves at the feedrate specified by the F code even when the spindle is not rotating. Make sure that the cutting tool will not strike the workpiece, etc., since this could damage the machine.

G98;

G01 Z_ F100.0; . . . . . The turret moves at a rate of 100 mm/min even when the spindle is not rotating.

① The G98 command cannot be used for thread cutting operation.

② Once specified, the feedrate remains valid until another feedrate is specified.

The programmable feedrate range is given in the table below.

Metric System (mm/min)	Inch System (in/min)
1 to rapid traverse rate	0.01 to $\frac{\text{rapid traverse rate}}{25.4}$

For rapid traverse rates, refer to page D–25 (3.4).

3.3 Feedrate for Finishing

Feedrates for finishing are determined based on the nose radius of the cutting tool to be used and the surface roughness specified on the drawing.

<Ideal surface roughness for finishing>

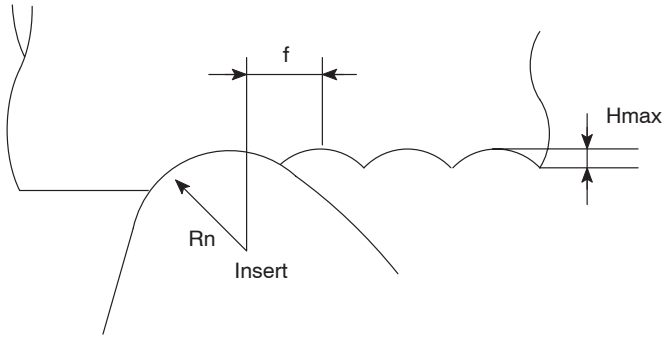

$$Hmax = \frac{f^2}{8 \cdot Rn}$$

Hmax: Maximum value of ideal finish surface roughness

f: Feedrate (mm/rev)

Rn: Tool nose radius (mm)

Surface Roughness Symbol	Indication	Hmax (mm)	Nr			
			0.4	0.5	0.8	1.0
▽▽	25-S	Max. 0.025	0.2828	0.3162	0.4000	0.4472
	18-S	Max. 0.018	0.2400	0.2683	0.3394	0.3794
	12-S	Max. 0.012	0.1959	0.2190	0.2771	0.3098
▽▽▽	6-S	Max. 0.006	0.1385	0.1549	0.1959	0.2190
	3-S	Max. 0.003	0.0979	0.1095	0.1385	0.1549
	1.5-S	Max. 0.0015	0.0692	0.0774	0.0979	0.1095
▽▽▽▽	0.8-S	Max. 0.0008	0.0506	0.0565	0.0715	0.0800
	0.4-S	Max. 0.0004	0.0357	0.0400	0.0505	0.0565

(mm/rev)

NOTE The values indicated above are theoretical values obtained in calculation. During actual cutting, the specified surface roughness may not be achieved, depending on various factors. Factors that can effect finishing accuracy include how far the tool projects, how the workpiece is clamped or vibration.

3.4 Table of Rapid Traverse Rates

The rapid traverse rates of the individual axes are indicated below.

Machine Model	Rapid Traverse Rate				
	X-axis	Z-axis	Y-axis	B-axis	C-axis
	mm/min	mm/min	mm/min	mm/min	min^{-1}
SL-150 SL-150MC	18000	24000	——	——	200*1
SL-150Y	18000	24000	6000	——	200*1
SL-150S SL-150SMC	18000	24000	——	24000	200*1
SL-150SY	18000	24000	6000	24000	200*1
SL-200 SL-200MC	18000	24000	——	——	150
SL-200S SL-200SMC	18000	24000	——	24000	150
SL-250 SL-250MC	18000	24000	——	——	100
SL-250S SL-250SMC	18000	24000	——	24000	100
SL-303/700 SL-303MC/700	15000	24000	——	——	100*2
SL-303/1500 SL-303MC/1500	15000	20000	——	——	50
SL-400 SL-400MC	20000	24000	——	——	56
SL-600 SL-600MC	20000	20000	——	——	25
SL-65 SL-65MC	5000	8000	——	——	——
SL-75 SL-75MC	5000	8000	——	——	——
LL-7 LL-8	5000	8000	——	——	——
VL-25	24000	20000	——	——	——
VL-55 VL-55MC	24000	20000	——	——	25
TL-40 TL-40MC	6000	12000	——	——	20
CL1500, CL2000	24000	24000	——	——	——

NOTE

*1: With the high output specification, C-axis rapid traverse rate is 100 min^{-1}.

*2: With the type B, C-axis rapid traverse rate is 50 min^{-1}.

3.5 Table of Maximum Cutting Feedrate

The maximum cutting feedrate of the individual axes are indicated below for each model.

Machine Model	Maximum cutting feedrate	
	X-axis	Z-axis
	mm/min	mm/min
SL-65	4000	6200
SL-65M	4000	6200
SL-75	4000	6200
SL-75MC	4000	6200
ZL-25/1000 ZL-25MC	X1: 7000 X2: 6500	Z1: 5500 Z2: 5500
CL1500 CL2000	10000	8500
CL1500T CL2000T	10000	6000

CHAPTER E
AUTOMATIC TOOL NOSE RADIUS OFFSET

This chapter describes how the automatic tool nose radius offset function works.

Because the cutting edge of the tool is rounded, the actual cutting point differs from the point specified in a program. Therefore, if a program is written based on the points known from a part drawing, the workpiece is not finished to the dimensions specified on the drawing. To finish the workpiece precisely to the dimensions specified on the drawing, the points to be specified in the program must be calculated taking the difference between the programmed point and actual cutting point. The automatic tool nose radius offset function generates the tool paths to finish the workpiece correctly to the dimensions specified on the drawing from the program in which the points specified on the drawing are directly used.

Since there are a number of tool patterns which will be used for actual machining and they will differ among users, it is not possible to explain all of the tool patterns in this manual. The explanation given in this chapter is concentrated on the basic tool path patterns along with the cautions to be taken into consideration for programming so that the readers will be able to acquire basic knowledge of the automatic tool nose radius offset function.

For more details, please refer to the instruction manuals supplied by the NC unit manufacturer.

CONTENTS

E : AUTOMATIC TOOL NOSE RADIUS OFFSET

1. General E–1

2. Conditions for Use of the Automatic Tool Nose Radius Offset Function E–4
   - 2.1 Imaginary Tool Tip E–5
   - 2.2 Setting Tool Nose Radius E–8
   - 2.3 Specifying the Offset Direction E–8

3. Technical Terms Used in the Explanation of the Automatic Tool Nose Radius Offset Function E–9
   - 3.1 Start-up E–10
   - 3.2 Offset Mode E–11
   - 3.3 Cancel Mode E–12

4. General Cautions on the Automatic Tool Nose Radius Offset Function E–14
   - 4.1 If a Wall Lies at the End of Cutting E–14
   - 4.2 Overcut in the Automatic Tool Nose Radius Offset Mode E–17

5. Example Programs E–20
   - 5.1 Basic Programs E–20
   - 5.2 Recommended Example Programs E–30
   - 5.3 Programming for a Sample Workpiece E–33

1. General

The tool nose does not have a sharp edge but is rounded (tool nose radius) as illustrated below. Therefore, the point of the tool nose used for programming is offset from the actual cutting point. The tool nose radius offset function is used to eliminate dimensional errors caused by this difference.

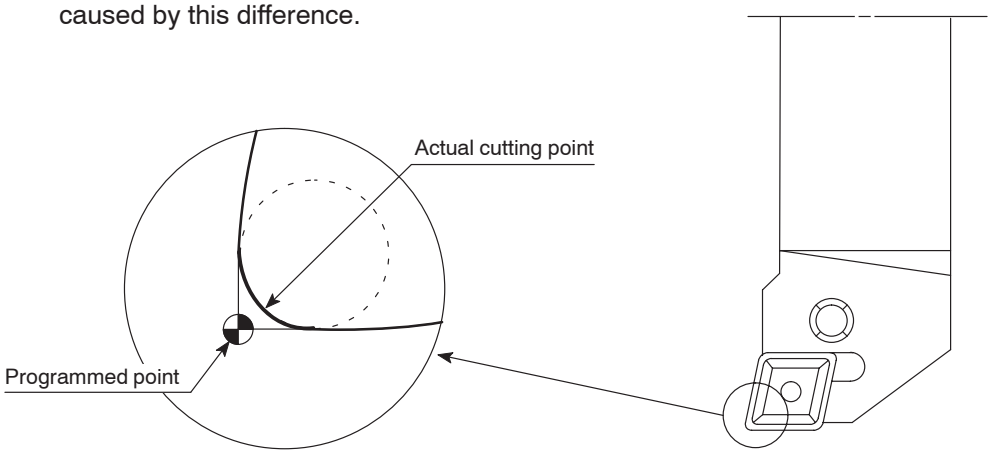

If a program is created without taking the nose radius into consideration, it will cause excessive or insufficient cutting.

The automatic tool nose radius offset function is used to eliminate excessive or insufficient cutting.

Workpiece zero point Programmed point • Actual cutting point

1) Facing carried out perpendicular to the spindle center line (cutting in the X-axis direction) 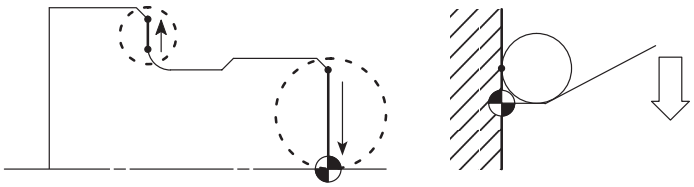	The tool nose radius does not pose any problems since the programmed point and the actual cutting point lie on the same straight line.
2) O.D. or I.D. cutting carried out in parallel with the spindle center line (cutting in the Z-axis direction) 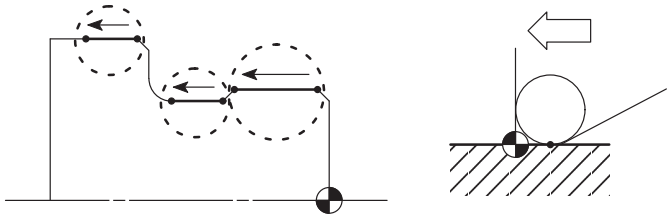	The tool nose radius does not pose any problems since the programmed point and the actual cutting point lie on the same straight line.

3) Taper cutting 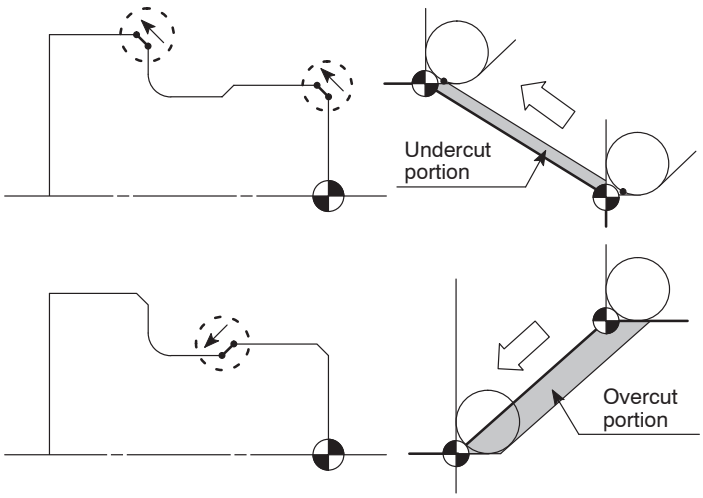	If taper cutting, including chamfering, is programmed without taking into consideration the radius of the tool nose, dimensional errors will occur due to overcut or undercut as illustrated on the left.
4) Arc cutting 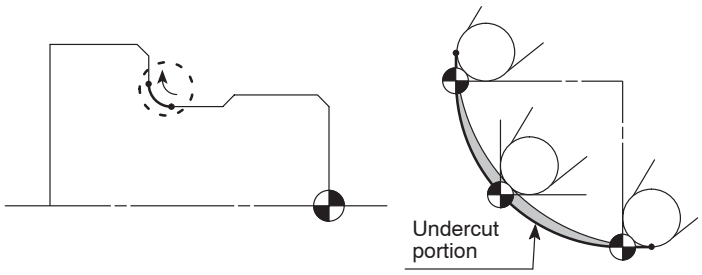	If arc cutting is programmed without taking into consideration the radius of the tool nose, dimensional errors will occur due to overcut or undercut as illustrated on the left.

Reasons why excessive (overcut) or insufficient (undercut) cutting occurs:

The program used for machining along paths "① → ②" and "③ → ④ → ⑤ → ⑥" is used for the example.

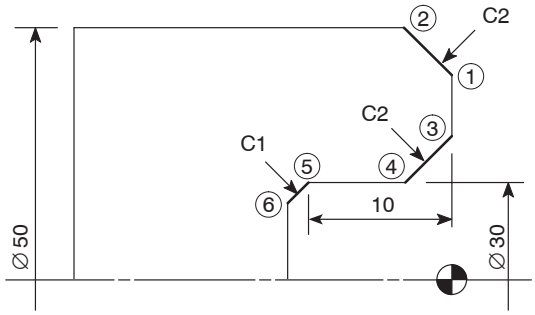

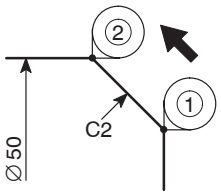

Fig. 1

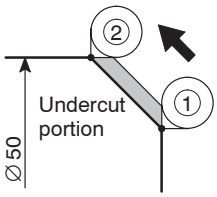

Fig. 2

<If the tool nose radius is disregarded (path ① → ②)>

```
    ⋮
X46.0 Z0; ..... ①
X50.0 Z–2.0; ..... ②
    ⋮
```

If the above program is executed, an undercut portion is left as in Fig. 2 because the programmed point and actual cutting point differ from each other.

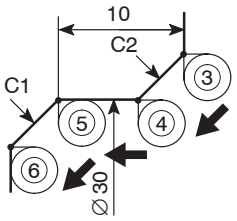

Fig. 3

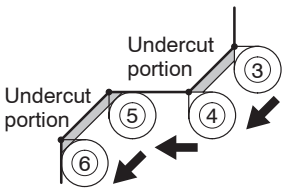

Fig. 4

<If the tool nose radius is disregarded (path ③ → ④ → ⑤ → ⑥)>

⋮

X34.0 Z0; . . . . . ③
X30.0 Z–2.0; . . . . . ④
Z–10.0; . . . . . ⑤
X28.0 Z–11.0; . . . . . ⑥

If the above program is executed, an undercut portion is left as in Fig. 4 because the actual cutting point differs from the programmed point.

Excessive cutting occurs due to the similar reasons.

To eliminate such dimensional errors in machining, the tool paths should be offset using the G41 and G42 commands.

COMMAND

G01(G00) G41 X_ Z_ F_ ;
G01(G00) G42 X_ Z_ F_ ;
G01(G00) G40 X_ Z_ I_ K_ F_ ;

- G01(G00) . . . . Calls the interpolation mode in which the tool nose radius offset function is specified.
  G00 . . Rapid traverse
  G01 . . Cutting feed
- G41 . . . . . Calls the tool nose radius offset (left) function.
  The tool position is offset to the left in reference to the tool advancing direction.
- G42 . . . . . Calls the tool nose radius offset (right) function.
  The tool position is offset to the right in reference to the tool advancing direction.
- G40 . . . . . Cancels the tool nose radius offset function.
- X, Z . . . . . Specifies the coordinate values of the end point.
- I, K . . . . . The direction of the workpiece defined in the following block.
  The I and K commands are specified in incremental values (I: in radius).
- F . . . . . Specifies the feedrate.

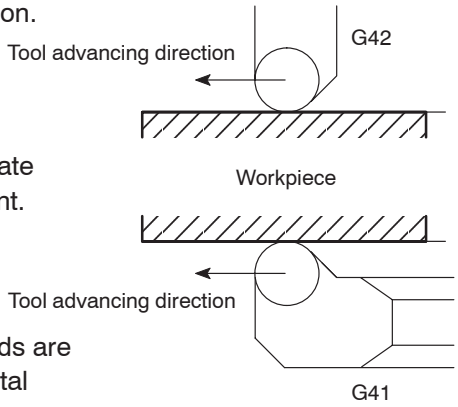

CAUTION

The programmer must thoroughly understand the nature of the G41 and G42 functions as well as the tool paths to be generated. If the G41 and G42 commands are used improperly, the cutting tool might be fed into or hit against the workpiece to be machined to cause breakage of the cutting tool or defective machining.

2. Conditions for Use of the Automatic Tool Nose Radius Offset Function

The operations required to use the automatic tool nose radius offset function (G40, G41, G42) are indicated below:

1) Setting the imaginary tip position

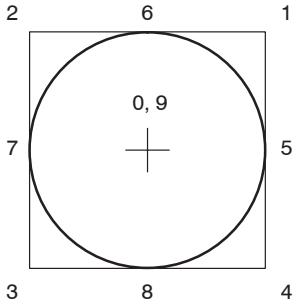

Set the code number (0 to 9), which represents the tip position of the cutting tool to be used, to T column displayed on the OFFSET/WEAR screen.

For an O.D. cutting tool, for example, input “3”.

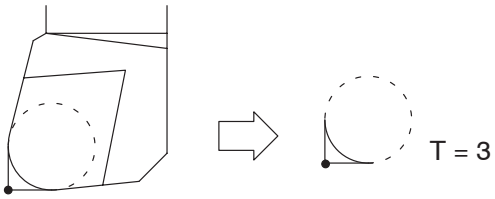

2) Setting the nose radius of the cutting tools to be used

OFFSET / GEOMETRY O0001 N00000

NO.	X	Z	R	T
G 01	0. 000	0. 000	0. 800	2
G 02	0. 000	0. 000	0. 800	3
G 03	0. 000	0. 000	0. 400	2
G 04	0. 000	0. 000	0. 400	3
G 05	0. 000	0. 000	0. 200	2
G 06	0. 000	0. 000	0. 800	3
G 07	0. 000	0. 000	0. 200	3
G 08	0. 000	0. 000	0. 800	2

ACTUAL POSITION (RELATIVE)

U 0.000 W 0.000

Set the nose radius of the cutting tool to be used to the R column in either the OFFSET/GEOMETRY or OFFSET/WEAR screen.

NOTE If the nose radius is set to the R column in both of the OFFSET/GEOMETRY and OFFSET/WEAR screens, offset is made by both of the input data, causing excessive or insufficient cutting.

For the tool having nose radius of 0.8 mm, for example, input “0.8”.

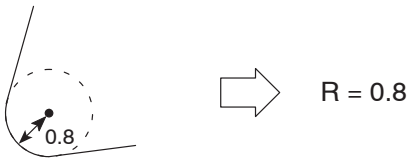

3) Determining the offset direction

Decide the direction (right or left) in which the tool should be offset in reference to the direction the tool will advance.

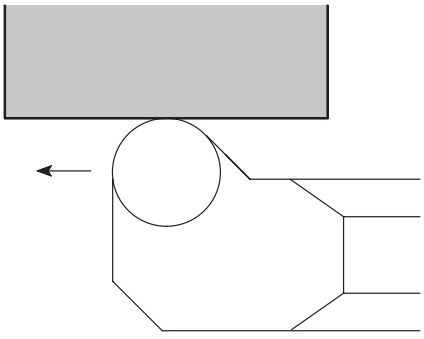

G41 Offset to the left

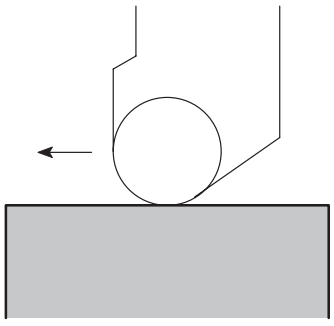

G42 Offset to the right

2.1 Imaginary Tool Tip

To identify the point which is used for programming, the term “imaginary tool tip” is used.

It is necessary to set the code number (0 to 9) which represents the imaginary tool tip position to the T column displayed on the OFFSET/WEAR screen.

NOTE The position of the imaginary tool tip, in reference to the center of the tool nose, is determined according to the tool shape and the tool mounting method in the turret head. The imaginary tool tip position data must be set in advance as with tool offset data.

OFFSET / WEAR O0001 N00000

NO.	X	Z	R	T
W 01	0. 000	0. 000	0. 000	0
W 02	0. 000	0. 000	0. 000	0
W 03	0. 000	0. 000	0. 000	0
W 04	0. 000	0. 000	0. 000	0
W 05	0. 000	0. 000	0. 000	0
W 06	0. 000	0. 000	0. 000	0
W 07	0. 000	0. 000	0. 000	0
W 08	0. 000	0. 000	0. 000	0

ACTUAL POSITION (RELATIVE)
U 0.000 W 0.000

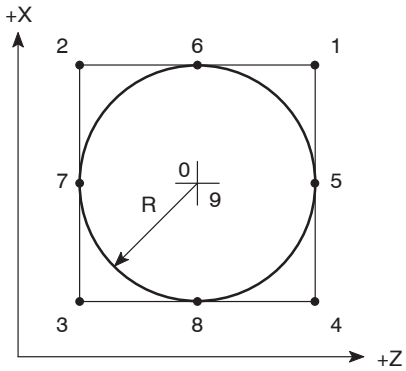

0 - 9: Imaginary tool tip position

NOTE The number of tool offset data pairs will vary according to the machine model and the NC and machine specifications.

T	Imaginary Tool Tip Position	Examples
0	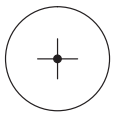	In normal operation, the center of the tool nose is not specified as the imaginary tool tip position.
1	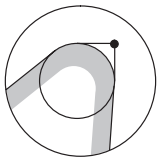	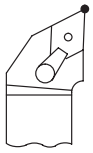
2	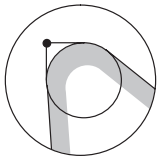	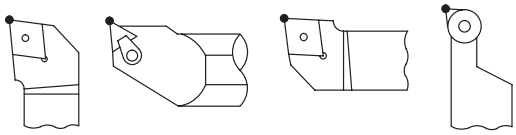
3	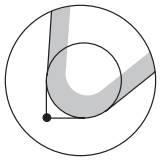	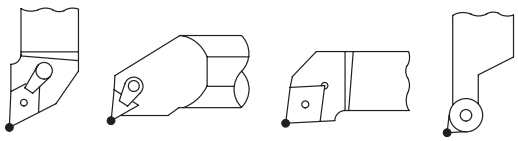

T	Imaginary Tool Tip Position	Examples
4	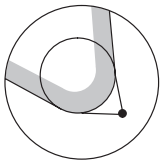	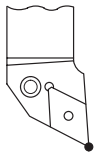
5	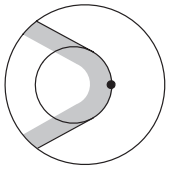	In normal operation, to specify such point is really rare. 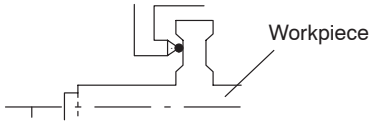
6	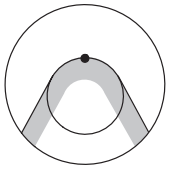	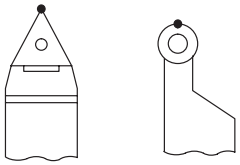
7	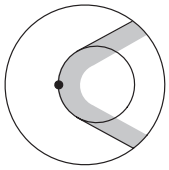	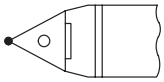
8	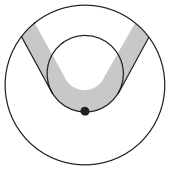	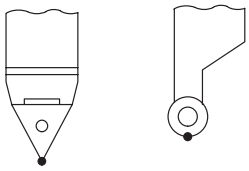
9	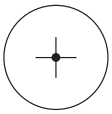	Same as in the case of “0”.

NOTE The number indicated above for the imaginary tool tip position (T number) is for general applications and, in some cases, specifying a T number different from this indication might give better results.

The most appropriate T number should be determined and specified on the process sheet by a programmer when he/she creates the tooling sheet.

The imaginary tool tip position is explained below using an O.D. cutting tool and an I.D. cutting tool as examples.

<O.D. cutting tool>

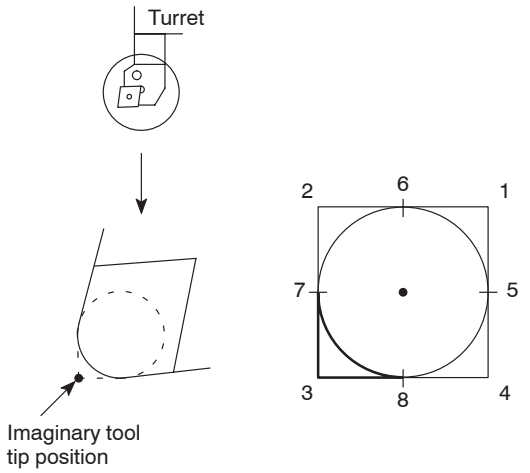

The imaginary tool tip position in reference to the center of tool nose is defined by the T number “3”.

The imaginary tool tip position code number (T number) should be set for offset number that corresponds to the last two digits of a T code.

OFFSET / WEAR O0001 N00000

NO.	X	Z	R	T
W 01	0. 000	0. 000	0. 000	0
W 02	0. 000	0. 000	0. 000	3
W 03	0. 000	0. 000	0. 000	0
W 04	0. 000	0. 000	0. 000	0
W 05	0. 000	0. 000	0. 000	0
W 06	0. 000	0. 000	0. 000	0
W 07	0. 000	0. 000	0. 000	0
W 08	0. 000	0. 000	0. 000	0

ACTUAL POSITION (RELATIVE)
U 0.000 W 0.000

When setting the selected T number for “T0202” tool, set “3” to the T column for offset number “W02” on the OFFSET/WEAR screen.

<I.D. cutting tool>

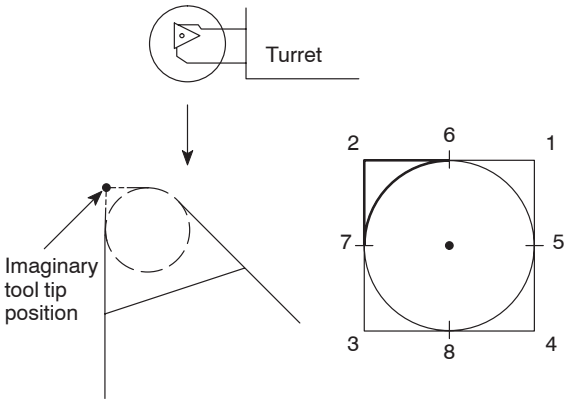

The imaginary tool tip position in reference to the center of tool nose is defined by the T number “2”.

The imaginary tool tip position code number (T number) should be set for offset number that corresponds to the last two digits of a T code.

OFFSET / WEAR O0001 N00000

NO.	X	Z	R	T
W 01	0. 000	0. 000	0. 000	0
W 02	0. 000	0. 000	0. 000	0
W 03	0. 000	0. 000	0. 000	2
W 04	0. 000	0. 000	0. 000	0
W 05	0. 000	0. 000	0. 000	0
W 06	0. 000	0. 000	0. 000	0
W 07	0. 000	0. 000	0. 000	0
W 08	0. 000	0. 000	0. 000	0

ACTUAL POSITION (RELATIVE)
U 0.000 W 0.000

When setting the selected T number for “T0303” tool, set “2” to the T column for offset number “W03” on the OFFSET/WEAR screen.

2.2 Setting Tool Nose Radius

When the automatic tool nose radius offset function, called by the G41 or G42 is used, it is necessary to set the tool nose radius to the R column in either the OFFSET/GEOMETRY or OFFSET/WEAR screen.

The offset number for which the nose radius is set should correspond to the offset number which is specified in a T code.

For a T code, refer to page D–1 (1.).

NOTE If the nose radius is set to the R column in both of the OFFSET/GEOMETRY and OFFSET/WEAR screens, offset is made by both of the input data, causing excessive or insufficient cutting.

OFFSET / GEOMETRY O0001 N00001

NO.	X	Z	R	T
G 01	0. 000	0. 000	0. 800	0
G 02	0. 000	0. 000	0. 800	0
G 03	0. 000	0. 000	0. 400	0
G 04	0. 000	0. 000	0. 400	0
G 05	0. 000	0. 000	0. 200	0
G 06	0. 000	0. 000	0. 800	0
G 07	0. 000	0. 000	0. 200	0
G 08	0. 000	0. 000	0. 800	0

ACTUAL POSITION (RELATIVE)
U 145.962 W 101.823

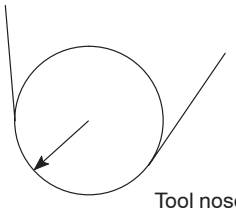

Tool nose radius offset data

NOTE In the example above, the tool nose radius is set on the OFFSET/GEOMETRY screen.

2.3 Specifying the Offset Direction

The tool paths are offset either to the left (G41) or to the right (G42) in reference to the direction the cutting tool will advance.

When the direction the tool paths should be offset is determined, enter the corresponding G code to the program.

The location where the G code should be entered in a program and related cautions are explained in the following sections.

3. Technical Terms Used in the Explanation of the Automatic Tool Nose Radius Offset Function

The technical terms special to the automatic tool nose radius offset function are given below.

Term	Description
Start-up	The first block in which the G41 or G42 command is specified In the start-up block, positioning is made so that the center of tool nose lies at right angles to the axis movement specified in the next block.
Offset mode	The mode in which the automatic tool nose radius offset function is valid after the start-up
Cancel mode	The state in which the automatic tool nose radius offset function is canceled by executing G40 The cancel mode starts from the end point of the block that precedes the G40 block. The center of the tool is positioned right angles to the tool path programmed in the preceding block.

Ex.

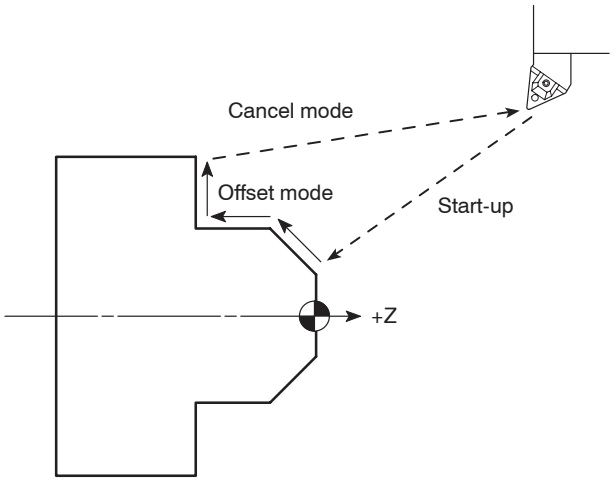


```
      ⋮
G42 G00 X_ Z_ ; ........... Start-up
G01 X_ Z_ F_ ; ......
X_ Z_ ;                  .... Offset mode
X_ Z_ ;         ......
G40 G00 X_ Z_ ; ........... Cancel mode
      ⋮
```

3.1 Start-up

The first block in which the G41 or G42 command is specified is called the start-up block.

In the start-up block, positioning is made so that the center of tool nose lies at right angles to the axis motion specified in the next block.

Ex. 1

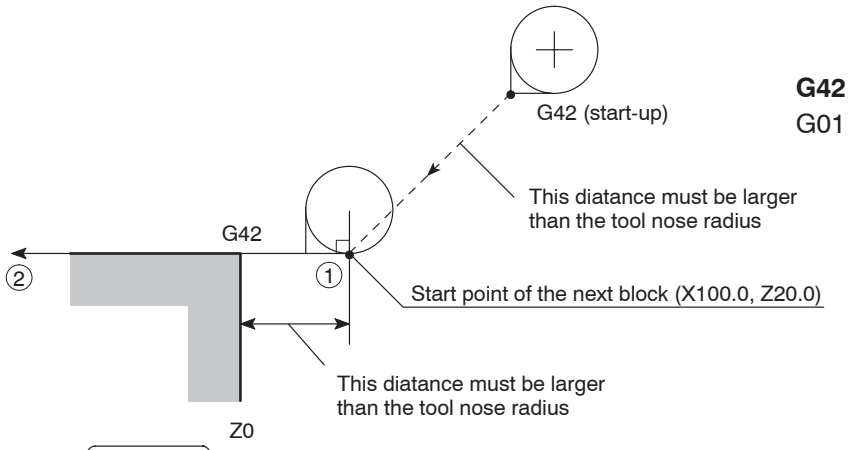

⋮
G42 G00 X100.0 Z20.0; . . . . . ①
G01 Z_ F_ ; . . . . . ②
⋮

Ex. 2

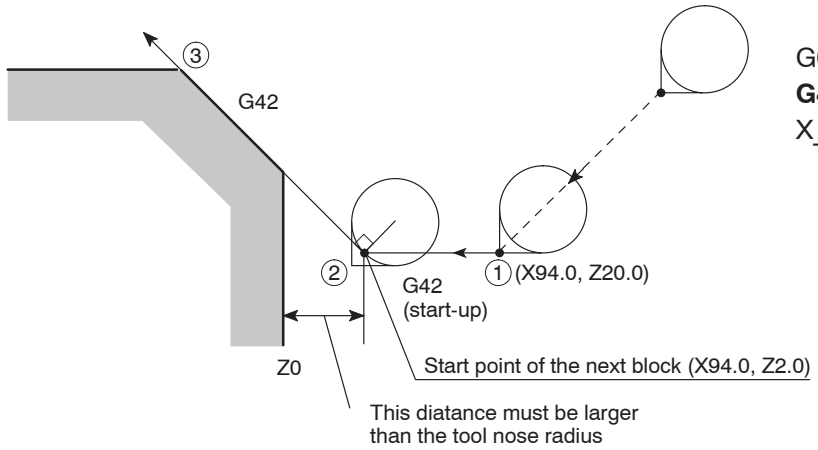

⋮
G00 X94.0 Z20.0; . . . . . ①
G42 G01 Z2.0 F_ ; . . . . . ②
X_ Z_ ; . . . . . ③

Ex. 3

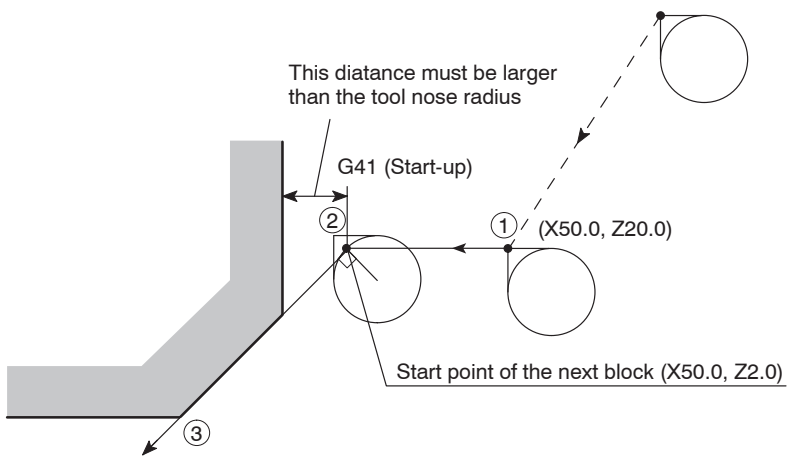

⋮
G00 X50.0 Z20.0; . . . . . ①
G41 G01 Z2.0 F_ ; . . . . . ②
X_ Z_ ; . . . . . ③
⋮

NOTE When specifying the start-up, the following two conditions must be satisfied.

① The start-up block must include an axis movement command; the called distance must be larger than the offset amount (tool nose radius).

② The start-up must be specified in the G00 or G01 (linear motion) mode.

Do not specify the start-up in the G02 or G03 mode. If the start-up is specified in such a mode, an alarm is generated, the corresponding alarm message (No. 034) is displayed on the screen and the machine stops operating.

3.2 Offset Mode

The mode in which the automatic tool nose radius offset function is valid, after the start-up, is called the offset mode.

1) Behavior when the direction of tool offset (right, left) is not changed

The tool moves along the workpiece shape with its nose in contact with the shape.

Ex. 1

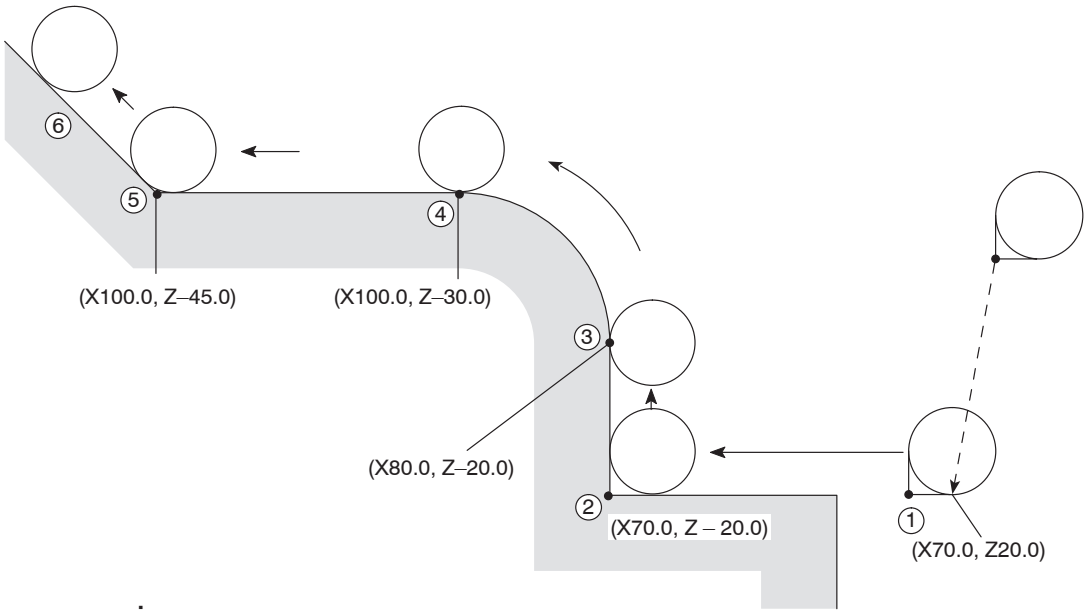

⋮

G42 G00 X70.0 Z20.0; ..... ① (Start-up)
G01 Z–20.0 F_ ; ..... ②
X80.0; ..... ③
G03 X100.0 Z–30.0 R10.0; ..... ④ Offset mode
G01 Z–45.0; ..... ⑤
X_ Z_ ; ..... ⑥

2) Behavior when the direction of tool offset (right, left) is changed

If the direction of tool offset changes in a program, i.e., if the G code calling the tool nose radius offset function changes between G41 and G42, the tool nose will come into contact with the workpiece shape that is defined in the two consecutive blocks where the G code changes from G41 to G42, or vice versa.

Ex. 2

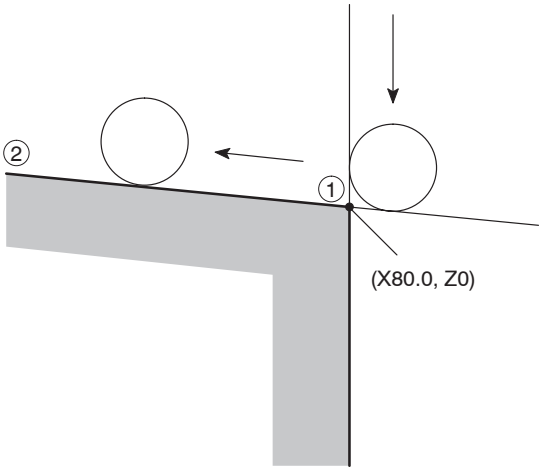

⋮

G41 X90.0 Z0;

X80.0; . . . . . ①

G42 X_ Z_ ; . . . . . ②

⋮

CAUTION

Changing the G code mode between G41 and G42 must not be specified in the block following the start-up block.

3.3 Cancel Mode

The G40 command, specified in the offset mode, cancels the tool nose radius offset function.

The cancel mode starts from the end point of the block that precedes the G40 block. The center of the tool nose lies at right angles to the tool path programmed in reference to block.

Ex. 1

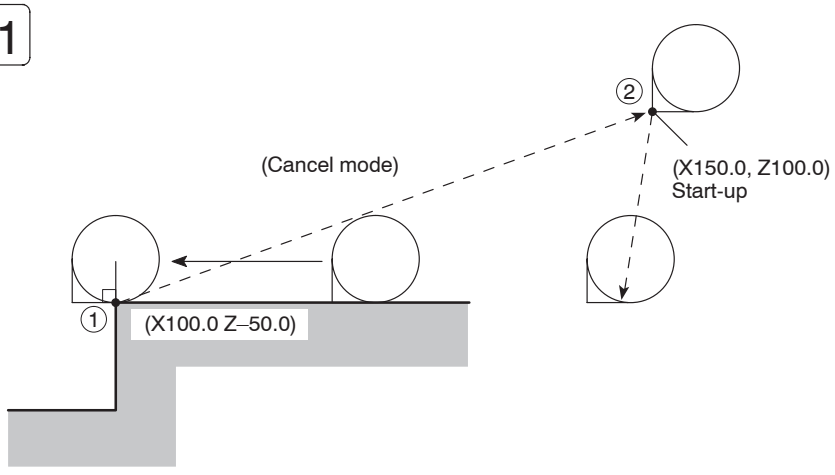

⋮

(G42) X100.0 Z–50.0; . . . . . ①

G40 G00 X150.0 Z100.0; . . . . . ② (Cancel mode)

⋮

Ex. 2

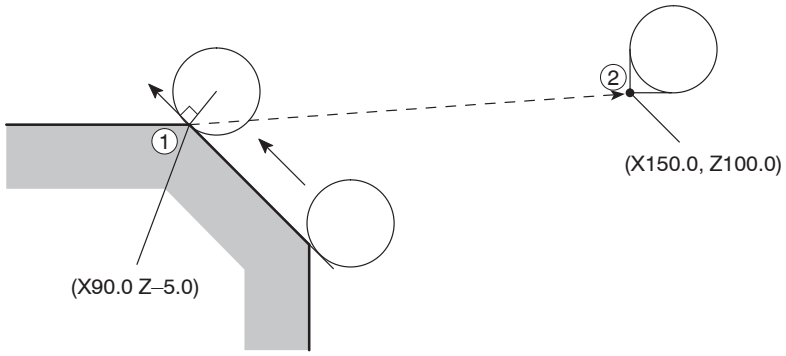

⋮

(G42) X90.0 Z–5.0; . . . . . ①

G40 G00 X150.0 Z100.0; . . . . . ②

⋮

NOTE Pay careful attention on the following points in the cancel mode program.

① In the automatic tool nose radius offset mode (G41, G42), do not specify the same G code that has been specified to call the present offset mode again. If the same G code is specified, positioning is made so that the tool nose lies at the right angle to the tool path at the end point of the preceding block, in the same manner as in the cancel block. Therefore, undercuts or overcuts occur in the block in which the same G code (G41, G42) as the one presently valid is specified.

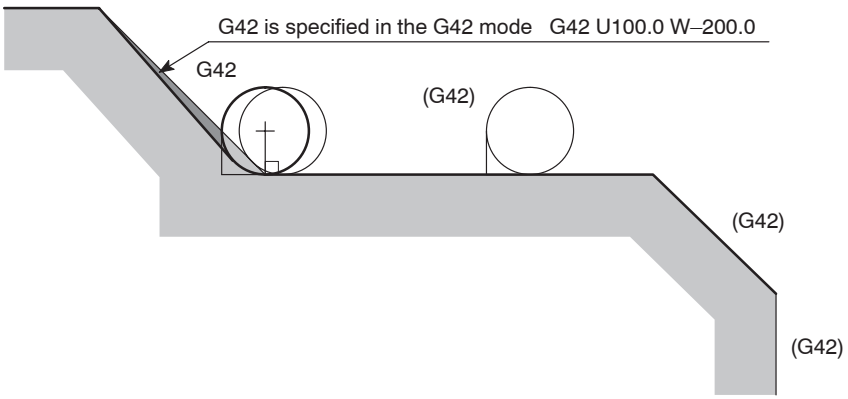

② The cancel block must be specified in the G00 or G01 (linear motion) mode. To specify the cancel block in the G02 or G03 circular interpolation mode is not allowed. If the cancel block is specified in the circular interpolation mode, an alarm message (No. 034) is displayed on the screen and the machine stops.

NOTE Conditions in which the offset mode is canceled:

- Execution of the G40 command
- The initial state established when the power is turned on.
- Reset state; the RESET (RESET) key is pressed.
- Program end; the program ends when the M02 or M30 command is executed.

4. General Cautions on the Automatic Tool Nose Radius Offset Function

4.1 If a Wall Lies at the End of Cutting

If the workpiece wall lies in a direction independent of the direction of tool motion specified by the commands in the G40 block:

Specify the workpiece wall's direction (workpiece shape) with vectors (I, K). Use incremental values for I and K commands; the I command should be specified in radius.

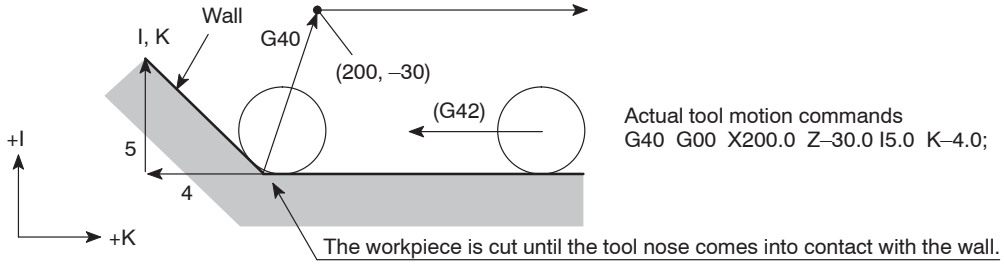

① The workpiece is cut until the tool nose comes into contact with the wall. The I and K commands, used to define the vectors that represent the workpiece wall direction, should be specified in the G40 block that appears first after entry into the offset mode.

- Valid

```
G42 X_ Z_ ;
X_ Z_ ;
    ⋮
    ⋮
    ⋮    Offset mode
    ⋮
    ⋮
    ⋮
G40 G00 X_ Z_ I_ K_ ;
```

- Invalid

```
G42 X_ Z_ ;
    ⋮
    ⋮    Offset mode
    ⋮
G40 X_ Z_ ;
    ⋮
    ⋮    Cancel mode
    ⋮
G40 G00 X_ Z_ I_ K_ ;
                Ignored
```

② If "I_ K_ " is not specified in the G40 block, the offset mode cancel point is set at the end point of the preceding block; at this end point, the tool nose center lies at right angles to the tool path generated by the commands in reference to block. This causes an overcut on the wall.

G40 G00 X_ Z_ ;

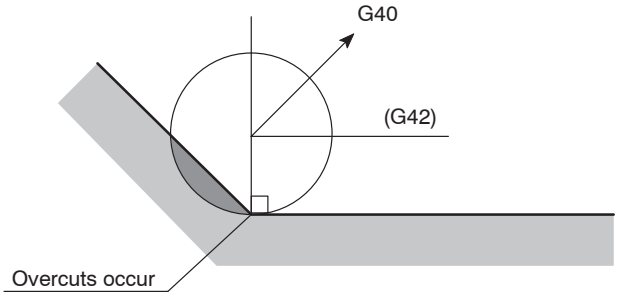

Ex. **Calculating the wall direction (blank workpiece shape)**

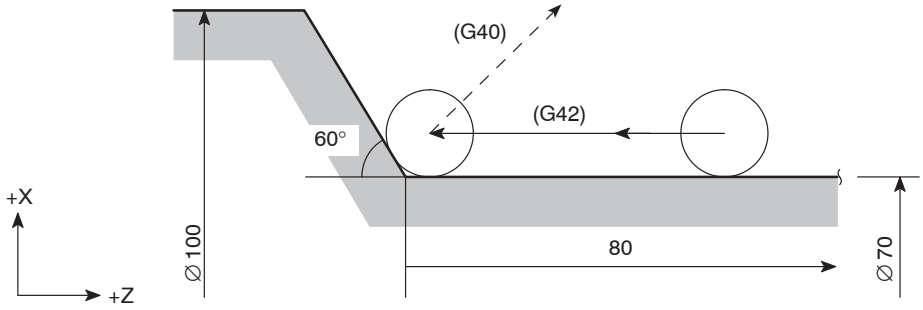

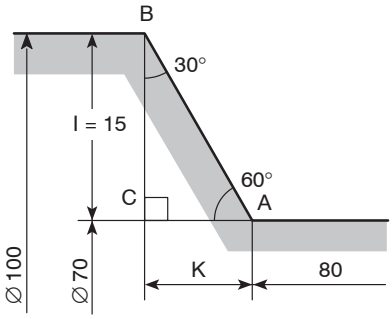

① Value “I” is calculated as indicated below, based on the illustration on the left.

$$I = \frac{100 - 70}{2} = 15$$

Because it is measured in the positive direction on the X-axis, the designation should be “I15.0”.

Next, value “K” is calculated as:

$K = AC = 15 \times \tan 30^\circ = 8.660$

Because it is measured in the negative direction on the Z-axis, the designation should be “K–8.66”.

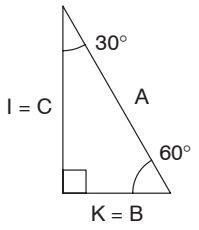

② Since I and K commands are used to define the direction of the wall, the ratio between the sides of a triangle may be used instead of calculating actual lengths.

The ratio of three sides of the triangle given on the left is known as:

$A:B:C = 2:1:\sqrt{3}$ (= 1.73)

Therefore, the designation should be “I1.73, K–1.0”.

I and K commands may be specified in either method as described above.

```
      ⋮
G01  Z–80.0;
G40  G00  X200.0  Z50.0  I15.0  K–8.66;
                         (I1.73  K–1.0)
                         Interchangeable
```

Ex.

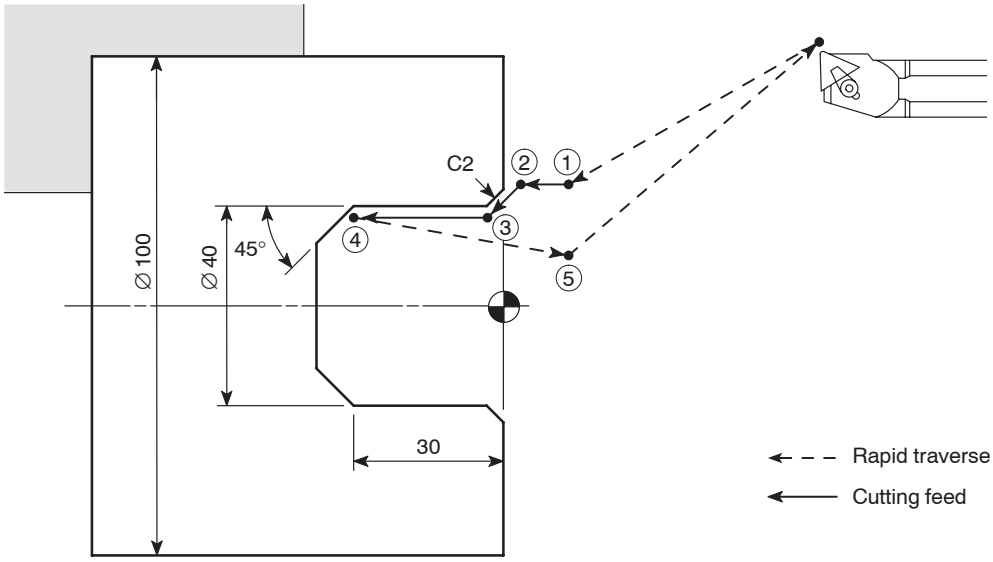

O0001;
N1;
G50 S2000;
G00 T0101;
G96 S180 M03;
X46.0 Z20.0 M08; . . . . . ①
G41 G01 Z1.0 F1.0; . . . . . Approach to ② (start-up)
X40.0 Z–2.0 F0.15; . . . . . ③
Z–30.0; . . . . . ④ — Offset mode
G40 G00 U–1.0 Z20.0 I–1.0 K–1.0; . . Escape (cancel mode)
X150.0 Z100.0 M09;
M01;

I–1.0 . . . . . Specifies X component of the vector (–1 mm in the X-axis direction; in radius)

K–1.0 . . . . Specifies Z component of the vector (–1 mm in the Z-axis direction)

The I and K commands indicate the wall direction.

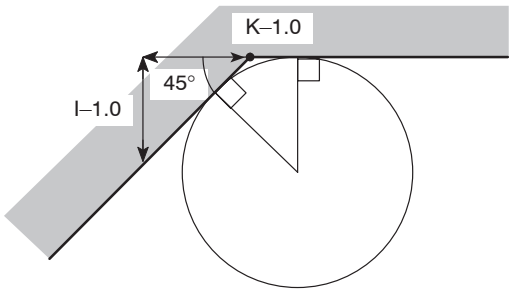

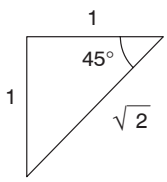

4.2 Overcut in the Automatic Tool Nose Radius Offset Mode

1) Cutting an inside an arc whose radius is smaller than the tool nose radius

   If cutting an inside arc whose radius is smaller than the tool nose radius is called in a program, overcuts will occur.

   The alarm indicator is displayed on the screen just after the start of the block that precedes that block containing the arc command and the machine stops.

   Just after the completion of corner interpolation motion if motion for corner interpolation was generated.

NOTE If a single block function is called during the execution of the preceding block, the axes are fed to the end point of that block, causing overcuts.

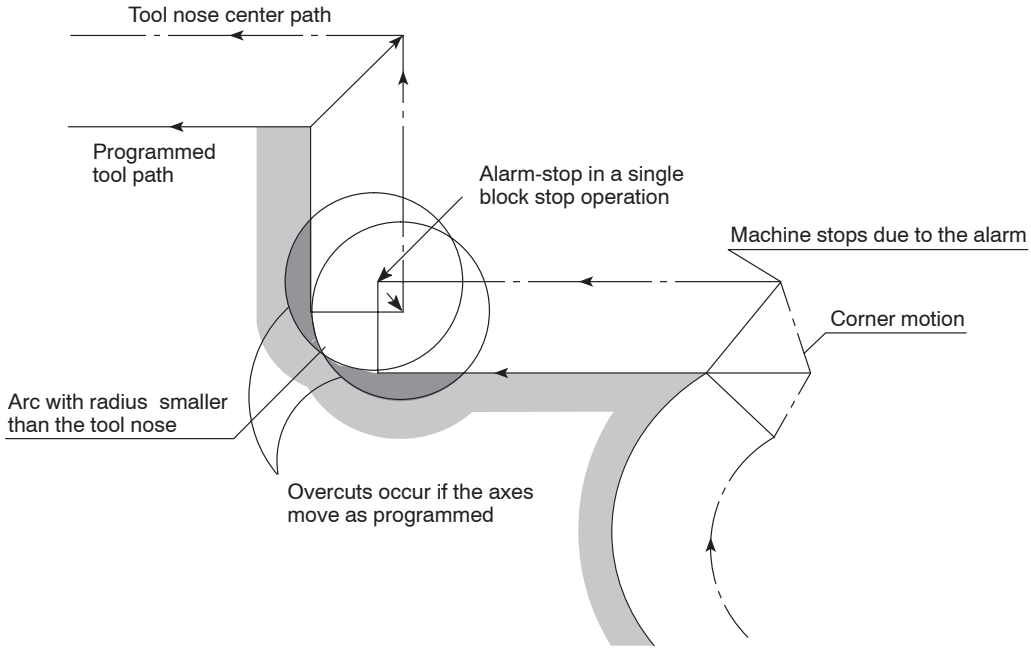

2) Cutting a groove whose width is narrower than the width of tool nose

Since overcuts occur if the tool nose radius center path is generated in the direction opposite to the path specified in the program as the result of automatic tool nose radius offset, an alarm occurs just after the start of the block that precedes the one causing overcuts. The corresponding alarm number is displayed and the machine stops.

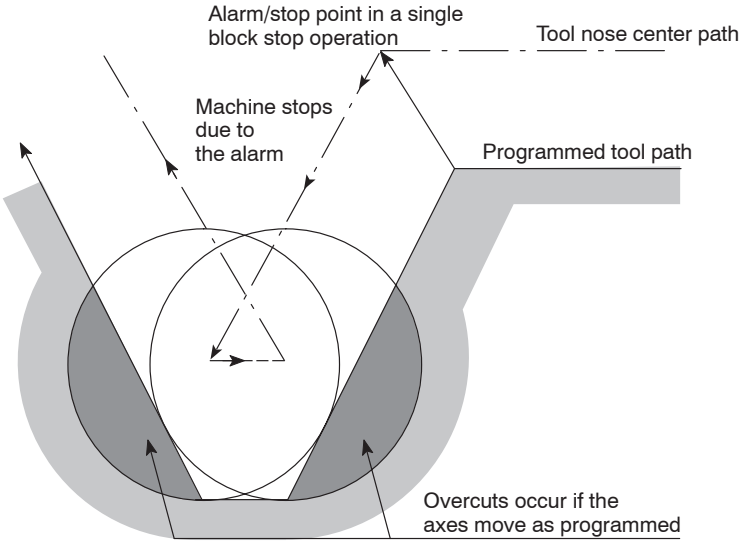

3) Cutting an arc-shaped step whose height is smaller than the tool nose radius

If cutting an arc-shaped step whose height is smaller than the tool nose is called in a program, the tool nose center path generated by the tool nose radius offset might cause axis motion in the direction opposite to the programmed tool path direction.

In such a case, the first vector is ignored and the tool moves along the straight line to the tip point of the second vector.

Although the operation is continued without causing an alarm, undercut portion is left in the workpiece.

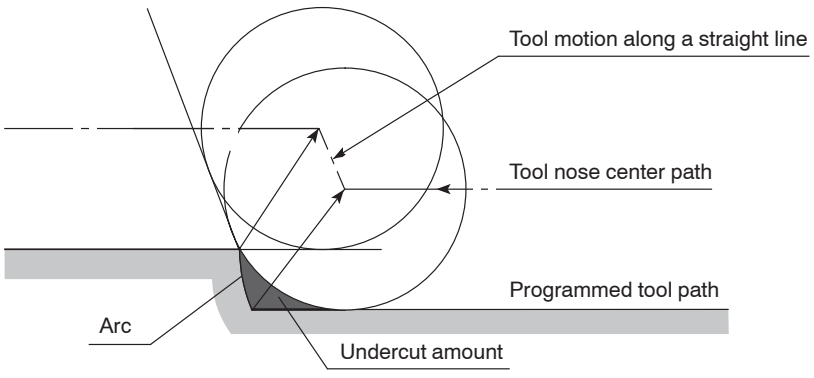

4) No axis motion commands being specified in two or more consecutive blocks:

If no axis motion commands are specified in two or more consecutive blocks while in the offset mode, overcuts could occur as indicated below since buffering of two blocks is not possible.

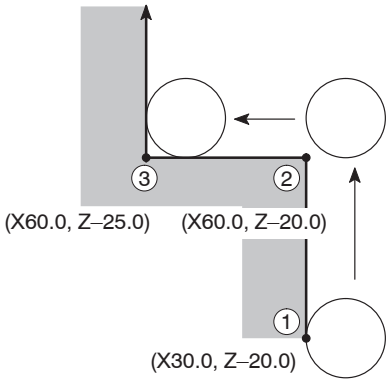

⋮
(G42 mode)
X30.0 Z–20.0; . . . . . ①
X60.0; . . . . . ②
Z–25.0; . . . . . ③
⋮

Tool paths are offset correctly due to the 2-block buffering function.

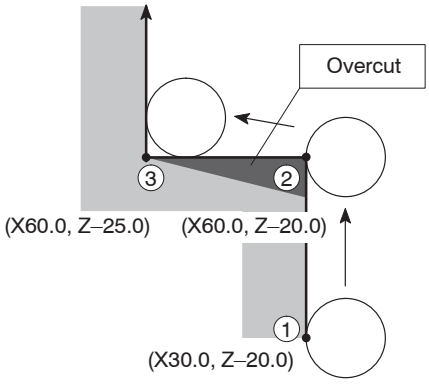

⋮
(G42 mode)
X30.0 Z–20.0; . . . . . ①
X60.0; . . . . . ②
M_ ;
S_ ;
No axis movement commands in these blocks
Z–25.0; . . . . . ③
⋮

Overcuts occur as illustrated above. This is because the center of the tool nose is positioned, when the preceding block ② is executed, at the right angle to the tool path called by the commands in reference to this block.

5. Example Programs

Examples of programs that use the automatic tool nose radius offset (G40, G41, G42) are indicated below.

Refer to these examples when creating a program.

5.1 Basic Programs

Ex. **O.D. cutting with an O.D. cutting tool**

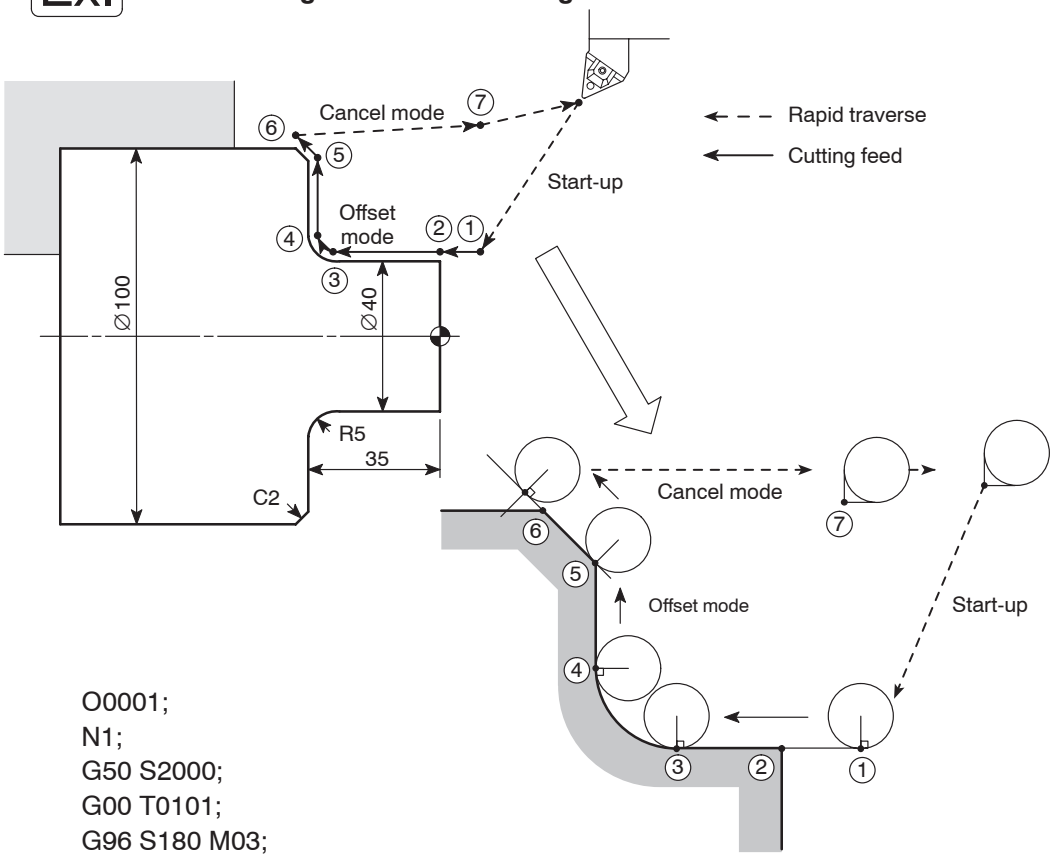

O0001;
N1;
G50 S2000;
G00 T0101;
G96 S180 M03;
G42 X40.0 Z20.0 M08; ..... Positioning at ① (X40.0, Z20.0) at a rapid traverse rate
Since the block contains G42, this is the start-up block.
The tool is offset to the right in reference to the direction the cutting tool will advance.
G01 Z2.0 F1.0; ..... Cutting to ② at feedrate of 1.0 mm/rev
Z–30.0 F0.15; ..... Cutting to ③ at feedrate of 0.15 mm/rev
G02 X50.0 Z–35.0 R5.0; ..... Cutting to ④ along a circle of 5 mm radius in the clockwise direction
G01 X96.0; ..... Cutting to ⑤ along a straight line
X102.0 Z–38.0; ..... Cutting to ⑥ to allow the cutting tool to be completely off the workpiece
G40 G00 Z20.0; ..... Positioning at ⑦ at a rapid traverse rate to retract cutting tool from the workpiece
Since the block contains G40, this block cancels the offset mode.
X150.0 Z100.0 M09;
M01;

Ex. **Facing and O.D. cutting with in O.D. cutting tool**

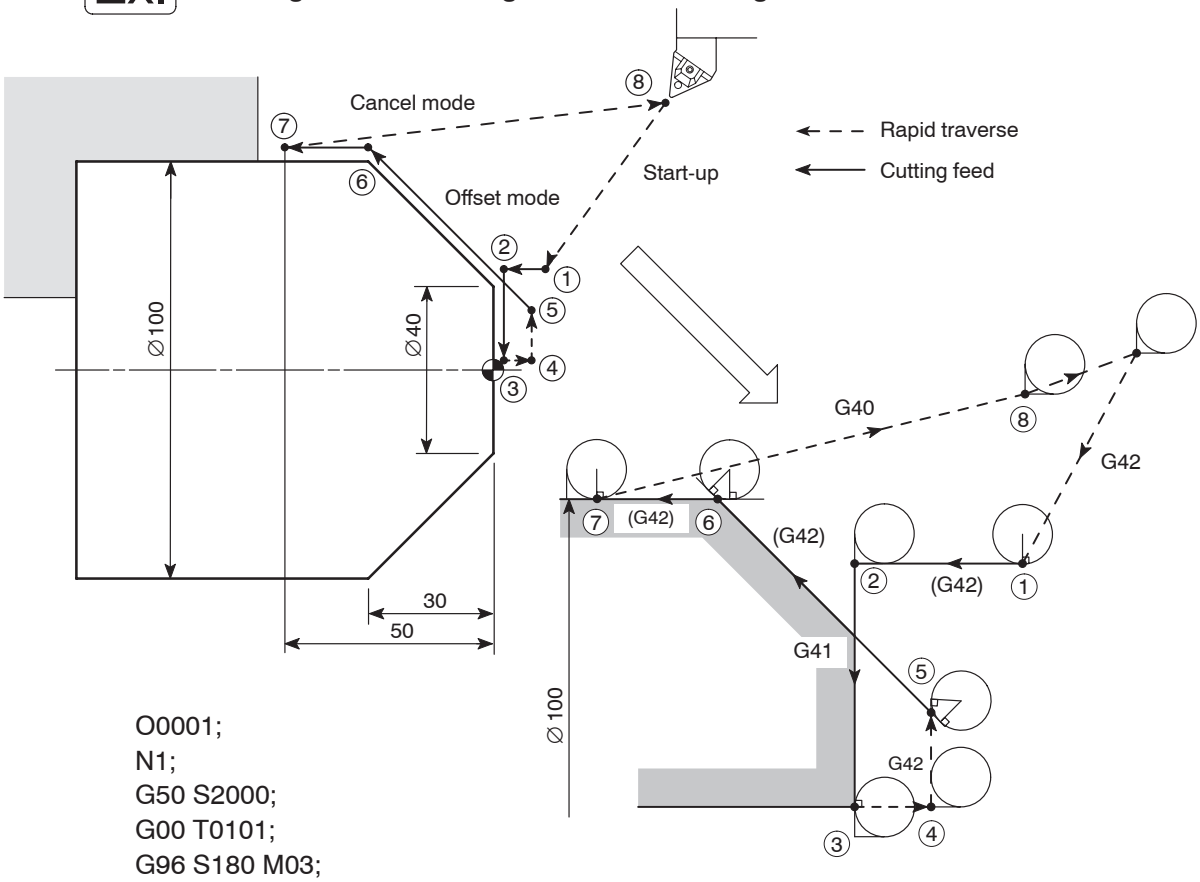

O0001;
N1;
G50 S2000;
G00 T0101;
G96 S180 M03;

(1) **G42 X45.0 Z20.0 M08;** . . . . . Positioning at ① (X45.0, Z20.0) at a rapid traverse rate
Since the block contains G42, this is the start-up block.
The tool is offset to the right in reference to the direction the cutting tool will advance.

(2) G01 Z0 F1.0; . . . . . Cutting to ② at feedrate of 1.0 mm/rev

(3) **G41 X0 F0.15;** . . . . . Cutting to ③ at feedrate of 0.15 mm/rev
Since the block contains G41, the cutting tool moves up to the position where the tool position is offset to the left.

G40 G00 W1.0; . . . . . Positioning at ④ at a rapid traverse rate
Since the block contains G40, this block cancels the offset mode.

G42 X38.0; . . . . . Positioning at ⑤ at a rapid traverse rate
Since the block contains G42, the cutting tool moves up to the position where the tool position is offset to the right.

G01 X100.0 Z–30.0; . . . . . Cutting to ⑥ at a feedrate of 0.15 mm/rev

Z–50.0; . . . . . Cutting to ⑦ along a straight line

G40 G00 U1.0 Z20.0; . . . . . Positioning at ⑧ at a rapid traverse rate to retract cutting tool from the workpiece
Since the block contains G40, this block cancels the offset mode.

X150.0 Z100.0 M09;
M01;

Blocks (1), (2), and (3) may be specified as indicated below.

(1) X45.0 Z20.0; . . . . . Positioning at ① (X45.0, Z20.0) at a rapid traverse rate

(2) G41 G01 Z0 F1.0; . . Cutting to ② at feedrate of 1.0 mm/rev

Since the block contains G41, this is the start-up block.

The tool is offset to the left in reference to the direction the cutting tool will advance.

(3) X0 F0.15; . . . . . Cutting to ③ at feedrate of 0.15 mm/rev

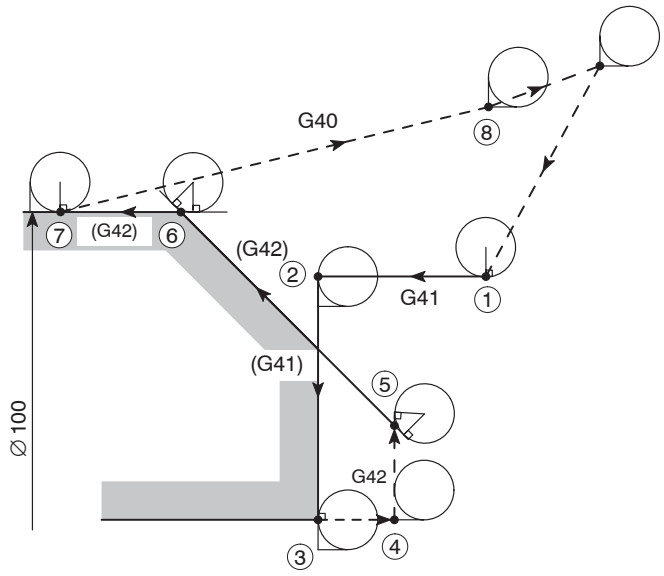

The tool paths for these blocks are shown in the illustration above.

NOTE In this program, although block (2) specifies only Z-axis movement, the X-axis also moves since this is the start-up block.

Here, the X-axis moves in the negative direction by the tool nose radius. Therefore, specify the X coordinate value in block (1) so that interference can be avoided.

Ex. **Chamfering and I.D. cutting with an I.D. cutting tool**

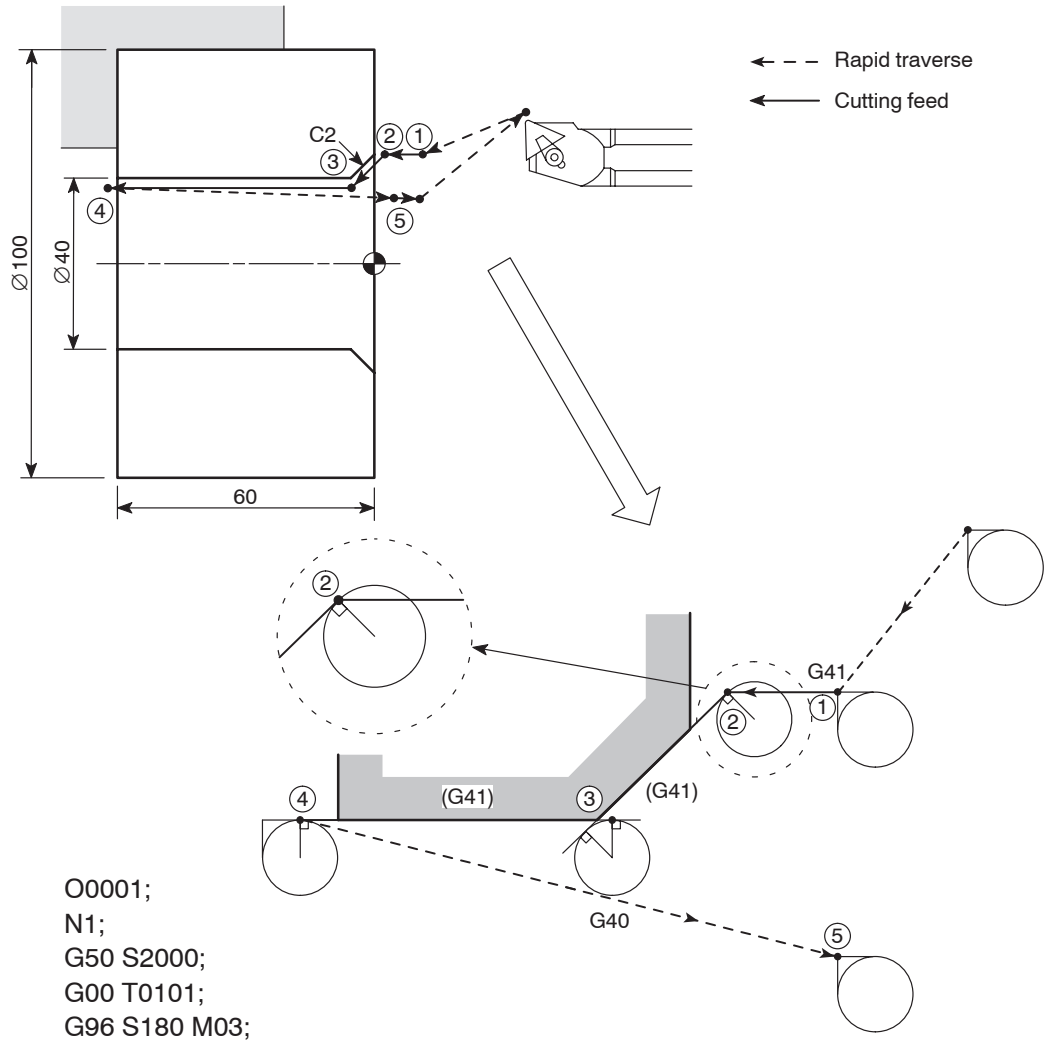

O0001;
N1;
G50 S2000;
G00 T0101;
G96 S180 M03;
X48.0 Z20.0 M08; . . . . . Positioning at ① (X48.0, Z20.0) at a rapid traverse rate
G41 G01 Z2.0 F1.0; . . . . . Moving to ②, including offset motion to the left in reference to the direction the cutting tool will advance
Since the block contains G41, this is the start-up block.

NOTE The tool moves in the X-axis direction also since the tool is offset to the left at ②.

X40.0 Z–2.0 F0.15; . . . . . ③
Z–62.0; . . . . . ④ — Offset mode
G40 G00 U–1.0 Z20.0; . . . . . Positioning at ⑤ at a rapid traverse rate to retract cutting tool from the workpiece
Since the block contains G40, this block cancels the offset mode.
At the start point of the cancel mode, the center of the nose circle is positioned right angle to the programmed path in reference to the block at the end point ④ of the preceding block.

X150.0 Z100.0 M09;
M01;

Ex. **Arc → O.D. → Arc cutting with an O.D. cutting tool**

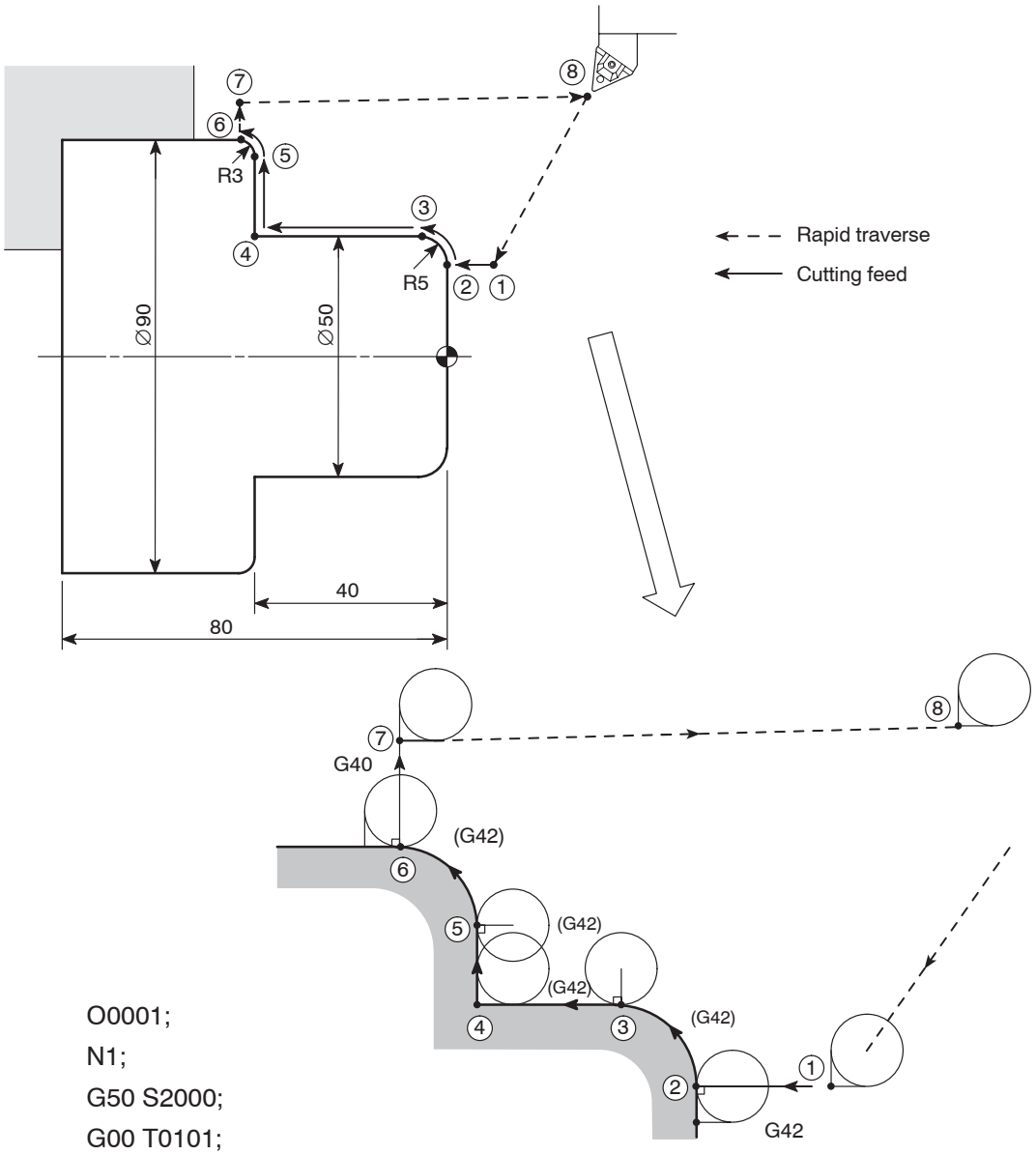

O0001;
N1;
G50 S2000;
G00 T0101;
G96 S180 M03;

(1) X40.0 Z20.0 M08; . . . . . Positioning at ① (X40.0, Z20.0) at a rapid traverse rate

G42 G01 Z0 F0.15; . . . . . Moving to ②, including offset motion to the right in reference to the direction the cutting tool will advance

Since the block contains G42, this is the start-up block.

NOTE The tool moves in the X-axis direction also since the tool is offset to the right at ②.

G03 X50.0 Z–5.0 R5.0; . . . . . ③
G01 Z–40.0; . . . . . ④
X84.0; . . . . . ⑤
G03 X90.0 Z–43.0 R3.0; . . . . . ⑥

Offset mode

G40 G00 X100.0; . . . . . Positioning at ⑦ at a rapid traverse rate to retract cutting tool from the workpiece

Since the block contains G40, this block cancels the offset mode.

At the start point of the cancel mode, the center of the nose circle is positioned right angle to the programmed path in reference to the block (③ → ⑥) at the end point ⑥ of the preceding block.

(2) X150.0 Z100.0 M09; . . . . . Moving to ⑧ at a rapid traverse rate
M01;

If the profile begins with an arc, as in this example, the block preceding the block that defines the arc should be used as the start-up block.

Similarly, if the profile ends with an arc, the block where the arc is defined should be used as the cancel mode block.

NOTE If start-up or cancel of the tool nose radius offset mode is specified in a wrong block, it will cause undercutting.

Examples of this undercut are shown below.

If the G42 command is specified in block (1), an undercut portion will be left.

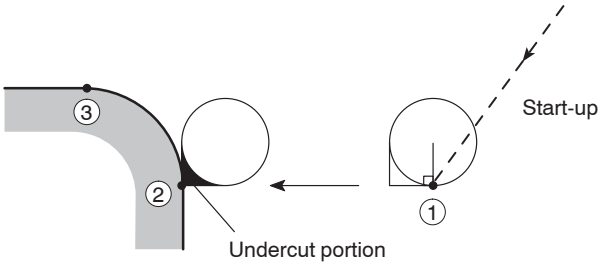

If the G40 command is specified in block (2), an undercut portion will be left.

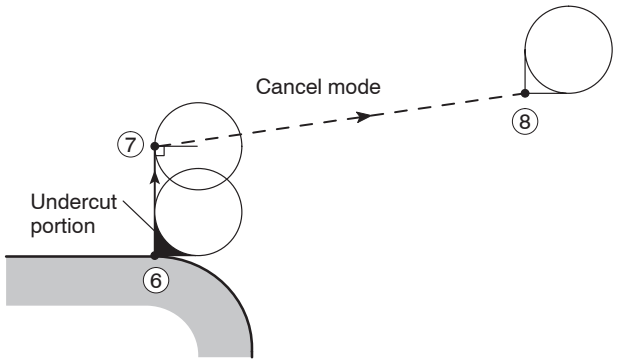

General start-up patterns are summarized below. Cautions to be taken into consideration when creating a program are specified for the related tool paths.

Ex. **Chuck work (1) (Tool nose radius: 0.4 mm)**

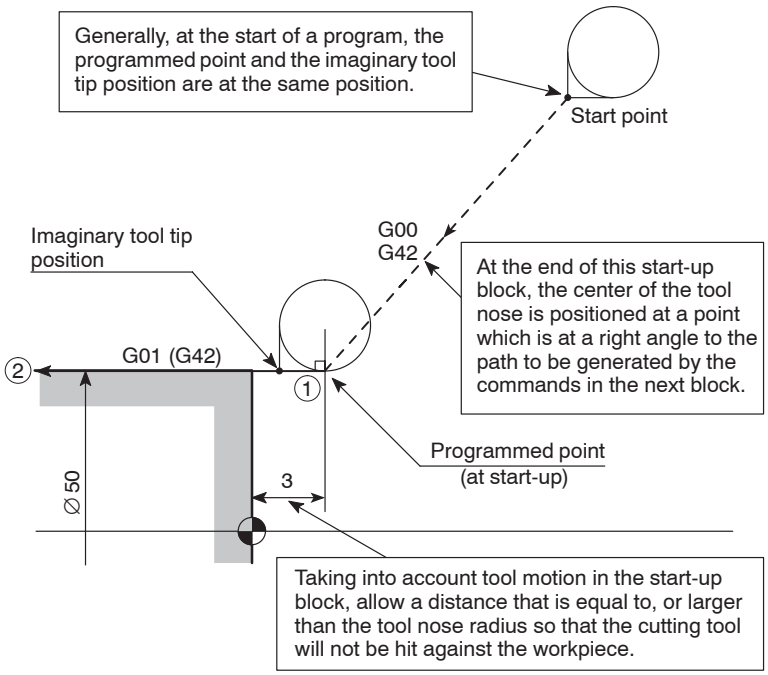


```
O0001;
N1;
G50 S2000;
G00 T0101;
G96 S150 M03;
G42 X50.0 Z3.0 M08; ..... ①
G01 Z–30.0 F0.15; ..... ②
    ⋮
```

Ex. **Chuck work (2) (Tool nose radius: 0.4 mm)**

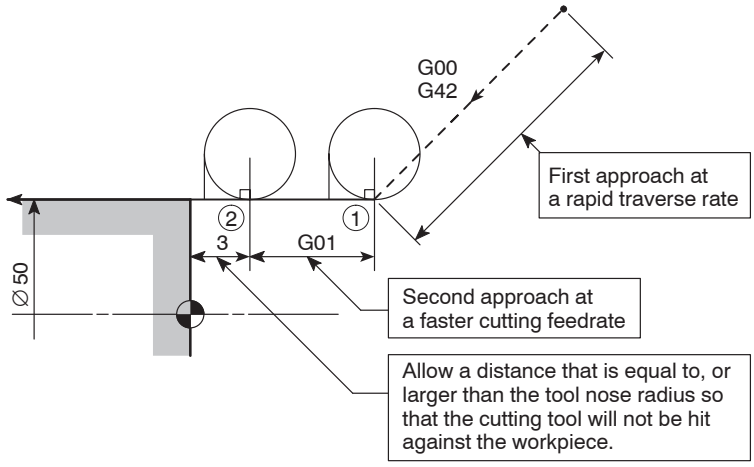


```
O0001;
N1;
G50 S2000;
G00 T0101;
G96 S150 M03;
G42 X50.0 Z20.0 M08; ..... ①
G01 Z3.0 F1.0 ..... ②
Z–30.0 F0.15;
    ⋮
```

Ex. **Center work (Tool nose radius: 0.4 mm)**

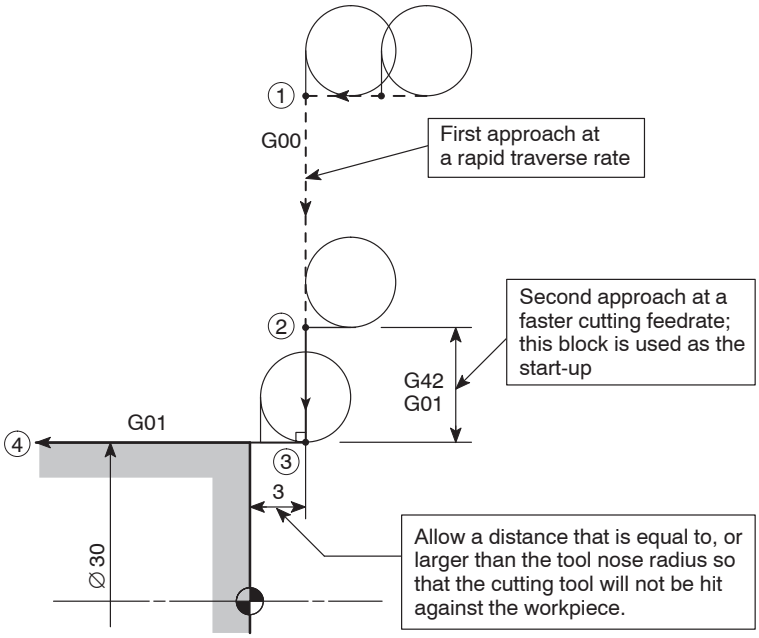


```
O0001;
N1;
G50 S2000;
G00 T0101;
G96 S150 M03;
Z3.0 M08; ..... ①
X50.0; ..... ②
G42 G01 X30.0 F1.0; ..... ③
Z–30.0 F0.15; ..... ④
    ⋮
```

Ex. **Facing (1) (Tool nose radius: 0.4 mm)**

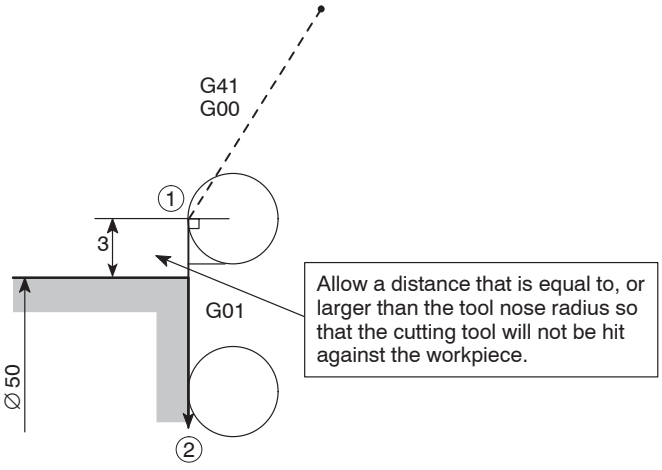


```
O0001;
N1;
G50 S2000;
G00 T0101;
G96 S150 M03;
G41 X56.0 Z0; ..... ①
G01 X20.0 F0.15; ..... ②
    ⋮
```

Ex. **Facing (2) (Tool nose radius: 0.4 mm)**

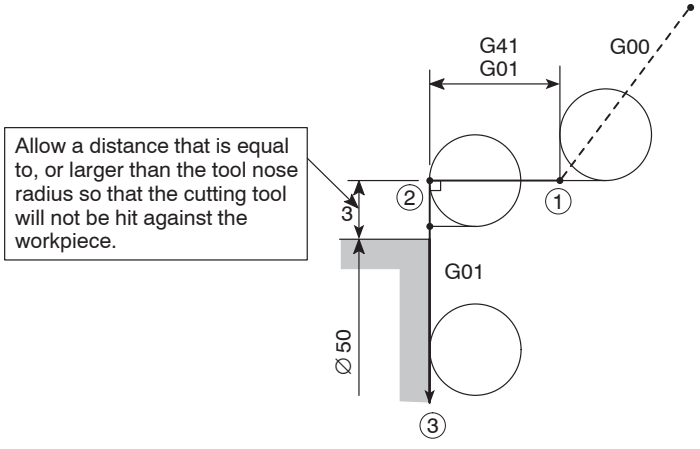


```
O0001;
N1;
G50 S2000;
G00 T0101;
G96 S150 M03;
X56.0 Z20.0; ..... ①
G41 G01 Z0 F1.0; ..... ②
X30.0 F0.15; ..... ③
```

Ex. **Facing (3) (Tool nose radius: 0.4 mm)**

NOTE In this example, positioning in the start-up block requires corner interpolation motion.

The program should use the G41 command, instead of the G42 command used in “Chuck work (1) (Tool nose radius: 0.4 mm).”

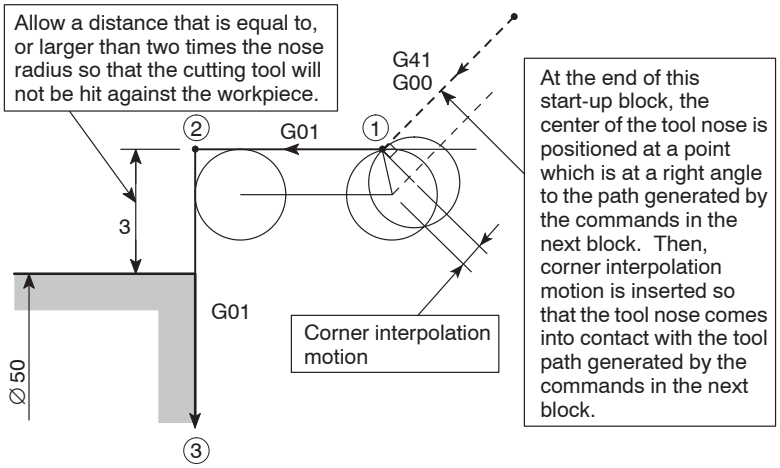


```
O0001;
N1;
G50 S2000;
G00 T0101;
G96 S150 M03;
G41 X56.0 Z20.0 M08; ..... ①
G01 Z0 F1.0; ..... ②
X30.0 F0.15; ..... ③
    ⋮
```

Ex. **Chamfering (1) (Tool nose radius: 0.4 mm)**

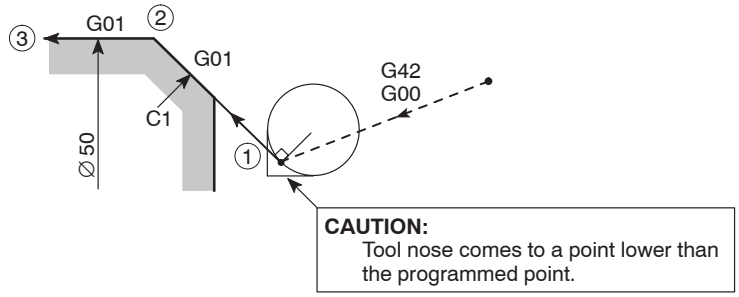


```
O0001;
N1;
G50 S2000;
G00 T0101;
G96 S150 M03;
G42 X46.0 Z1.0; ..... ①
G01 X50.0 Z–1.0 F0.15; ..... ②
Z–30.0; ..... ③
    ⋮
```

Ex. **Chamfering (2) (Tool nose radius: 0.4 mm)**

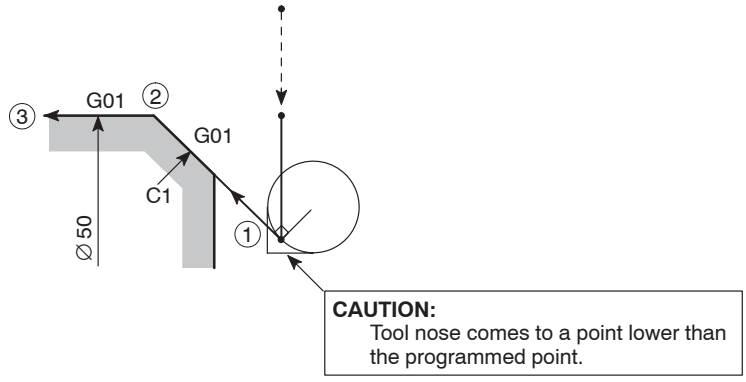


```
O0001;
N1;
G50 S2000;
G00 T0101;
G96 S150 M03;
X60.0 Z1.0;
G42 G01 X46.0 F1.0; ..... ①
X50.0 Z–1.0 F0.15; ..... ②
Z–30.0; ..... ③
    ⋮
```

Ex. **Chamfering (3) (Tool nose radius: 0.4 mm)**

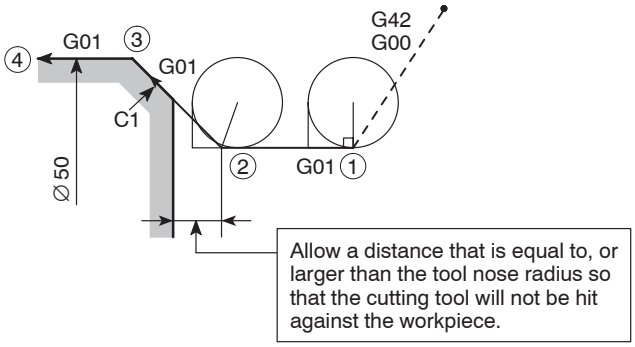


```
O0001;
N1;
G50 S2000;
G00 T0101;
G96 S150 M03;
G42 X46.0 Z20.0 M08; ..... ①
G01 Z1.0 F1.0; ..... ②
X50.0 Z–1.0 F0.15; ..... ③
Z–30.0; ..... ④
    ⋮
```

Ex. **Chamfering (4) (Tool nose radius: 0.4 mm)**

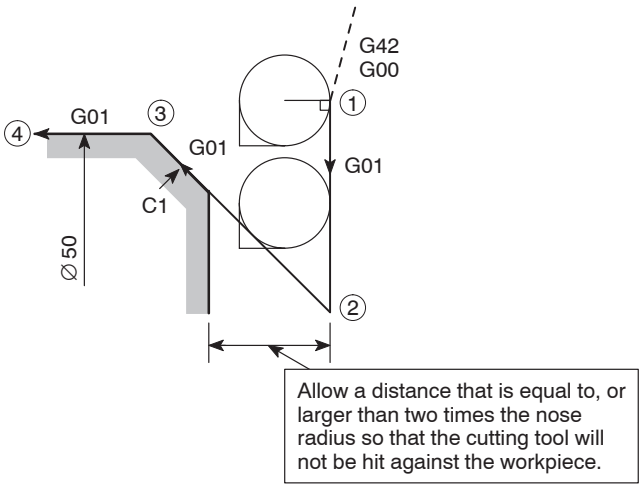


```
O0001;
N1;
G50 S2000;
G00 T0101;
G96 S150 M03;
G42 X60.0 Z2.0; ..... ①
G01 X44.0 F1.0; ..... ②
X50.0 Z–1.0 F0.15; ..... ③
Z–30.0; ..... ④
    ⋮
```

5.2 Recommended Example Programs

Ex. **Approach → O.D. cutting (Tool nose radius: 0.4 mm)**
Chuck work

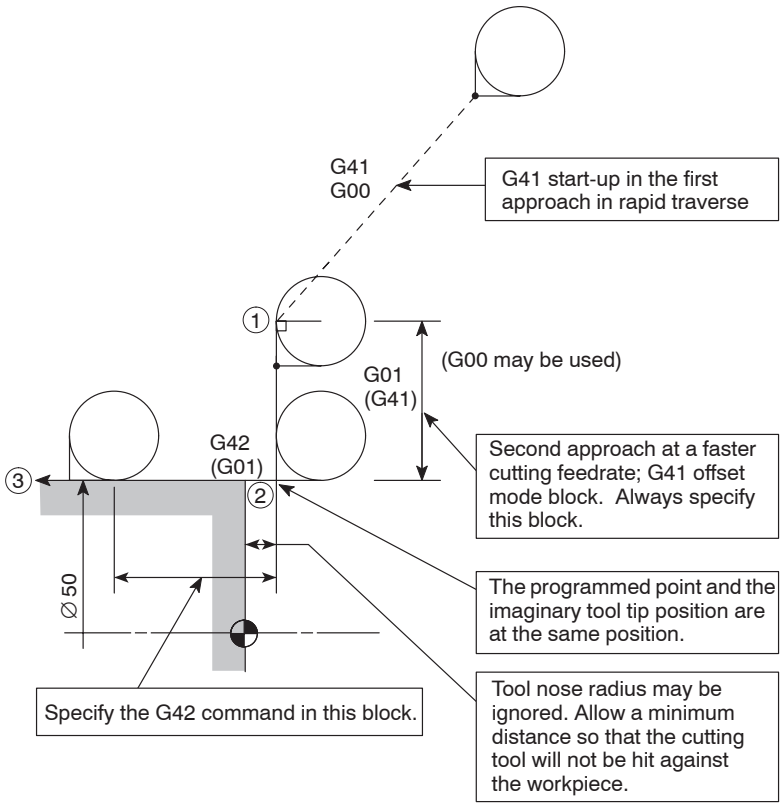


```
O0001;
N1;
G50 S2000;
G00 T0101;
G96 S150 M03;
G41 X70.0 Z1.0 M08; ..... ①
G01 X50.0 F1.0; ..... ②
G42 Z–30.0 F0.15; ..... ③
    ⋮
```

Ex. **Approach → Facing (Tool nose radius: 0.4 mm)**

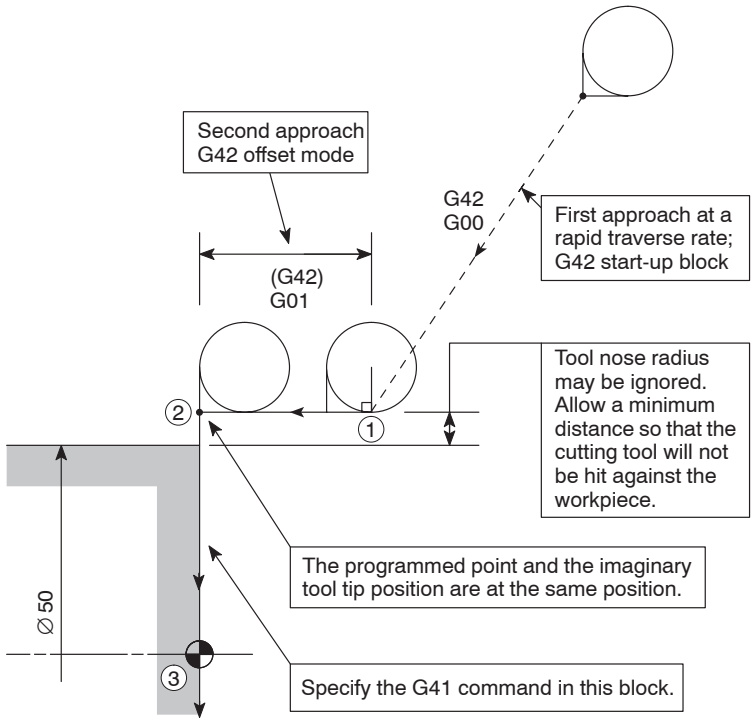


```
O0001;
N1;
G50 S2000;
G00 T0101;
G96 S150 M03;
G42 X52.0 Z20.0 M08; ..... ①
G01 Z0 F1.0; ..... ②
G41 X0 F0.15; ..... ③
G40 W1.0;
    ⋮
```

Ex. **Approach → Chamfering → O.D. cutting (Tool nose radius: 0.4 mm)**
Chuck work

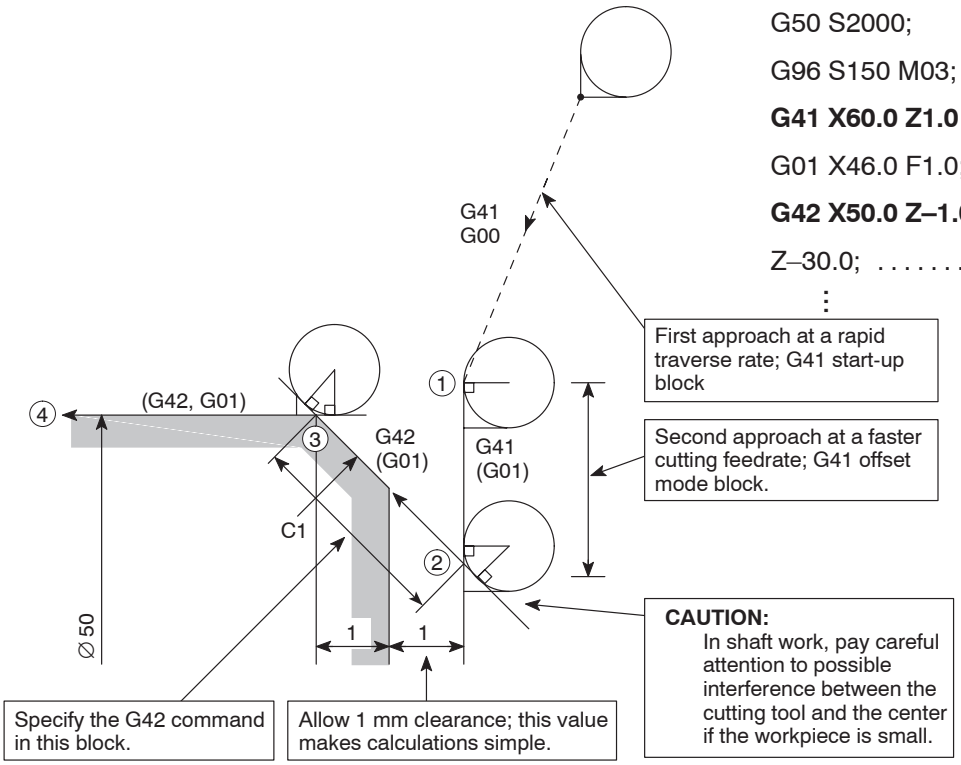


```
O0001;
N1;
G50 S2000;
G96 S150 M03;
G41 X60.0 Z1.0 M08; ..... ①
G01 X46.0 F1.0; ..... ②
G42 X50.0 Z–1.0 F0.15; ..... ③
Z–30.0; ..... ④
  ⋮
```

Ex. **Facing → Chamfering → O.D. cutting (Tool nose radius: 0.4 mm)**

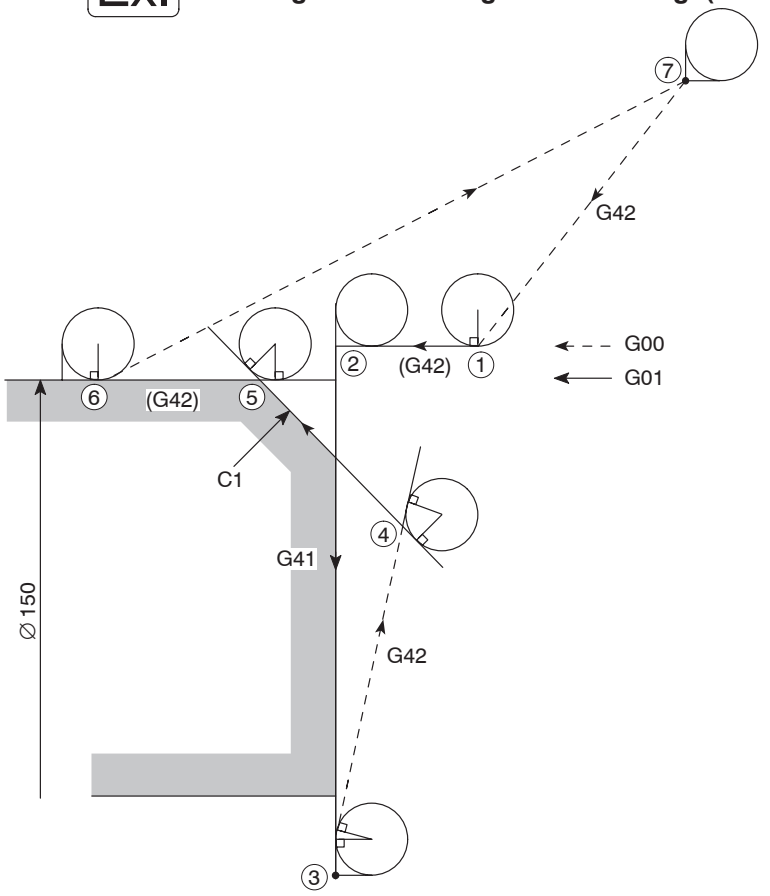


```
O0001;
N1;
G50 S2000;
G00 T0101;
G96 S150 M03;
G42 X152.0 Z20.0 M08; ..... ①
G01 Z0 F1.0; ..... ②
G41 X100.0 F0.15; ..... ③
G42 G00 X146.0 Z1.0; ..... ④
G01 X150.0 Z–1.0; ..... ⑤
Z–30.0; ..... ⑥
G40 G00 X200.0 Z30.0 M09; .. ⑦
M05;
M30;
```

Corner interpolation motion examples in automatic tool nose radius offset mode

NOTE The start point in the start-up motion varies depending on the imaginary tool tip position.

Programmed tool paths Actual tool paths (nose R center)

Corner Angle	Start-up (G40 → G42)	In the Same Offset Mode (G42)	Offset Mode Changed (G42 → G41)	Cancel Mode (G42 → G40)
1° - 90°	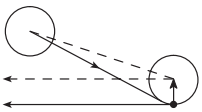	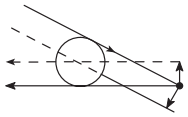	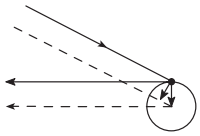	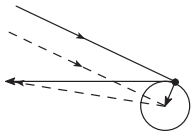
90°	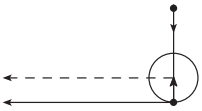	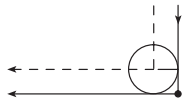	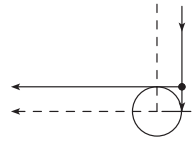	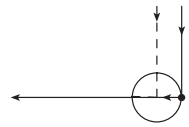
90° - 180°	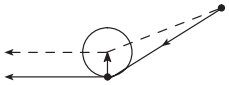	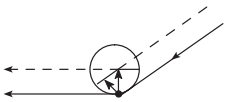	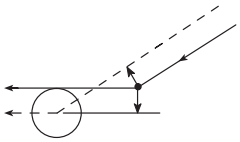	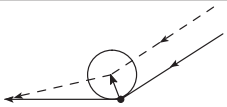
180°	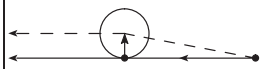	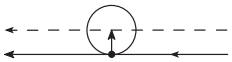	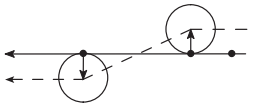	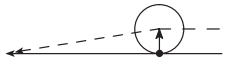
180° - 270°	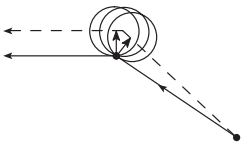	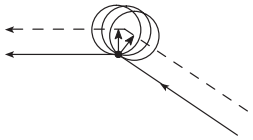	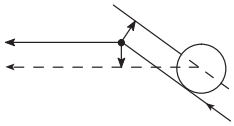	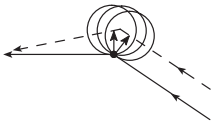
270°	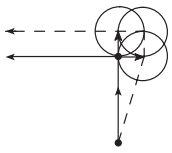	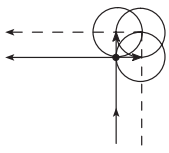	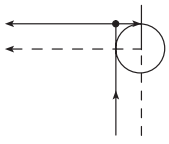	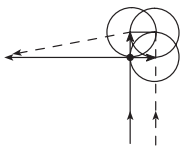
270° - 360°	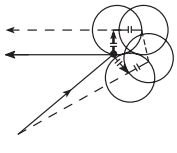	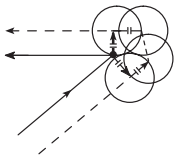	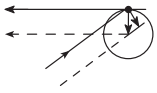	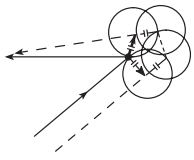
360° - (0°)	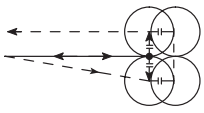	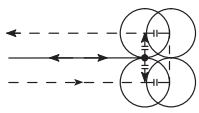	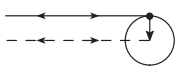	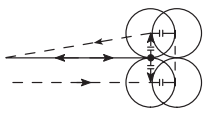
0° - 1°	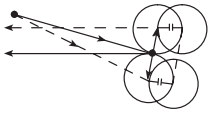	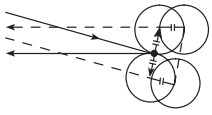	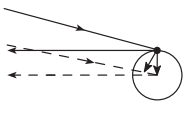	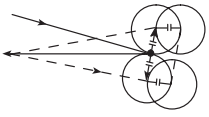

5.3 Programming for a Sample Workpiece

The part programs for the facing, O.D. finishing, and I.D. finishing are written for the sample workpiece illustrated below.

Compare the part program with the one created in 27., “Summary” of Chapter C.

<Drawing>

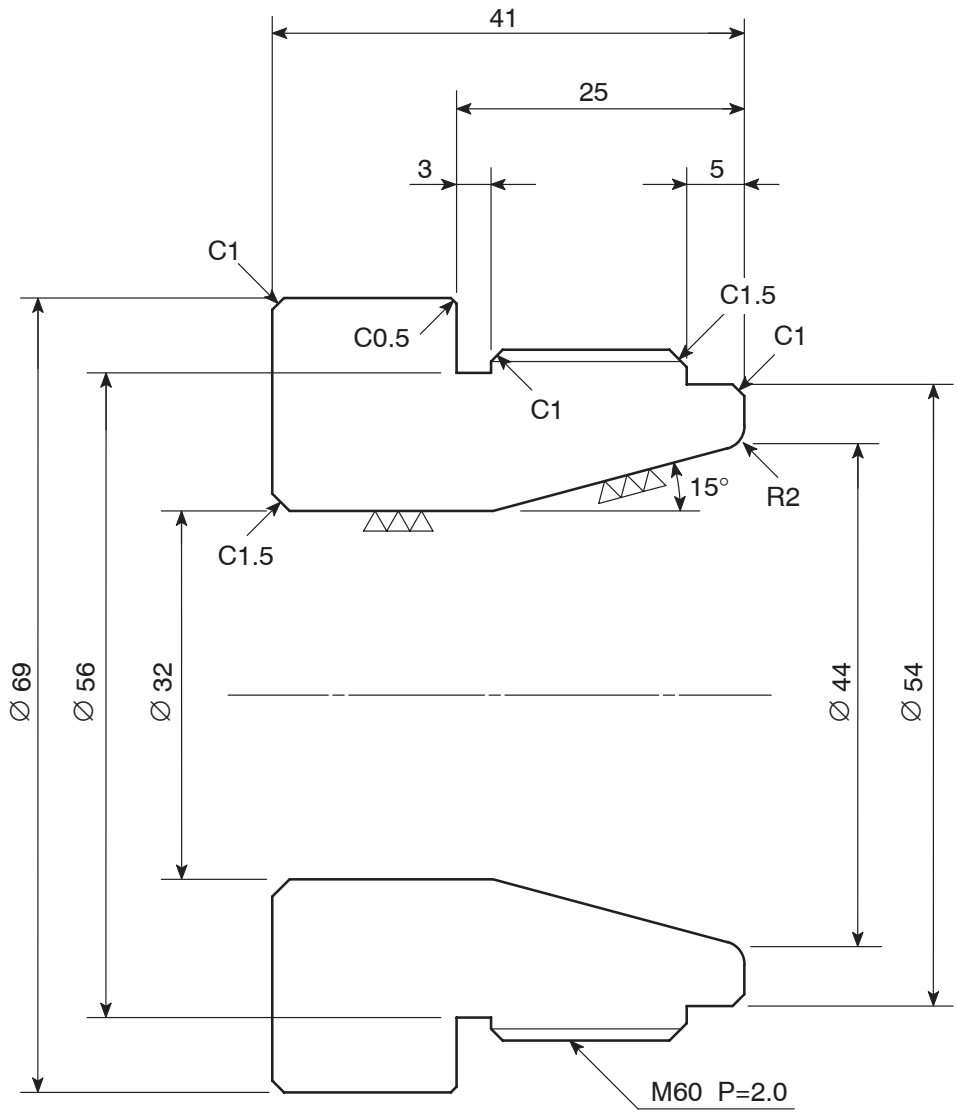

Finishing is ∇∇ unless otherwise specified.

<Dimensions of blank workpiece>

Blank Workpiece		Description
Material		AISI 1045 (Carbon steel)
Dimensions (mm)	O.D.	70
	I.D.	30
	Length	43

<Preparation for using the automatic tool nose radius offset function>

OFFSET / WEAR O0001 N00000

NO.	X	Z	R	T
W 01	0. 000	0. 000	0. 800	3
W 02	0. 000	0. 000	0. 800	2
W 03	0. 000	0. 000	0. 400	3
W 04	0. 000	0. 000	0. 400	2
W 05	0. 000	0. 000	0. 000	0
W 06	0. 000	0. 000	0. 000	0
W 07	0. 000	0. 000	0. 000	0
W 08	0. 000	0. 000	0. 000	0

ACTUAL POSITION (RELATIVE)
U 0.000 W 0.000

1) Set the imaginary tool tip position code to the T column in the OFFSET/WEAR screen.
2) Set the nose radius of the tool in the R column, corresponding to the offset number specified by the T code in either the OFFSET/GEOMETRY or OFFSET/WEAR screen.

NOTE If the nose radius is set to the R column in both of the OFFSET/GEOMETRY and OFFSET/WEAR screens, offset is made by both of the input data, causing excessive or insufficient cutting.

<Part programs for facing, O.D. finishing and I.D. finishing>

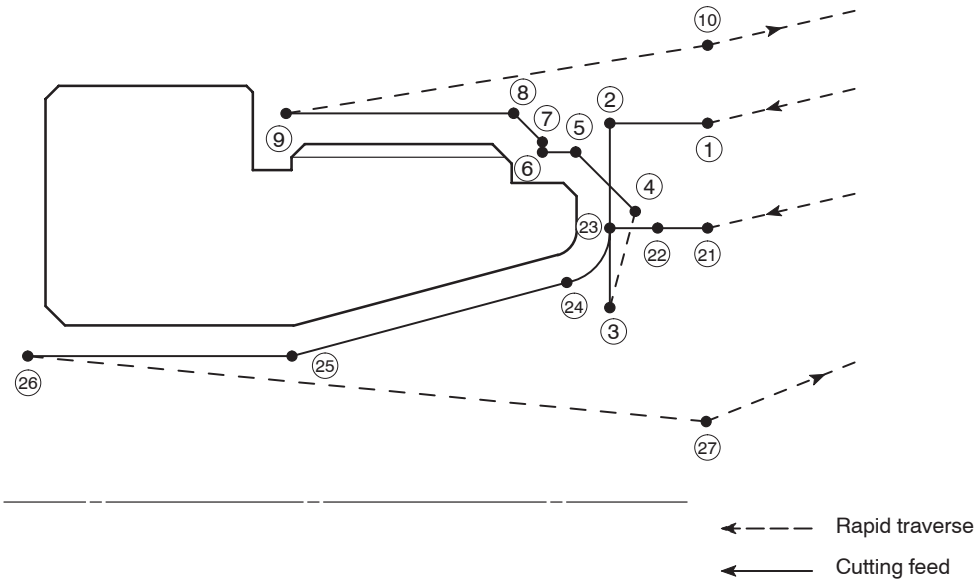

N3(FIN. OF. OUT.); . . . . . Part programs for finish facing and O.D. finishing (tool nose radius: 0.4 mm)

G50 S2000; . . . . . Setting the spindle speed limit for automatic operation at 2000 min^{-1}

G00 T0303 (M42)*; . . . . . Selecting the No. 3 tool

G96 S200 M03; . . . . . Starting the spindle or spindle 1 in the normal direction at the cutting speed of 200 m/min

① **G42 X56.0 Z20.0 M08;** . . . . . Moving to ①, including offset motion to the right in reference to the direction the cutting tool will advance (start-up motion)

② G01 Z0 F1.0;

③ **G41 X30.0 F0.15;** . . . . . Moving to the position where the offset is made to the left

④ **G42 G00 X50.0 W1.0;** . . . . . Moving to the position where the offset is made to the right

⑤ G01 X54.0 Z–1.0;

⑥ Z–5.0;

⑦ X56.8;

⑧ X59.8 Z–6.5;

⑨ Z–23.0 F0.2;

⑩ **G40 G00 U1.0 Z20.0;** . . . . . Moving to ⑩ at a rapid traverse rate to retract cutting tool from the workpiece (cancel mode)

X200.0 Z150.0; . . . . . Retracting cutting tool from the workpiece at a rapid traverse rate

M01; . . . . . If optional stop is valid:

The machine stops temporarily.

If optional stop is invalid:

The machine does not stop and the program is continuously executed.

N4(FIN. OF. IN.); . . . . . Part program for I.D. finishing (tool nose radius: 0.4 mm)

G50 S2000; . . . . . Setting the spindle speed limit for automatic operation at 2000 min^{-1}

G00 T0404 (M42)*; . . . . . Selecting the No. 4 tool

G96 S200 M03; . . . . . Starting the spindle or spindle 1 in the normal direction at the cutting speed of 200 m/min

㉑ **G41 X47.869 Z20.0 M08;** . . . . . Moving to ㉑, including offset motion to the left in reference to the direction the cutting tool will advance (start-up motion)

㉒ G01 Z1.0 F1.0;

㉓ Z0 F0.2;

㉓ X47.069; . . . . . No motion; since the X coordinate after automatic tool nose radius offset becomes the same value as in ㉑, the tool does not move.

㉔ G02 X43.205 Z–1.482 R2.0 F0.07;

㉕ G01 X32.0 Z–22.392;

㉖ Z–41.0 F0.1;

㉗ **G40 G00 U–1.0 Z20.0;** . . . . . Escape of cutting tool from the workpiece to execute I.D. cutting in the next process (cancel mode)

X200.0 Z150.0; . . . . . Retracting cutting tool from the workpiece at a rapid traverse rate

M01; . . . . . If optional stop is valid:

The machine stops temporarily.

If optional stop is invalid:

The machine does not stop and the program is continuously executed.

NOTE Commands in ( ) identified by "*" are used only for the machine equipped with a transmission.

CHAPTER F
MANUAL TOOL NOSE RADIUS OFFSET

This chapter describes how the manual tool nose radius offset function works.

Because the tool edge does not come to a sharp point, but is slightly rounded, the point of the tool nose actually engaged with cutting differs slightly from the point assumed for writing a program. By calculating the offset data manually and shifting the tool nose, the programmed point (imaginary tool nose) can be made to coincide with the cutting point.

CONTENTS

F : MANUAL TOOL NOSE RADIUS OFFSET

1. General F–1

2. Offset for Taper Cutting and Chamfering F–2
   - 2.1 Offset Method F–2
   - 2.2 Calculating Offset Data F–3
   - 2.3 Offset Direction (⇦) and Calculation of Coordinate Values . . . F–5
   - 2.4 Example Programs F–9
   - 2.5 Offset Data Table F–12

3. Offset in Circular Interpolation F–17
   - 3.1 Convex Arc F–17
   - 3.2 Concave Arc F–17
   - 3.3 Calculating the Coordinate Values to be Specified in a Program F–18
   - 3.4 Example Program F–19

4. Programming for a Sample Workpiece F–21

1. General

The tool nose does not have a sharp edge but is slightly rounded (tool nose radius) as illustrated below. Therefore, the point of the tool nose used for programming differs from the actual cutting point. The tool nose radius offset is used to eliminate dimensional errors caused by this difference.

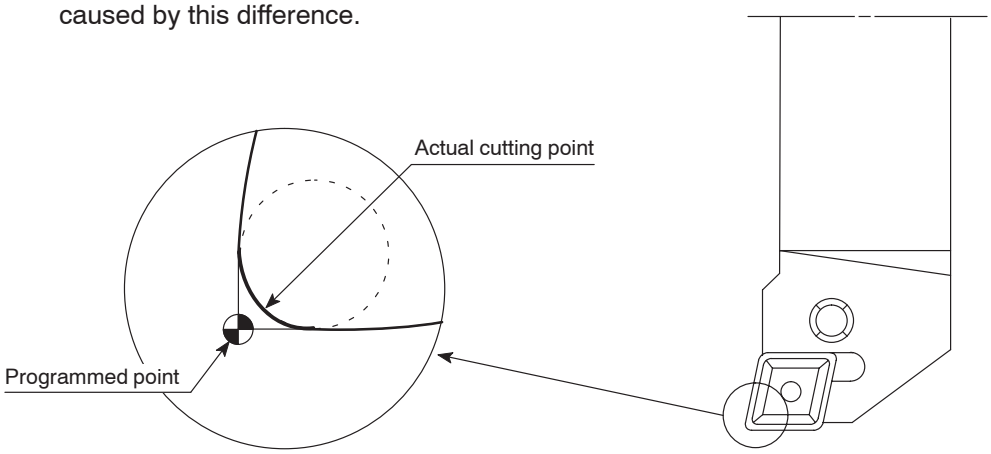

If a program is written without taking into consideration the tool nose radius, overcuts or undercuts occur.

For overcuts (excessive cutting) and undercuts (insufficient cutting), refer to page E–1.

Since it is possible to calculate the overcut and undercut amount, a workpiece can be finished to the dimensions specified on the part drawing by creating the program where the offset amount is included.

The method to offset the programmed tool paths in the manner as indicated above is called the manual tool nose radius offset.

① The function to automatically calculate the offset amount is the automatic tool nose radius offset explained in Chapter E.

② Almost all the cutting tools have rounded tool tip whose radius varies among the type of the cutting tools and inserts. In addition, the necessary offset amount varies according to the tool path patterns.

To finish the workpiece to the dimensions specified on the part drawing, the offset amount must be calculated correctly from the tool nose radius and tool path patterns. Therefore, the programmers are required to understand the principle on the manual tool nose radius offset.

③ Since there are a number of tool patterns which will be used for actual machining and they will differ among users, it is not possible to explain all of the tool patterns in this manual. The explanation given in this chapter is concentrated on the basic tool path patterns along with the cautions to be taken into consideration for programming so that the readers will be able to acquire basic knowledge of the automatic tool nose radius offset function.

2. Offset for Taper Cutting and Chamfering

2.1 Offset Method

In O.D. cutting, the program is first created assuming the imaginary tool tip as the point to move on the programmed path. It is shown as ① and ② in the illustration below. If the program is created in this manner, undercut portion is left. Therefore, ①' and ②' which are offset points from ① and ② taking nose radius into consideration must be obtained to finish the tapered portion correctly.

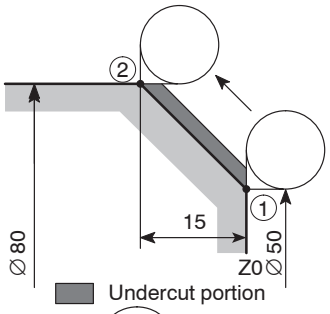

X50.0 Z0; . . . . . ①
X80.0 Z–15.0; . . . . . ②

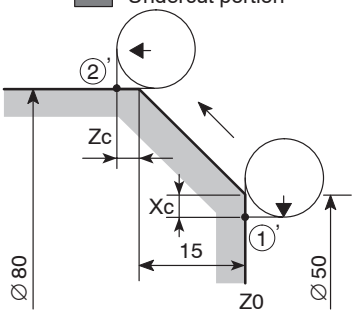

Calculate the offset data (Xc, Zc) and add this offset to the original program (①, ②) to eliminate undercutting.

X(50.0 – 2 × Xc) Z0; . . . . . ①'
X80.0 Z(–15.0 – Zc); . . . . . ②'

In I.D. cutting, the program is first created assuming the imaginary tool tip as the point to move on the programmed path. It is shown as ① and ② in the illustration below. If the program is created in this manner, undercut portion is left. Therefore, ①' and ②' which are offset points from ① and ② taking nose radius into consideration must be obtained to finish the tapered portion correctly.

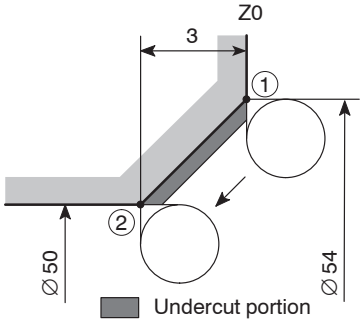

X54.0 Z0; . . . . . ①
X50.0 Z – 3.0; . . . . . ②

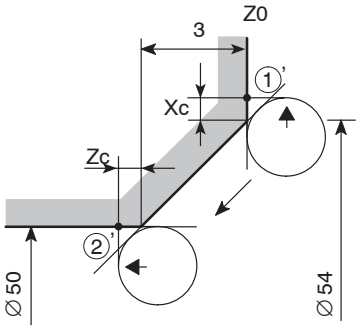

Calculate the offset data (Xc, Zc) and add this offset to the original program (①, ②) to eliminate undercutting.

X(54.0 + 2 × Xc) Z0; . . . . . ①'
X50.0 Z(–3.0 – Zc); . . . . . ②'

The procedure used to calculate Xc and Zc is explained below.

2.2 Calculating Offset Data

1) For undercutting

The additional movement along an axis required to eliminate undercut portions is called the offset data or additional cutting amount. The following shows the diagrams and formulas used to calculate the offset data Xc and Zc required to eliminate undercutting.

<O.D. taper cutting>

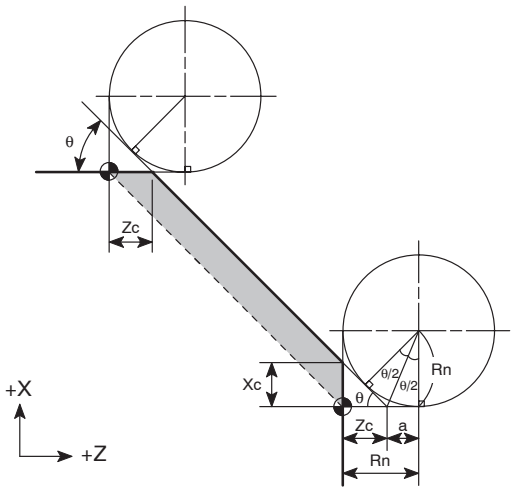

<Calculating Xc and Zc>

- Xc

  $Xc = Zc \times \tan\theta = (Rn - a) \times \tan\theta$
  $= Rn \times \{1 - \tan(\theta/2)\} \times \tan\theta$
  . . . . . Formula ①

- Zc

  $Zc = Rn - a = Rn - Rn \times \tan(\theta/2)$
  $= Rn \times \{1 - \tan(\theta/2)\}$
  . . . . . Formula ②

The offset data calculated using the formulas ① and ② is summarized in the table in 2.5, “Offset Data Table” in this chapter.

<I.D. taper cutting>

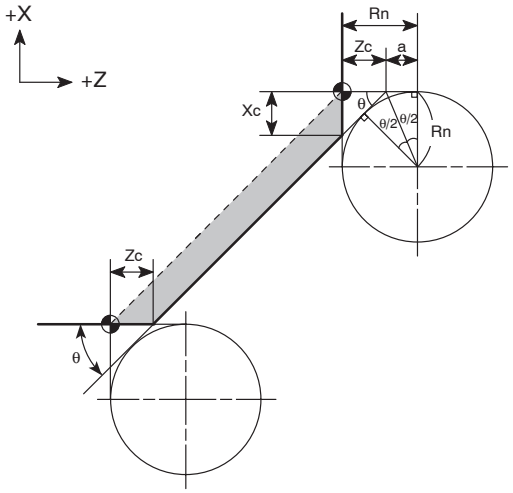

<Calculating Xc and Zc>

- Xc

  $Xc = Zc \times \tan\theta$
  $= Rn \times \{1 - \tan(\theta/2)\} \times \tan\theta$
  . . . . . Formula ①

- Zc

  $Zc = Rn - a = Rn - Rn \times \tan(\theta/2)$
  $= Rn \times \{1 - \tan(\theta/2)\}$
  . . . . . Formula ②

The offset data calculated using the formulas ① and ② is summarized in the table in 2.5, “Offset Data Table” in this chapter.

Rn: Tool nose radius

Xc: Offset data, X-axis

Zc: Offset data, Z-axis

θ: Taper angle, measured from the Z-axis

2) For overcutting

The additional movement along an axis required to eliminate overcut portions is called the offset data or additional cutting amount. The following shows the diagrams and formulas used to calculate the offset data Xc and Z'c required to eliminate overcutting.

<O.D. taper cutting>

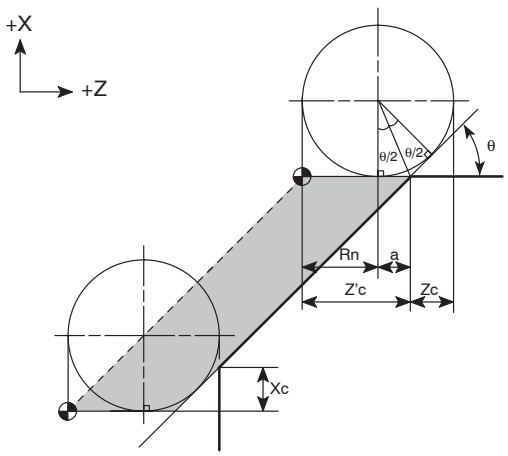

<Calculating Xc and Z'c>

- Xc

  $Xc = Zc \times \tan\theta$
  $= Rn \times \{1 - \tan(\theta/2)\} \times \tan\theta$
  ..... Formula ①

- Z'c

  $Z'c = Rn + a = Rn \times \{1 + \tan(\theta/2)\}$
  ..... Formula ②

  or

  $Z'c = 2 \times Rn - Zc$ ..... Formula ②'

NOTE To use the offset data table, use the formula ②' to calculate the offset data.

The offset data Xc, calculated using formula ①, and the temporary offset data Zc, used for calculating the offset data Z'c by formula ②' are summarized in the table in 2.5, "Offset Data Table" in this chapter.

<I.D. taper cutting>

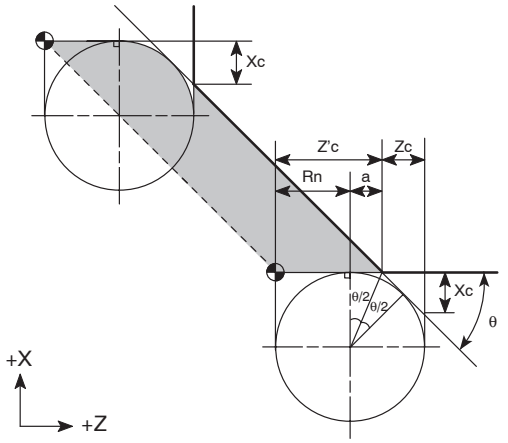

<Calculating Xc and Z'c>

- Xc

  $Xc = Zc \times \tan\theta$
  $= Rn \times \{1 - \tan(\theta/2)\} \times \tan\theta$
  ..... Formula ①

- Z'c

  $Z'c = Rn + a$
  $= Rn \times \{1 + \tan(\theta/2)\}$
  ..... Formula ②

  or

  $Z'c = 2 \times Rn - Zc$ ..... Formula ②'

NOTE To use the offset data table, use the formula ②' to calculate the offset data.

The offset data Xc, calculated using formula ①, and the temporary offset data Zc, used for calculating the offset data Z'c by formula ②' are summarized in the table in 2.5, "Offset Data Table" in this chapter.

Rn: Tool nose radius

Xc: Offset data, X-axis

Z'c: Offset data, Z-axis (Additional cutting amount)

Zc: Offset data for angle θ (data in offset data table)

θ: Taper angle, measured from the Z-axis

2.3 Offset Direction (⇦) and Calculation of Coordinate Values

1) Offset direction

The programmed shape is obtained if the imaginary tool nose moves along the path indicated by the dotted lines.

NOTE In the following diagrams, “A” represents O.D. cutting while “B” represents I.D. cutting.

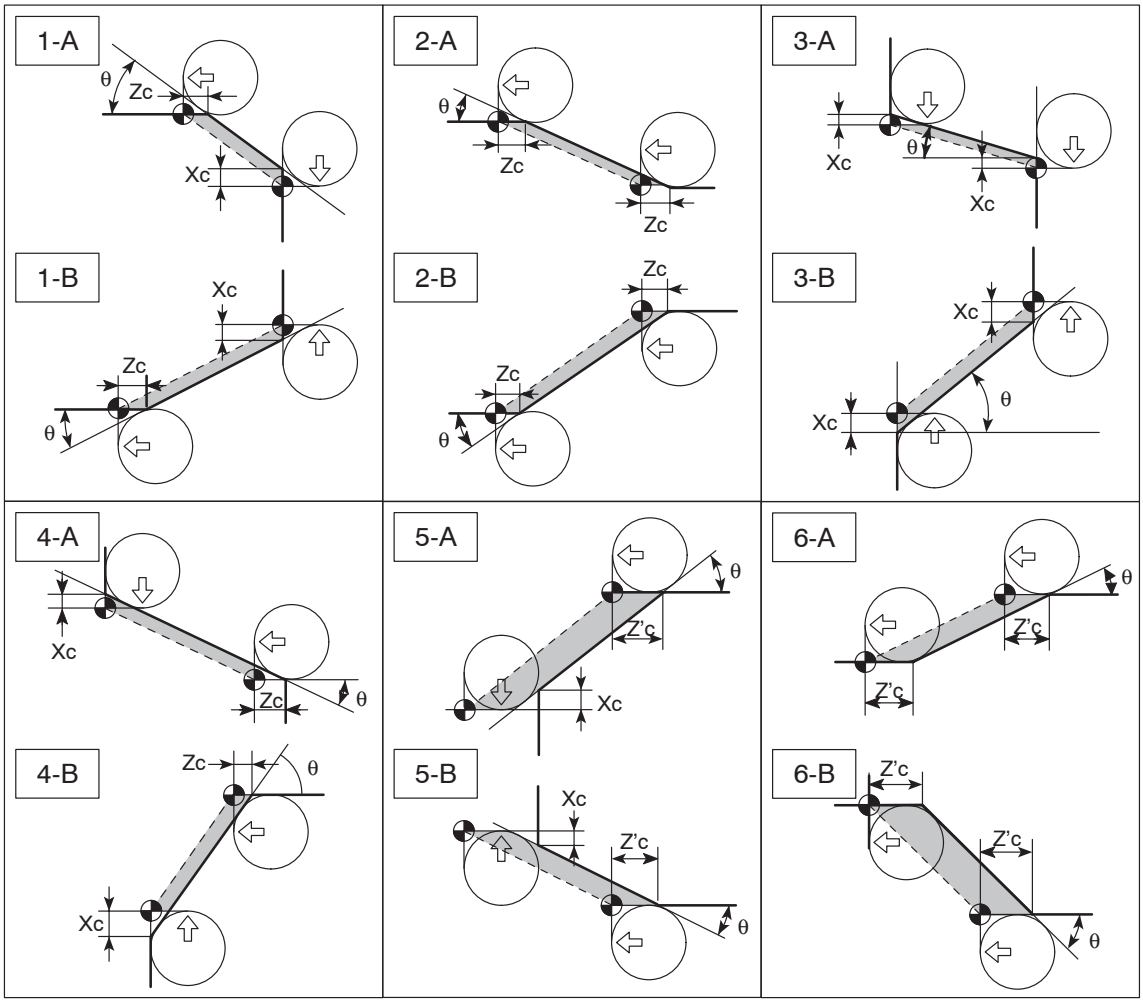

2) Calculating coordinate values

To obtain the coordinate values of the individual axes when the tool nose radius is Rn = 0.8.

1-A

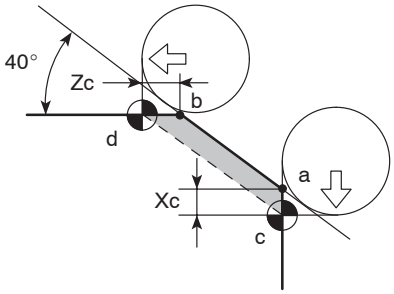

Point	X	Z
a	50.0	0
b	60.0	–5.96

θ = 40° Rn = 0.8

Xc and Zc are found in the offset data table:

Point c: Xc = 0.4269 ≒ 0.427

X = 50.0 – (2 × 0.427) = 49.146

Point c (X49.146, Z0)

Point d: Zc = 0.5088 ≒ 0.509

Z = –5.96 – 0.509 = –6.469

Point d (X60.0, Z–6.469)

1-B

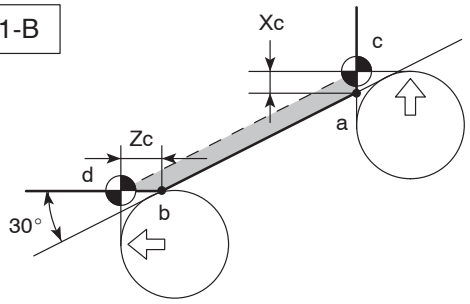

Point	X	Z
a	50.0	0
b	43.08	–6.0

θ = 30° Rn = 0.8

Xc and Zc are found in the offset data table:

Point c: Xc = 0.3381 ≒ 0.338

X = 50.0 + (2 × 0.338) = 50.676

Point c (X50.676, Z0)

Point d: Zc = 0.5856 ≒ 0.586

Z = –6.0 – 0.586 = –6.586

Point d (X43.08, Z–6.586)

2-A

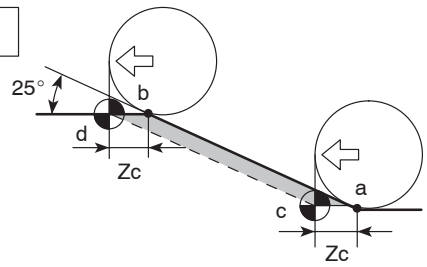

Point	X	Z
a	50.0	–10.0
b	68.65	–30.0

θ = 25° Rn = 0.8

Zc is found in the offset data table:

Zc = 0.6226 ≒ 0.623

Point c: Z = –10.0 – 0.623 = –10.623

Point c (X50.0, Z–10.623)

Point d: Z = –30.0 – 0.623 = –30.623

Point d (X68.65, Z–30.623)

2-B

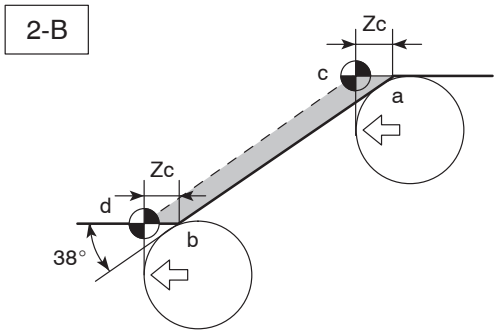

Point	X	Z
a	50.0	–10.0
b	34.38	–20.0

θ = 38° Rn = 0.8

Zc is found in the offset data table:

Zc = 0.5245 ≒ 0.525

Point c: Z = –10.0 – 0.525 = –10.525

Point c (X50.0, Z–10.525)

Point d: Z = –20.0 – 0.525 = –20.525

Point d (X34.38, Z–20.525)

3-A

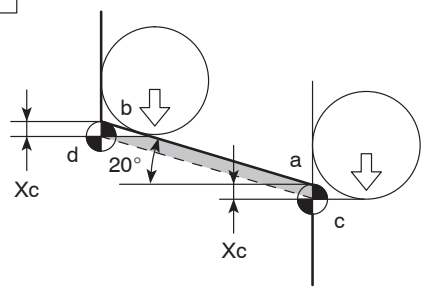

Point	X	Z
a	50.0	0
b	60.92	–15.0

θ = 20° Rn = 0.8

Xc is found in the offset data table:

Xc = 0.2398 ≒ 0.240

Point c: X = 50.0 – (2 × 0.240) = 49.52

Point c (X49.52, Z0)

Point d: X = 60.92 – (2 × 0.240) = 60.44

Point d (X60.44, Z–15.0)

3-B

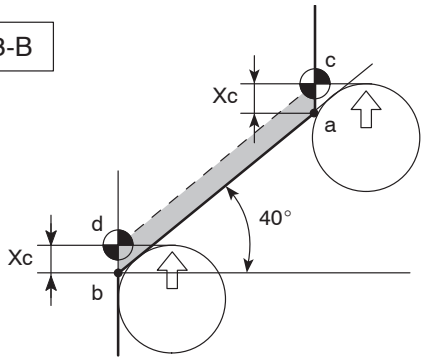

Point	X	Z
a	50.0	0
b	33.22	–10.0

θ = 40° Rn = 0.8

Xc is found in the offset data table:

Xc = 0.4269 ≒ 0.427

Point c: X = 50.0 + (2 × 0.427) = 50.854

Point c (X50.854, Z0)

Point d: X = 33.22 + (2 × 0.427) = 34.074

Point d (X34.074, Z–10.0)

4-A

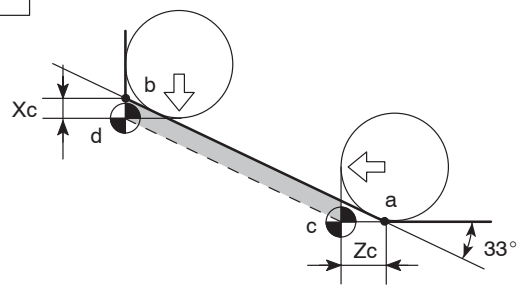

Point	X	Z
a	50.0	–10.0
b	62.98	–20.0

θ = 33° Rn = 0.8

Xc and Zc are found in the offset data table:

Point c: Zc = 0.5630 ≒ 0.563

Z = –10.0 – 0.563 = –10.563

Point c (X50.0, Z–10.563)

Point d: Xc = 0.3656 ≒ 0.366

X = 62.98 – (2 × 0.366) = 62.248

Point d (X62.248, Z–20.0)

4-B

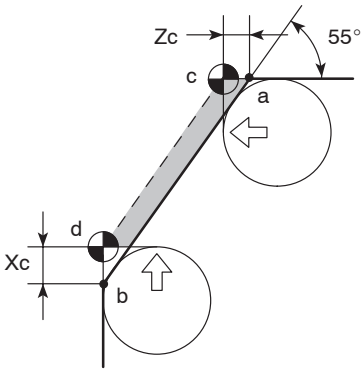

Point	X	Z
a	50.0	–10.0
b	35.72	–15.0

θ = 55° Rn = 0.8

Xc and Zc are found in the offset data table:

Point c: Zc = 0.3835 ≒ 0.384

Z = –10.0 – 0.384 = –10.384

Point c (X50.0, Z–10.384)

Point d: Xc = 0.5477 ≒ 0.548

X = 35.72 + (2 × 0.548) = 36.816

Point d (X36.816, Z–15.0)

5-A

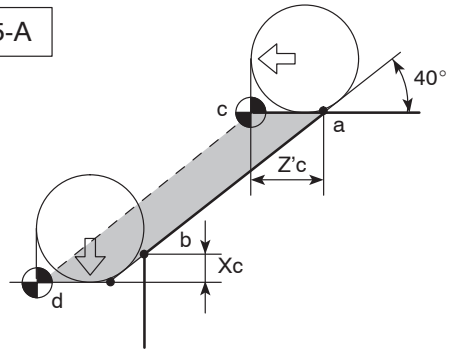

Point	X	Z
a	50.0	–10.0
b	24.82	–25.0

θ = 40° Rn = 0.8

Zc and Xc are found in the offset data table:

Zc = 0.5088 ≒ 0.509

Point c: Z'c = 2 × Rn – Zc
= 2 × 0.8 – 0.509
= 1.091
Z = –10.0 – 1.091 = –11.091
Point c (X50.0, Z–11.091)

Point d: Xc = 0.4269 ≒ 0.427
X = 24.82 – (2 × 0.427) = 23.966
Z = –25.0 – (2 × Rn) = –25.0 – 1.6
= –26.6
Point d (X23.966, Z–26.6)

5-B

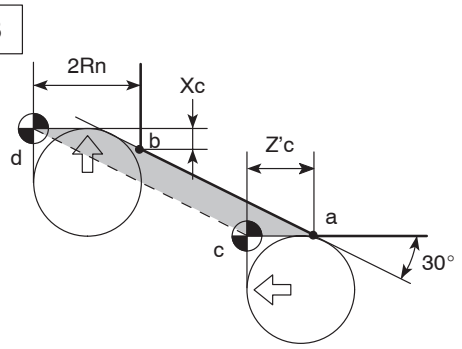

Point	X	Z
a	50.0	–10.0
b	61.54	–20.0

θ = 30° Rn = 0.8

Zc and Xc are found in the offset data table:

Zc = 0.5856 ≒ 0.586

Point c: Z'c = 2 × Rn – Zc
= 2 × 0.8 – 0.586
= 1.014
Z = –10.0 – 1.014 = –11.014
Point c (X50.0, Z–11.014)

Point d: Xc = 0.3381 ≒ 0.338
X = 61.54 + (2 × 0.338) = 62.216
Z = –20.0 – (2 × Rn) = –20.0 – 1.6
= –21.6
Point d (X62.216, Z–21.6)

6-A

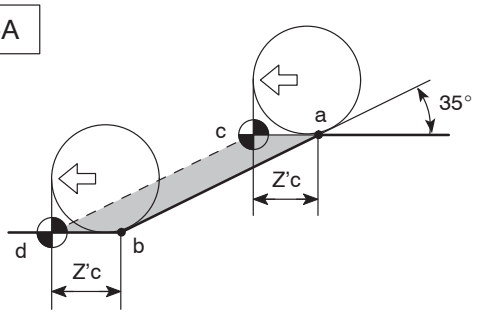

Point	X	Z
a	50.0	–10.0
b	40.0	–17.14

θ = 35° Rn = 0.8

Zc is found in the offset data table:

Zc = 0.5478 ≒ 0.548

Point c: Z'c = 2 × Rn – Zc
= 2 × 0.8 – 0.548
= 1.052
Z = –10.0 – 1.052 = –11.052
Point c (X50.0, Z–11.052)

Point d: Z = –17.14 – 1.052 = –18.192
Point d (X40.0, Z–18.192)

6-B

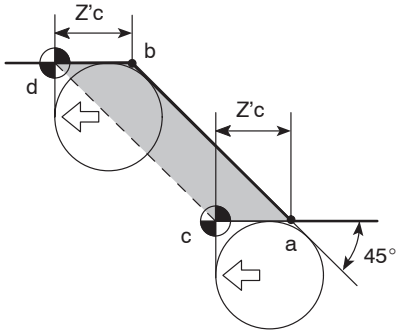

Point	X	Z
a	50.0	–10.0
b	60.0	–15.0

θ = 45° Rn = 0.8

Zc is found in the offset data table:

Zc = 0.4686 ≒ 0.469

Point c: Z'c = 2 × Rn – Zc
= 2 × 0.8 – 0.469
= 1.131
Z = –10.0 – 1.131 = –11.131
Point c (X50.0, Z–11.131)

Point d: Z = –15.0 – 1.131 = –16.131
Point d (X60.0, Z–16.131)

2.4 Example Programs

Ex. **O.D. and I.D. cutting**

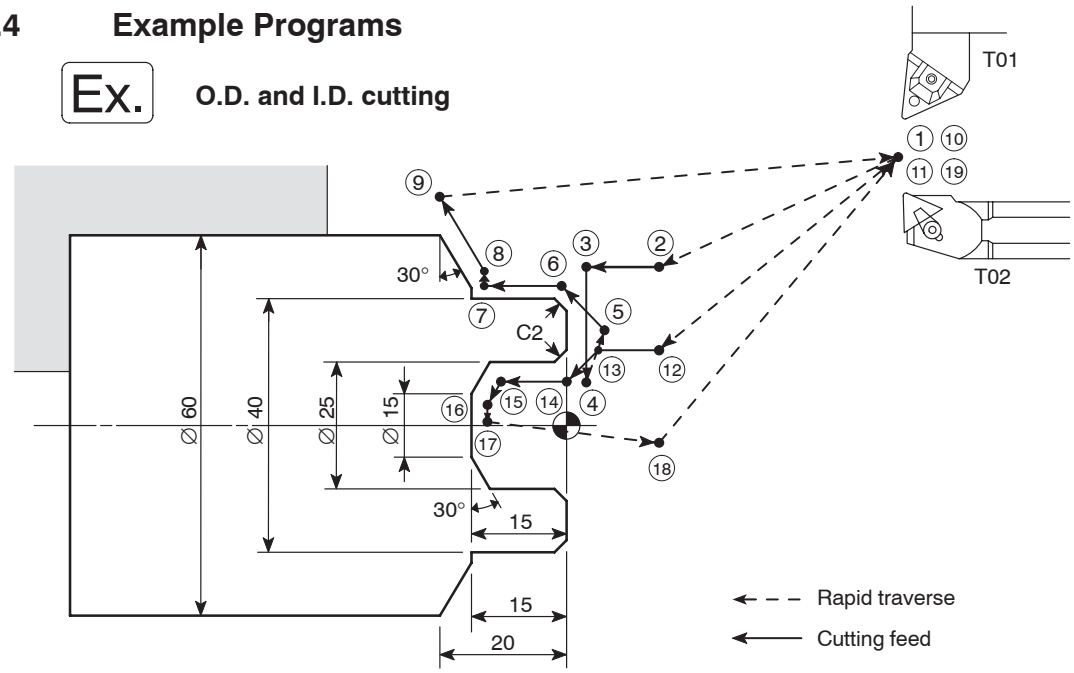

<Tool nose is disregarded>

```
O0001;
N1;
G50 S2000; ..... ①
G00 T0101;
G96 S180 M03;
X46.0 Z20.0 M08; ..... ②
G01 Z0 F1.0; ..... ③
X20.0 F0.15; ..... ④
G00 X34.0 Z1.0; ..... ⑤
G01 X40.0 Z–2.0; ..... ⑥
Z–15.0; ..... ⑦
X42.679; ..... ⑧
X60.0 Z–20.0; ..... ⑨
G00 X200.0 Z100.0; ..... ⑩
M01;

N2;
G50 S2500; ..... ⑪
G00 T0202;
G96 S200 M03;
X31.0 Z20.0; ..... ⑫
G01 Z1.0 F1.0; ..... ⑬
X25.0 Z–2.0 F0.15; ..... ⑭
Z–12.113; ..... ⑮
X15.0 Z–15.0; ..... ⑯
X0; ..... ⑰
G00 U–1.0 Z20.0; ..... ⑱
X200.0 Z100.0; ..... ⑲
M01;
```

<Tool nose radius = 0.4 mm>

```
O0001;
N1;
G50 S2000;
G00 T0101;
G96 S180 M03;
X46.0 Z20.0 M08;
G01 Z0 F1.0;
X20.0 F0.15;
G00 X33.532 Z1.0;
G01 X40.0 Z–2.234;
Z–15.0;
X42.094;
X60.0 Z–20.169;
G00 X200.0 Z100.0;
M01;

N2;
G50 S2500;
G00 T0202;
G96 S200 M03;
X31.468 Z20.0;
G01 Z1.0 F1.0;
X25.0 Z–2.234 F0.15;
Z–12.282;
X15.586 Z–15.0;
X0.8;
G00 U–1.0 Z20.0;
X200.0 Z100.0;
M01;
```

NOTE Underlined "____" coordinate values include offset data.

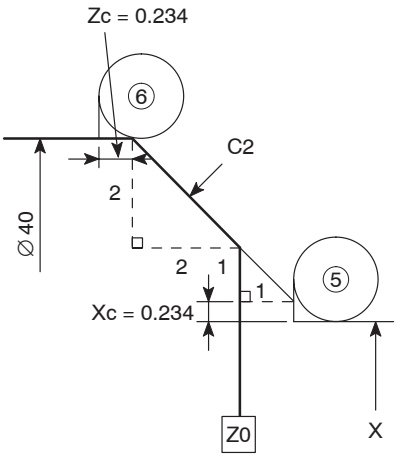

⑤ X33.532

θ = 45° Rn = 0.4

Xc is found in the offset data table:

Xc = 0.2343 ≒ 0.234

X = 40.0 – 2 (2.0 + 1.0 + 0.234)

= 33.532

NOTE Value X should be given in diameters.

⑥ Z–2.234

θ = 45° Rn = 0.4

Zc is found in the offset data table:

Zc = 0.2343 ≒ 0.234

Z = 0 – 2.0 – 0.234

= –2.234

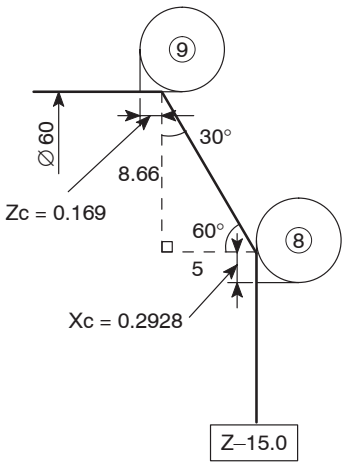

⑧ X42.094

θ = 60° Rn = 0.4

Xc is found in the offset data table:

Xc = 0.29282 ≒ 0.2928

8.66 = 5 × tan60°

X = 60.0 – 2 (8.66 + 0.2928)

= 42.094

NOTE Value X should be given in diameters.

⑨ Z–20.169

θ = 60° Rn = 0.4

Zc is found in the offset data table:

Zc = 0.1690 ≒ 0.169

Z = –15.0 – 5.0 – 0.169

= –20.169

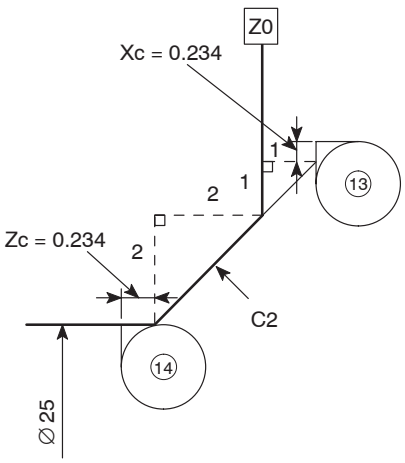

⑬ X31.468

θ = 45° Rn = 0.4

Xc is found in the offset data table:

Xc = 0.2343 ≒ 0.234

X = 25.0 + 2 (2.0 + 1.0 + 0.234)

= 31.468

The X coordinates of points ⑫ and ⑬ are the same.

NOTE Value X should be given in diameters.

⑭ Z–2.234

θ = 45° Rn = 0.4

Zc is found in the offset data table:

Zc = 0.2343 ≒ 0.234

Z = 0 – 2.0 – 0.234

= –2.234

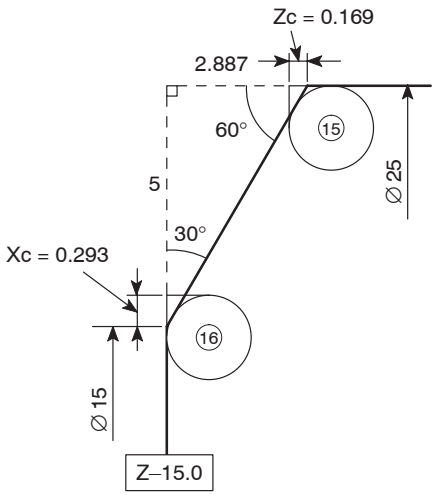

⑮ Z–12.282

θ = 60° Rn = 0.4

Zc is found in the offset data table:

Zc = 0.1690 ≒ 0.169

2.887 = 5 × tan30°

Z = –15.0 + 2.887 – 0.169

= –12.282

⑯ X15.586

θ = 60° Rn = 0.4

Xc is found in the offset data table:

Xc = 0.2928 ≒ 0.293

X = 15.0 + (2 × 0.293)

= 15.586

In the case of X0:

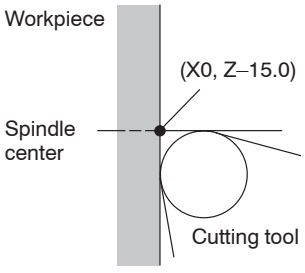

Fig. A

In the case of X0.8:

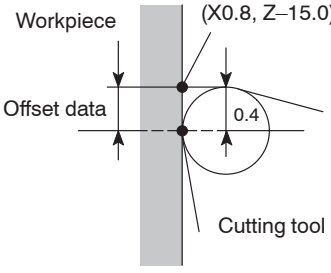

Fig. B

⑰ X0.8

If “X0” is specified in this block, the tool tip moves beyond the spindle center line. In this position, the cutting edge direction does not correspond to the rotating direction of the spindle (workpiece).

Therefore, in this block, the X coordinate must be away from the spindle center line by the nose radius.

Rn = 0.4

X = 2 × 0.4

= 0.8

2.5 Offset Data Table

Find the required offset data.

Use the left column Nose R (X, Z) if the taper angle is 1° to 45°.

Use the right column Nose R (Z, X) if the taper angle is 45° to 89°.

θ	Nose R	0.4	0.5	0.8	1.0	1.2	Nose R	θ
1°	X	.006921	.008651	.013842	.017303	.020763	Z	89°
	Z	.396509	.495636	.793019	.991273	1.189528	X	
1°30’	X	.010337	.012922	.020675	.025843	.031012	Z	88°30’
	Z	.394764	.493455	.789527	.986909	1.184291	X	
2°	X	.013724	.017156	.027449	.034311	.041173	Z	88°
	Z	.393018	.491272	.786036	.982545	1.179054	X	
2°30’	X	.017083	.021354	.034167	.042708	.051250	Z	87°30’
	Z	.391272	.489090	.782544	.978180	1.173816	X	
3°	X	.020414	.025518	.040828	.051035	.061243	Z	87°
	Z	.389526	.486907	.779051	.973814	1.168577	X	
3°30’	X	.023718	.029647	.047435	.059294	.071153	Z	86°30’
	Z	.387779	.484724	.775558	.969447	1.163337	X	
4°	X	.026994	.033742	.053988	.067485	.080982	Z	86°
	Z	.386032	.482540	.772063	.965079	1.158095	X	
4°30’	X	.030244	.037805	.060488	.075610	.090731	Z	85°30’
	Z	.384284	.480355	.768568	.960710	1.152852	X	
5°	X	.033468	.041834	.066935	.083669	.100403	Z	85°
	Z	.382536	.478170	.765071	.956339	1.147607	X	
5°30’	X	.036666	.045832	.073331	.091664	.109997	Z	84°30’
	Z	.380787	.475983	.761573	.951967	1.142360	X	
6°	X	.039838	.049798	.079677	.099596	.119515	Z	84°
	Z	.379037	.473796	.758074	.947592	1.137111	X	
6°30’	X	.042986	.053733	.085973	.107466	.128959	Z	83°30’
	Z	.377286	.471608	.754573	.943216	1.131859	X	
7°	X	.046110	.057637	.092220	.115275	.138330	Z	83°
	Z	.375535	.469419	.751070	.938837	1.126605	X	
7°30’	X	.049209	.061512	.098419	.123024	.147628	Z	82°30’
	Z	.373783	.467228	.747565	.934457	1.121348	X	
8°	X	.052285	.065357	.104571	.130713	.156856	Z	82°
	Z	.372029	.465037	.744059	.930073	1.116088	X	
8°30’	X	.055338	.069172	.110676	.138345	.166014	Z	81°30’
	Z	.370275	.472844	.740550	.925687	1.110825	X	
9°	X	.058368	.072960	.116735	.145919	.175103	Z	81°
	Z	.368519	.460649	.737039	.921298	1.105558	X	
9°30’	X	.061375	.076719	.122750	.153438	.184125	Z	80°30’
	Z	.366763	.458453	.733525	.916906	1.100288	X	

θ	Nose R	0.4	0.5	0.8	1.0	1.2	Nose R	θ
10°	X	.064360	.080450	.128720	.160900	.193080	Z	80°
	Z	.365005	.456256	.730009	.912511	1.095014	X	
10°30’	X	.067324	.084154	.134647	.168309	.201971	Z	79°30’
	Z	.363245	.454056	.726490	.908113	1.089735	X	
11°	X	.070265	.087832	.140531	.175664	.210796	Z	79°
	Z	.361484	.451855	.722969	.903711	1.084453	X	
11°30’	X	.073186	.091483	.146373	.182966	.219559	Z	78°30’
	Z	.359722	.449653	.719444	.899305	1.079166	X	
12°	X	.076086	.095108	.152173	.190216	.228259	Z	78°
	Z	.357958	.447448	.715917	.894896	1.073875	X	
12°30’	X	.078966	.098708	.157932	.197415	.236898	Z	77°30’
	Z	.356193	.445241	.712386	.890482	1.068579	X	
13°	X	.081826	.102282	.163651	.204564	.245477	Z	77°
	Z	.354426	.443032	.708852	.886064	1.063277	X	
13°30’	X	.084665	.105832	.169331	.211664	.253996	Z	76°30’
	Z	.352657	.440821	.705314	.881642	1.057971	X	
14°	X	.087486	.109357	.174972	.218714	.262457	Z	76°
	Z	.350886	.438608	.701772	.877215	1.052659	X	
14°30’	X	.090287	.112859	.180574	.225717	.270861	Z	75°30’
	Z	.349114	.436392	.698227	.872784	1.047341	X	
15°	X	.093069	.116337	.186138	.232673	.279208	Z	75°
	Z	.347339	.434174	.694678	.868348	1.042017	X	
15°30’	X	.095833	.119791	.191666	.239582	.287499	Z	74°30’
	Z	.345562	.431953	.691125	.863906	1.036687	X	
16°	X	.098578	.123223	.197157	.246446	.295735	Z	74°
	Z	.343784	.429730	.687567	.859459	1.031351	X	
16°30’	X	.101306	.126632	.202612	.253265	.303917	Z	73°30’
	Z	.342003	.427503	.684006	.855007	1.026008	X	
17°	X	.104016	.130019	.208031	.260039	.312047	Z	73°
	Z	.340220	.425274	.680439	.850549	1.020659	X	
17°30’	X	.106708	.133385	.213416	.266770	.320124	Z	72°30’
	Z	.338434	.423043	.676868	.846085	1.015302	X	
18°	X	.109383	.136729	.218766	.273457	.328149	Z	72°
	Z	.336646	.420808	.673292	.841616	1.009939	X	
18°30’	X	.112041	.140052	.224082	.280103	.336124	Z	71°30’
	Z	.334856	.418570	.669712	.837140	1.004568	X	
19°	X	.114683	.143353	.229366	.286707	.344048	Z	71°
	Z	.333063	.416329	.666126	.832657	.999189	X	
19°30’	X	.117308	.146635	.234616	.293270	.351924	Z	70°30’
	Z	.331267	.414084	.662535	.828169	.993802	X	

θ	Nose R	0.4	0.5	0.8	1.0	1.2	Nose R	θ
20°	X	.119917	.149896	.239834	.299792	.359751	Z	70°
	Z	.329469	.411837	.658938	.823673	.988408	X	
20°30’	X	.122510	.153138	.245020	.306275	.367530	Z	69°30’
	Z	.327668	.409585	.655336	.819171	.983005	X	
21°	X	.125088	.156360	.250175	.312719	.375263	Z	69°
	Z	.325864	.407330	.651729	.814661	.977593	X	
21°30’	X	.127650	.159562	.225299	.319124	.382949	Z	68°30’
	Z	.324058	.405072	.648115	.810144	.972173	X	
22°	X	.130197	.162746	.260393	.325491	.390590	Z	68°
	Z	.322248	.402810	.644496	.805620	.966744	X	
22°30’	X	.132729	.165911	.265457	.331821	.398186	Z	67°30’
	Z	.320435	.400544	.640870	.801088	.961305	X	
23°	X	.135246	.169057	.270492	.338114	.405737	Z	67°
	Z	.318619	.398274	.637238	.796548	.955857	X	
23°30’	X	.137749	.172186	.275497	.344371	.413246	Z	66°30’
	Z	.316800	.396000	.633600	.792000	.950400	X	
24°	X	.140237	.175296	.280474	.350592	.420711	Z	66°
	Z	.314977	.393722	.629955	.787443	.944932	X	
24°30’	X	.142711	.178389	.285423	.356778	.428134	Z	65°30’
	Z	.313151	.391439	.626303	.782879	.939454	X	
25°	X	.145172	.181465	.290344	.362930	.435516	Z	65°
	Z	.311322	.389153	.622644	.778305	.933966	X	
25°30’	X	.147619	.184523	.295238	.369047	.442856	Z	64°30’
	Z	.309489	.386862	.618978	.773723	.928468	X	
26°	X	.150052	.187565	.300105	.375131	.450157	Z	64°
	Z	.307653	.384566	.615305	.769132	.922958	X	
26°30’	X	.152472	.190591	.304945	.381181	.457417	Z	63°30’
	Z	.305813	.382266	.611625	.764531	.917438	X	
27°	X	.154880	.193600	.309759	.387199	.464639	Z	63°
	Z	.303968	.379961	.607937	.759921	.911905	X	
27°30’	X	.157274	.196593	.314548	.393185	.471822	Z	62°30’
	Z	.302121	.377651	.604241	.755302	.906362	X	
28°	X	.159656	.199570	.319312	.399139	.478967	Z	62°
	Z	.300269	.375336	.600538	.750672	.900806	X	
28°30’	X	.162025	.202531	.324050	.405063	.486075	Z	61°30’
	Z	.298413	.373016	.596826	.746032	.895239	X	
29°	X	.164382	.205477	.328764	.410955	.493146	Z	61°
	Z	.296553	.370691	.593106	.741382	.889659	X	
29°30’	X	.166727	.208409	.333454	.416817	.500181	Z	60°30’
	Z	.294689	.368361	.589378	.736722	.884066	X	

θ	Nose R	0.4	0.5	0.8	1.0	1.2	Nose R	θ
30°	X	.169060	.211325	.338120	.422650	.507180	Z	60°
	Z	.292820	.366025	.585641	.732051	.878461	X	
30°30’	X	.171381	.214226	.342762	.428453	.514143	Z	59°30’
	Z	.290947	.363684	.581895	.727369	.872842	X	
31°	X	.173691	.217114	.347382	.434227	.521073	Z	59°
	Z	.289070	.361338	.578140	.722675	.867211	X	
31°30’	X	.175989	.219987	.351978	.439973	.527968	Z	58°30’
	Z	.287188	.358985	.574377	.717971	.861565	X	
32°	X	.178276	.222845	.356553	.445691	.534829	Z	58°
	Z	.285302	.356627	.570604	.713255	.855906	X	
32°30’	X	.180552	.225691	.361105	.451381	.541657	Z	57°30’
	Z	.283411	.354263	.566821	.708527	.850232	X	
33°	X	.182818	.228522	.365635	.457044	.548453	Z	57°
	Z	.281515	.351893	.563029	.703787	.844544	X	
33°30’	X	.185072	.231340	.370144	.462681	.555217	Z	56°30’
	Z	.279614	.349517	.559227	.699034	.838841	X	
34°	X	.187316	.234145	.374632	.468291	.561949	Z	56°
	Z	.277708	.347135	.555415	.694269	.833123	X	
34°30’	X	.189550	.236937	.379100	.473875	.568649	Z	55°30’
	Z	.275797	.344746	.551593	.689492	.827390	X	
35°	X	.191733	.239716	.383546	.479433	.575320	Z	55°
	Z	.273880	.342351	.547761	.684701	.821641	X	
35°30’	X	.193986	.242483	.387973	.484966	.581959	Z	54°30’
	Z	.271959	.339949	.543918	.679897	.815877	X	
36°	X	.196190	.245237	.392380	.490475	.588569	Z	54°
	Z	.270032	.337540	.540064	.675080	.810096	X	
36°30’	X	.198383	.247979	.396767	.495959	.595150	Z	53°30’
	Z	.268100	.335125	.536200	.670249	.804299	X	
37°	X	.200567	.250709	.401135	.501418	.601702	Z	53°
	Z	.266162	.332702	.532324	.665405	.798486	X	
37°30’	X	.202742	.253427	.405484	.506855	.608225	Z	52°30’
	Z	.264218	.330273	.528437	.660546	.792655	X	
38°	X	.204907	.256134	.409814	.512267	.614721	Z	52°
	Z	.262269	.327836	.524538	.655672	.786807	X	
38°30’	X	.207063	.258829	.414126	.517657	.621189	Z	51°30’
	Z	.260314	.325392	.520627	.650784	.780941	X	
39°	X	.209210	.261512	.418420	.523024	.627629	Z	51°
	Z	.258353	.322941	.516705	.645881	.775058	X	
39°30’	X	.211348	.264185	.422696	.528369	.634043	Z	50°30’
	Z	.256385	.320482	.512771	.640963	.769156	X	

θ	Nose R	0.4	0.5	0.8	1.0	1.2	Nose R	θ
40°	X	.213477	.266846	.426954	.533692	.640431	Z	50°
	Z	.254412	.318015	.508824	.636030	.763236	X	
40°30’	X	.215597	.269497	.431195	.538994	.646792	Z	49°30’
	Z	.252432	.315540	.504864	.631081	.757297	X	
41°	X	.217709	.272137	.435419	.544274	.653128	Z	49°
	Z	.250446	.313058	.500892	.626115	.751338	X	
41°30’	X	.219813	.274766	.439626	.549533	.659439	Z	48°30’
	Z	.248454	.310567	.496907	.621134	.745361	X	
42°	X	.221909	.277386	.443817	.554771	.665726	Z	48°
	Z	.246454	.308068	.492909	.616136	.739363	X	
42°30’	X	.223996	.279995	.447992	.559989	.671987	Z	47°30’
	Z	.244449	.305561	.488897	.611121	.733346	X	
43°	X	.226075	.282594	.452150	.565188	.678225	Z	47°
	Z	.242436	.303045	.484872	.606090	.727307	X	
43°30’	X	.228146	.285183	.456293	.570366	.684439	Z	46°30’
	Z	.240416	.300520	.480832	.601040	.721249	X	
44°	X	.230210	.287763	.460420	.575525	.690630	Z	46°
	Z	.238390	.297987	.476779	.595974	.715169	X	
44°30’	X	.232266	.290333	.464532	.580665	.696798	Z	45°30’
	Z	.236356	.295445	.472711	.590889	.709067	X	
45°	X	.234315	.292893	.468629	.585786	.702944	Z	45°
	Z	.234315	.292893	.468629	.585786	.702944	X	

3. Offset in Circular Interpolation

When cutting an arc, it is possible to cut the arc as specified on a drawing by offsetting the tool position.

3.1 Convex Arc

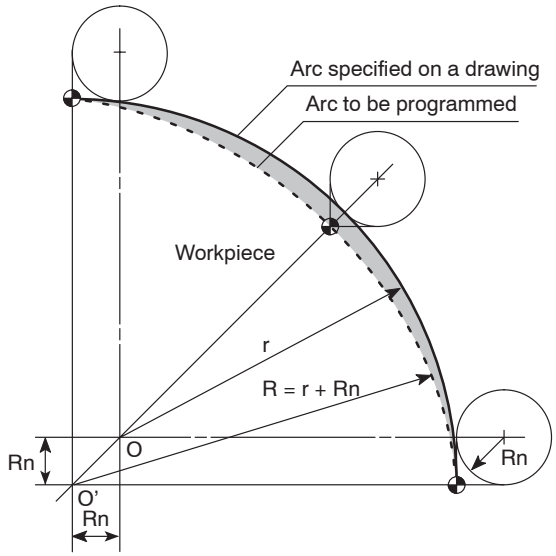

By specifying the arc, shown by the dotted lines, it is possible to cut an arc as specified on the drawing.

Programmed arc radius (R)
= Radius (r) of the arc specified on the drawing
+ Tool nose radius (Rn)

3.2 Concave Arc

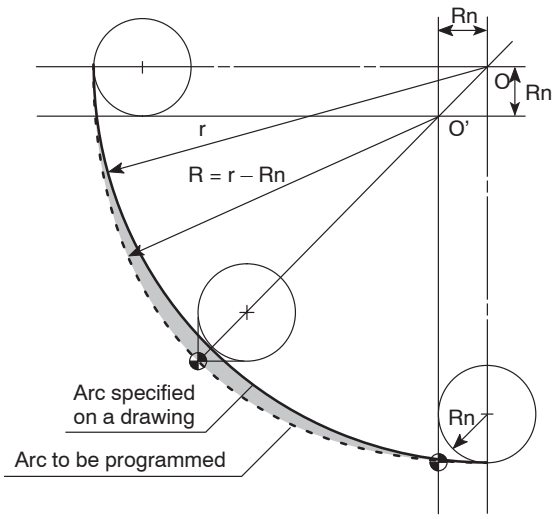

By specifying the arc, shown by the dotted lines, it is possible to cut an arc as specified on the drawing.

Programmed arc radius (R)
= Radius (r) of the arc specified on the drawing
– Tool nose radius (Rn)

r: Arc radius (specified on drawing) O: Arc center (specified on drawing)
Rn: Tool nose radius O': Arc center (for programmed arc)

3.3 Calculating the Coordinate Values to be Specified in a Program

The coordinate values to be specified in a program to offset for the tool nose radius are explained below.

1) Calculating the required coordinate values directly

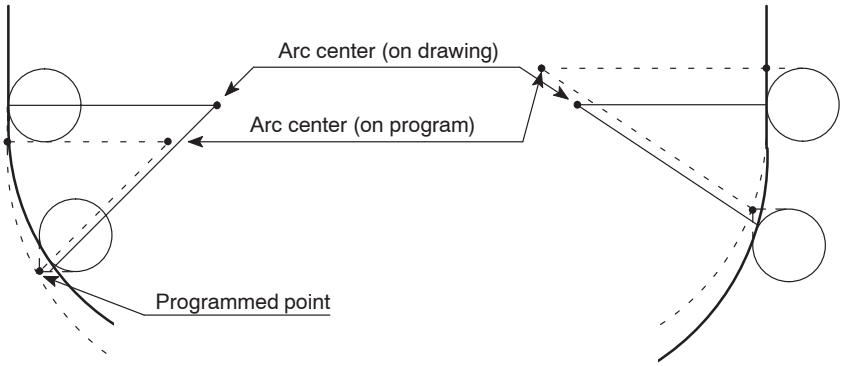

When calculating the required coordinate values, assume the shape shown by the dotted lines. The center of the arc specified on a drawing and the center of the arc to be programmed will differ from each other.

2) Calculating the required coordinate values after calculating the tool nose center

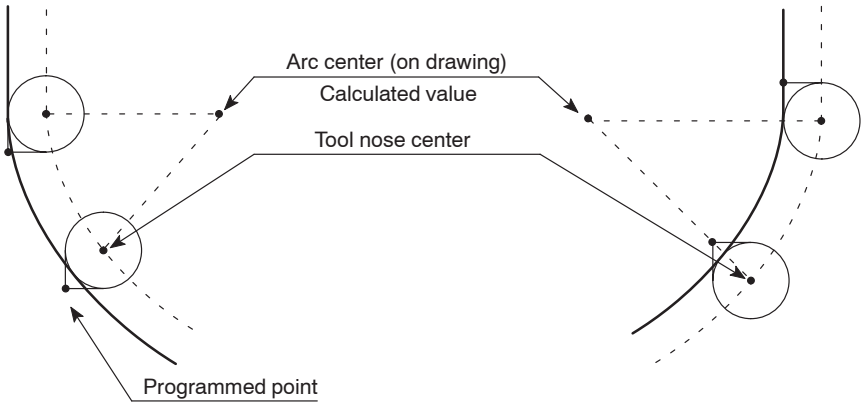

In this method, the coordinate values of the tool nose center is calculated first. After that, the programmed points are calculated by adding or subtracting the tool nose radius to, or from, the calculated center of the arc.

NOTE In the following examples, the tool nose center is calculated using method 2).

3.4 Example Program

Ex. **O.D. cutting including arcs**

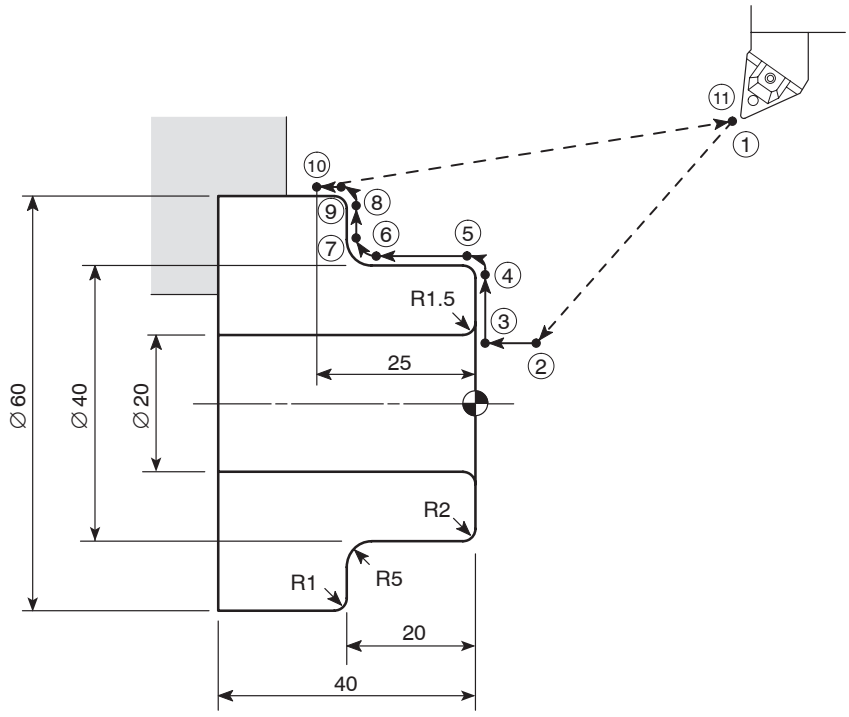

<Tool nose is disregarded>		**<Tool nose radius = 0.8 mm>**
O0001;		O0001;
N1;		N1;
G50 S2000;	①	G50 S2000;
G00 T0101;		G00 T0101;
G96 S150 M03;		G96 S150 M03;
X18.0 Z20.0 M08;	②	X18.0 Z20.0 M08;
G01 Z0 F1.0;	③	G01 Z0 F1.0;
X36.0 F0.25;	④	**X34.4** F0.25;
G03 X40.0 Z–2.0 R2.0; ...	⑤	G03 X40.0 **Z–2.8** **R2.8**;
G01 Z–15.0;	⑥	G01 **Z–15.8**;
G02 X50.0 Z–20.0 R5.0; ..	⑦	G02 **X48.4** Z–20.0 **R4.2**;
G01 X58.0;	⑧	G01 **X56.4**;
G03 X60.0 Z–21.0 R1.0; ..	⑨	G03 X60.0 **Z–21.8** **R1.8**;
G01 Z–25.0;	⑩	G01 Z–25.0;
G00 X100.0 Z50.0;	⑪	G00 X100.0 Z50.0;
⋮		⋮

NOTE Underlined "____" coordinate values include offset data.

Points ④ and ⑤

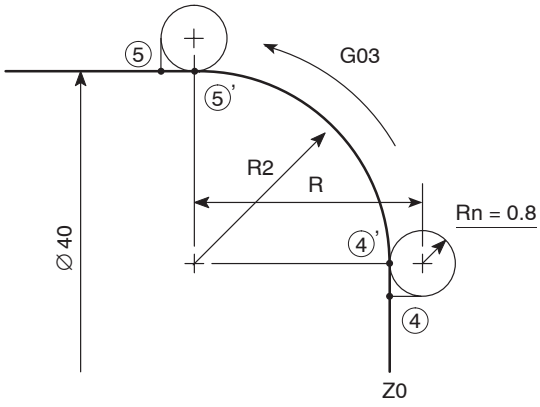

A convex arc is cut.

The X and Z coordinate values are calculated for points ④ and ⑤. For a quarter circle, X and Z coordinate values can be calculated easily.

As shown on the drawing,

Z coordinate value of point ④:
Z = 0 (end face to be finished),
X coordinate value of point ⑤:
X = 40.0 (40 mm dia.).

Next,

X coordinate value of point ④:

X = Diameter of point ⑤'
– 2 (Arc radius
+ Tool nose radius Rn)
= 40.0 – 2(2.0 + 0.8) = (40.0 – 5.6)
= 34.4

Z coordinate value of point ⑤:

Z = – (Arc radius + Tool nose radius Rn)
= – (2.0 + 0.8)
= – 2.8

Radius (R) to be used in a program is:

R = Arc radius + Tool nose radius Rn
= 2.0 + 0.8
= 2.8

Points ⑥ and ⑦

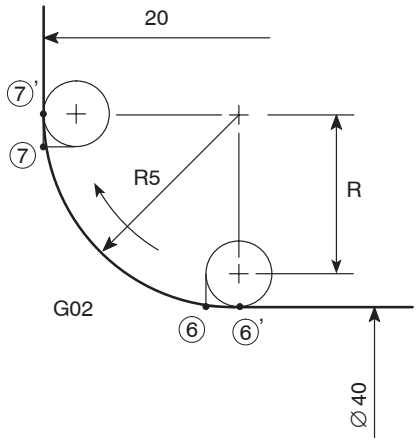

A concave arc is cut.

As shown on the drawing,

As in the explanation for points ④ and ⑤, the coordinate values of points ⑥ and ⑦ are calculated similarly.

X coordinate value of point ⑥:
X = 40.0 (40 mm dia.)
Z coordinate value of point ⑦:
Z = –20.0

Next,

Z coordinate value of point ⑥:

Z = –|Z coordinate value of point ⑦'|
– (Arc radius – Tool nose radius Rn)
= –|20| + (5.0 – 0.8)
= –15.8

NOTE The pair of a vertical bar (| |) is the mathematical symbols indicating an absolute value.

X coordinate value of point ⑦:

X = Diameter of point ⑥'
+ 2(Arc radius – Tool nose radius Rn)
= 40.0 + 2(5.0 – 0.8)
= 48.4

Radius (R) to be used in a program is:

R = Arc radius + Tool nose radius Rn
= 5.0 – 0.8
= 4.2

4. Programming for a Sample Workpiece

The part programs for the facing, O.D. finishing, and I.D. finishing are written for the sample workpiece illustrated below.

Compare the program with the one created in 27., “Summary” of Chapter C and 5.3, “Programming for a Sample Workpiece” of Chapter E.

<Drawing>

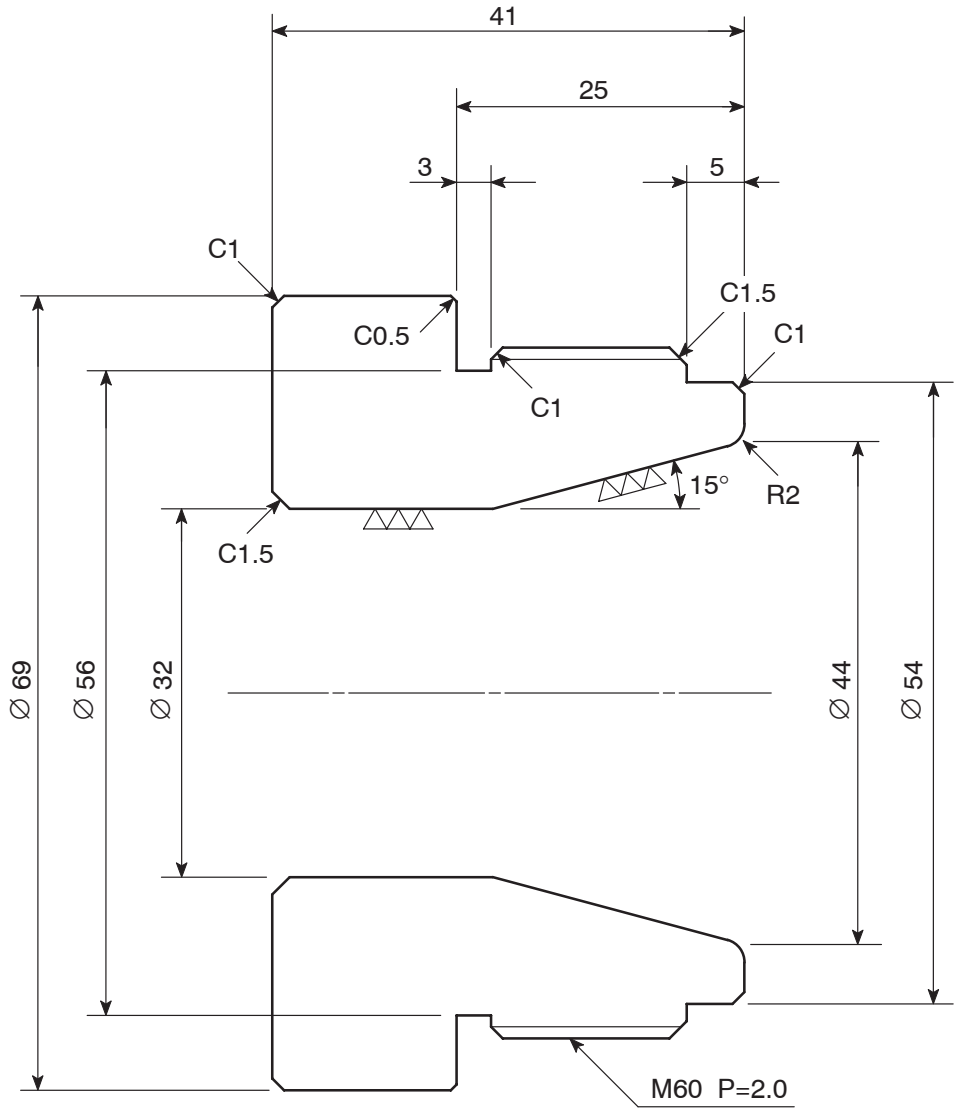

Finishing is ▽▽ unless otherwise specified.

<Dimensions of blank workpiece>

Blank Workpiece		Description
Material		AISI 1045 (Carbon steel)
Dimensions (mm)	O.D.	70
	I.D.	30
	Length	43

<Part programs for facing, O.D. finishing and I.D. finishing>

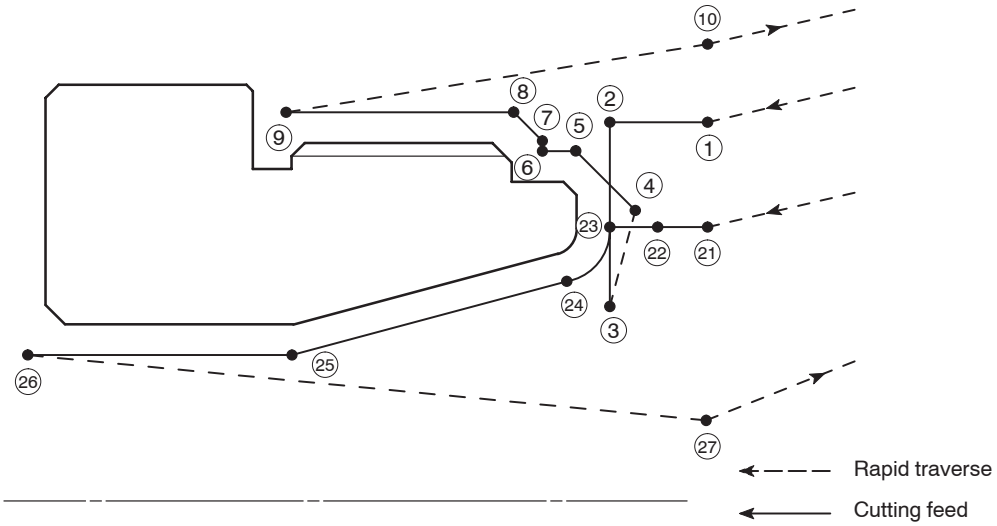

N3(FIN. OF. OUT.); . . . . . Part program for finish facing and O.D. finishing (tool nose radius: 0.4)

G50 S2000; . . . . . Setting the spindle speed limit for automatic operation at 2000 min^{-1}

G00 T0303 (M42)*; . . . . . Selecting the No. 3 tool

G96 S200 M03; . . . . . Starting the spindle or spindle 1 in the normal direction at the cutting speed of 200 m/min

① X56.0 Z20.0 M08; . . . . . Approaching cutting tool to the workpiece at a rapid traverse rate

② G01 Z0 F1.0;

③ X30.0 F0.15;

④ G00 **X49.54** W1.0; . . . . . Positioning; tool nose radius is taken into consideration.

⑤ G01 X54.0 **Z–1.23**; . . . . . Cutting to the specified position; tool nose radius is taken into consideration.

⑥ Z–5.0;

⑦ **X56.34**; . . . . . Cutting to the specified position; tool nose radius is taken into consideration.

⑧ X59.8 **Z–6.73**; . . . . . Cutting to the specified position; tool nose radius is taken into consideration.

⑨ Z–23.0 F0.2;

⑩ G00 U1.0 Z20.0;

X200.0 Z150.0; . . . . . Retracting cutting tool from the workpiece at a rapid traverse rate

M01; . . . . . If optional stop is valid:
The machine stops temporarily.
If optional stop is invalid:
The machine does not stop and the program is continuously executed.

N4(FIN. OF. IN.); . . . . . Part program for I.D. finishing (tool nose radius : 0.4)

G50 S2000; . . . . . Setting the spindle speed limit for automatic operation at 2000 min^{-1}

G00 T0404 (M42)*; . . . . . Selecting the No. 4 tool

G96 S200 M03; . . . . . Starting the spindle or spindle 1 in the normal direction at the cutting speed of 200 m/min

㉑ **X47.869** Z20.0 M08; . . . . . Positioning of only X-axis; tool nose radius is taken into consideration.

㉒ G01 Z1.0 F1.0;

㉓ Z0 F0.2;

㉔ G02 **X43.233** **Z–1.779** R2.4 F0.07;

Circular cutting in the clockwise direction in 2.4 mm radius; tool nose radius is taken into consideration.

㉕ G01 X32.0 **Z–22.74**; . . . . . Cutting to the specified position; tool nose radius is taken into consideration.

㉖ Z–41.0 F0.1;

㉗ G00 U–1.0 Z20.0; . . . . . Escape of cutting tool from the workpiece to execute I.D. cutting in the next process (cancel mode)

X200.0 Z150.0; . . . . . Retracting cutting tool from the workpiece at a rapid traverse rate

M01; . . . . . If optional stop is valid:

The machine stops temporarily.

If optional stop is invalid:

The machine does not stop and the program is continuously executed.

NOTE

① Underlined "____" coordinate values include offset data.

② Commands in ( ) identified by "*" are used only for the machine equipped with a transmission.

<O.D. finishing>

The programmed points ④, ⑤, ⑥, ⑦ and ⑧ in the part program are explained below.

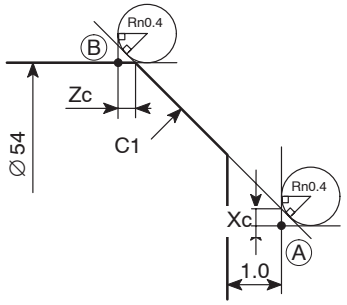

Rn: Tool nose radius

1) Point Ⓐ is taken at a point 1 mm away from the Z position where facing is carried out.

Calculate the X coordinate value of point Ⓐ.

X = D dia. – 2 × (C + Xc + a)
= 54.0 – 2 × (1.0 + 0.23 + 1.0)
= 49.54

D dia. : Outside diameter
C : Chamfer size
Xc : Offset data in the X-axis direction
a : Distance away from workpiece

Therefore, the coordinate values of point Ⓐ are: X49.54, W1.0(Z1.0)

2) Calculate the Z coordinate value of point Ⓑ.

Z = – (C + Zc)
= – (1.0 + 0.23) = –1.23
X = 54.0

C : Chamfer size
Zc : Offset data in the Z-axis direction

Therefore, the coordinate values of point Ⓑ are: X54.0 Z–1.23

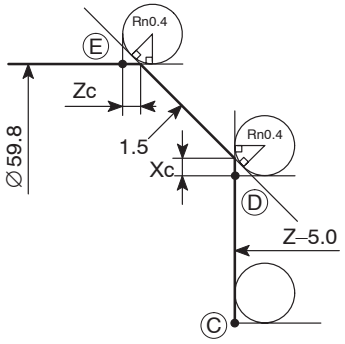

Rn: Tool nose radius

3) Point Ⓒ is not influenced by the tool nose radius. Specify the coordinate values found on the part drawing.

Therefore, the Z coordinate value of point Ⓒ is: Z–5.0

4) Calculate the X coordinate value of point Ⓓ.

X = D dia. – 2 × (C + Xc)
= 59.8 – 2 × (1.5 + 0.23)
= 56.34

D dia. : Outside diameter
C : Chamfer size
Xc : Offset data in the X-axis direction

Therefore, the coordinate value of point Ⓓ is: X56.34

5) Calculate the Z coordinate value of point Ⓔ.

Z = – (5.0 + C + Zc)
= – (5.0 +1.5 + 0.23) = –6.73
X = 59.8

C : Chamfer size
Zc : Offset data in the Z-axis direction

Therefore, the coordinate values of point Ⓔ are: X59.8, Z–6.73

<I.D. finishing>

The programmed points ㉓, ㉔ and ㉕ in the part program are explained below.

Calculating the coordinate values for arc and taper:

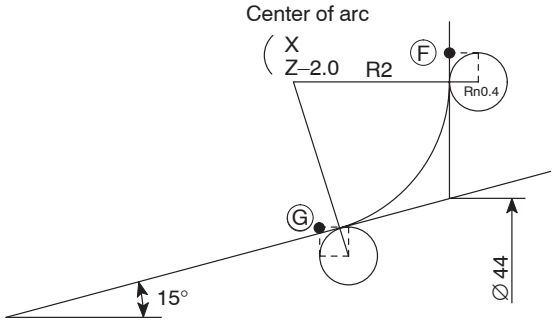

Rn: Tool nose radius

1) Calculate the X coordinate value of the center of arc R2.

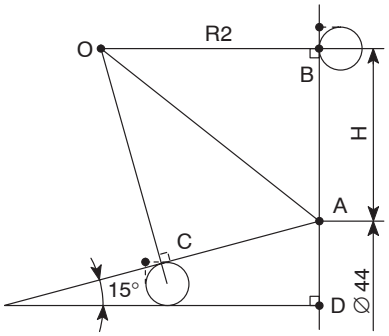

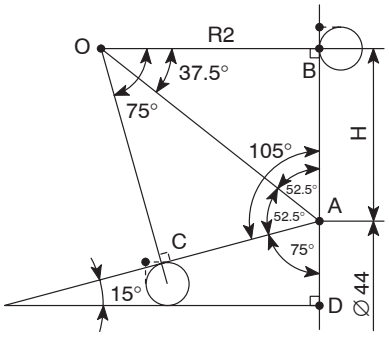

① Draw the line from the center O to point A.

Length H of side AB of a right angled triangle ΔABO should be calculated. For this calculation either ∠BOA or ∠BAO must first be calculated.

② ΔABO and ΔACO are congruent.

Therefore,

$\angle AOB = 37.5°$

$\angle OAB = 52.5°$

③ Now, calculate length H.

$$\tan 37.5° = \frac{H}{2}$$

$H = 2 \times \tan 37.5° = 1.5346$

The X coordinate value of the center of arc R2 can be calculated from “H”.

④ The X coordinate value of the center of arc R2 is calculated in the following manner:

$X = 44.0 + 2 \times H$ (value “H” must be doubled because X coordinate values are all expressed in diameter)

$= 44.0 + 2 \times 1.5346 = 47.069$

Therefore, the coordinate values of the center of arc R2 are: X47.069, Z–2.0

⑤ Next, calculate the X coordinate value of point Ⓕ.

$X = 47.069 + 2 \times Rn$
$= 47.069 + 2 \times 0.4 = 47.869$ Rn: Tool nose radius
$Z = 0$

Therefore, the coordinate values of point Ⓕ are: X47.869, Z0

2) Calculate the coordinate values of the center F of tool nose.

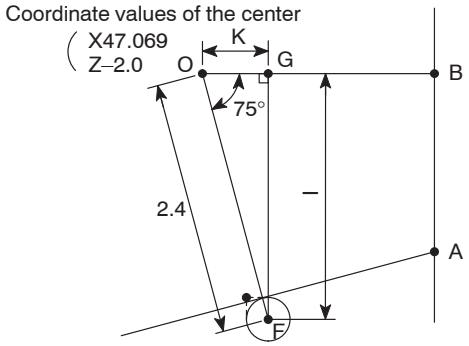

① Draw the line from F, the center of the tool nose, perpendicular to side BO. Take the point of intersection as G.

② In the right angled triangle ΔFGO, calculate length I and length K of side FG and side GO, respectively.

Hypotenuse OF = Radius R (specified on the drawing) + Tool nose radius
$= 2.0 + 0.4 = 2.4$

$\sin 75^\circ = \dfrac{I}{2.4}$ $I = 2.4 \times \sin 75^\circ = 2.318$

$\cos 75^\circ = \dfrac{K}{2.4}$ $K = 2.4 \times \cos 75^\circ = 0.621$

③ Calculate the coordinate values of the center F of the tool nose.

$X = 47.069 - 2 \times I$
$= 47.069 - 2 \times 2.318 = 42.433$
$Z = -(2.0 - K)$
$= -(2.0 - 0.621) = -1.379$

Therefore, the coordinate values of the center F of the tool nose are: X42.433, Z–1.379

④ Calculate the coordinate values of point Ⓖ.

$X = 42.433 + 2 \times Rn$
$= 42.433 + 2 \times 0.4 = 43.233$ Rn: Tool nose radius
$Z = -(1.379 + Rn)$
$= -(1.379 + 0.4) = -1.779$

Therefore, the coordinate values of point Ⓖ are: X43.233, Z–1.779

3) Calculate the coordinate values of point Ⓗ.

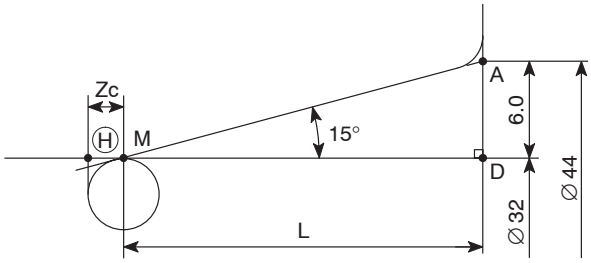

① The X coordinate value of point Ⓗ is the inner diameter to be finished.

$X = 32.0$

② Calculate length L.

$$\tan 15^\circ = \frac{6.0}{L} \qquad 6.0 = \frac{(44.0 - 32.0)}{2}$$

$$L = \frac{6.0}{\tan 15^\circ} = 22.3923$$

③ Find the offset data (Zc) for nose radius 0.4 mm at angle of 15°.

Zc = 0.3473 (to be found in the offset data table)

④ Calculate the Z coordinate value of point Ⓗ.

$Z = -(L + Zc)$

$= -(22.3923 + 0.3473) = -22.74$

Therefore, the coordinate values of point Ⓗ are: X32.0, Z–22.74

CHAPTER G
CUTTER RADIUS OFFSET

This chapter describes the cutter radius offset function.

The cutter radius offset means shifting of the tool paths to the right or left by the radius from the programmed paths.

This function is mainly used for pocket cutting or contouring with an end mill.

Since there are a number of tool patterns which will be used for actual machining and they will differ among users, it is not possible to explain all of the tool patterns in this manual. The explanation given in this chapter is concentrated on the basic programming so that the readers will be able to acquire basic knowledge of the cutter radius offset function.

For more details, please refer to the instruction manuals supplied by the NC unit manufacturer.

CONTENTS

G : CUTTER RADIUS OFFSET

1. General G–1

2. Requirement for Using the Cutter Radius Offset Function G–3

3. Technical Terms Used in the Explanation of the Cutter Radius Offset Function G–4
   - 3.1 Start-up G–5
   - 3.2 Offset Mode G–6
   - 3.3 Cancel Mode G–8

4. General Cautions on the Offset Function G–9
   - 4.1 If a Wall Lies at the End of Cutting G–9
   - 4.2 Positive (+) and Negative (–) Designation for Cutter Radius Offset Amount and Tool Paths G–11
   - 4.3 Overcut in the Cutter Radius Offset Mode G–11

5. Example Program G–15

1. General

The cutter radius offset means shifting of the tool paths to the right or left by the radius from the programmed paths.

NOTE The cutter radius offset function can be used only for models with the Y-axis specification. This function cannot be used for other machine models.

Generally, when cutting a pocket or carrying out contouring operation using an end mill, the cutter radius offset function is used to finish the workpiece in the shape specified in the drawing.

How the shape in Fig. 1 is finished using the cutter radius offset function is briefly explained below.

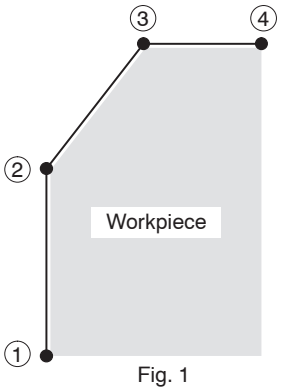

Fig. 1

Specify the required shape to be finished in the program:

① → ② → ③ → ④

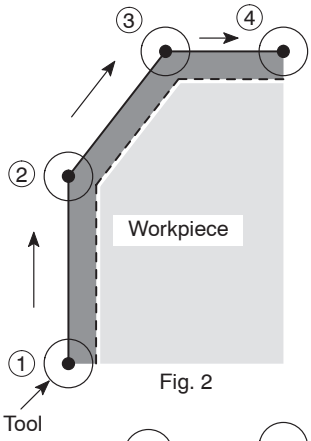

Fig. 2

Since the center of a cutting tool moves along the defined paths, the cutting tool moves along the paths shown in Fig. 2 if the program is created without using the cutter radius offset function.

The workpiece is finished to the shape indicated by broken line in Fig. 2, which is smaller than the required shape indicated in Fig. 1 by the radius of the cutting tool.

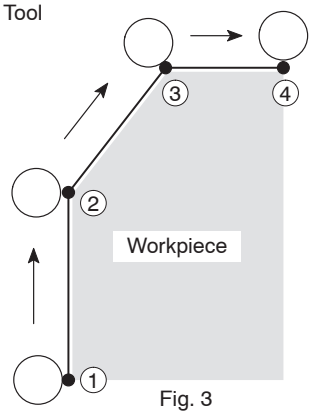

Fig. 3

To shift the tool paths from the programmed paths, input the radius of the cutting tool as the cutter radius offset data for the R column at the tool geometry offset data setting screen.

If the cutter radius offset function is used, the tool paths are shifted outside from the programmed paths by the input offset amount as shown in Fig. 3 to finish the required shape.

In this manner, by shifting the tool paths from the programmed paths by using the cutter radius offset function, it is not necessary to obtain the coordinate values using complicated calculation to generate the tool paths to finish the workpiece to the required shape.

COMMAND

1. Cutter radius offset in the XY plane

G17 G01(G00) G41(G42) X_ Y_ F_ ;
G40 G01(G00) X_ Y_ I_ J_ F_ ;

2. Cutter radius offset in the YZ plane

G19 G01(G00) G41(G42) Y_ Z_ F_ ;
G40 G01(G00) Y_ Z_ J_ K_ F_ ;

- G17, G19 . . . . . Selects the plane where cutter radius offset is executed.
- G01(G00) . . . . . Selects the interpolation mode in which the cutter radius offset function is executed.

  G00 . . . . . Rapid traverse

  G01 . . . . . Cutting feed
- G41 . . . . . Calls the cutter radius offset mode (offset to the left).

  The tool paths are generated by shifting the programmed paths to the left in reference to the tool advancing direction by the specified offset amount.

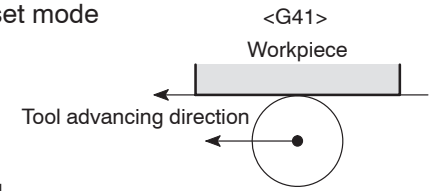

- G42 . . . . . Calls the cutter radius offset mode (offset to the right).

  The tool paths are generated by shifting the programmed paths to the right in reference to the tool advancing direction by the specified offset amount.

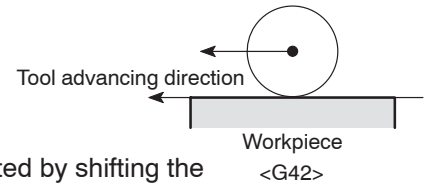

- G40 . . . . . Cancels the cutter radius offset mode.
- X, Y, Z . . . . . Specifies the coordinate values of the end point.
- I, J, K . . . . . The direction of the workpiece shape defined in the following block. The I, J, and K commands are specified in incremental values.
- F . . . . . Specifies feedrate.

CAUTION

The programmer must thoroughly understand the nature of the G41 and G42 functions as well as the tool paths to be generated. If the G41 and G42 commands are used improperly, the cutting tool might be fed into or hit against the workpiece to be machined to cause breakage of the cutting tool or defective machining.

2. Requirement for Using the Cutter Radius Offset Function

To use the cutter radius offset function (G40, G41, or G42), how the cutter radius offset data is input must be understood correctly.

<Input of cutter radius offset amount>

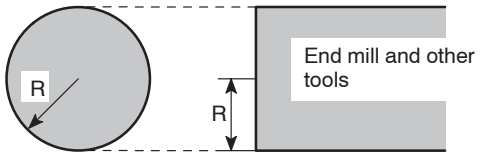

Cutter radius offset amount (Cutter radius value)

To use the cutter radius offset function (G41, G42), it is necessary to set the tool radius for the R column at the tool geometry offset data setting screen.

Set the cutter radius corresponding to the offset number to be specified in T code.

3. Technical Terms Used in the Explanation of the Cutter Radius Offset Function

The technical terms special to the cutter radius offset function and items to be observed when using the cutter radius offset function are explained below.

Term	Description
Start-up	The first block in which the G41 or G42 command is specified In the start-up operation, the center of the cutting tool is offset at the stopped position in right angle to the movement in the next block by its radius.
Offset mode	The mode in which the tool nose radius offset function is valid after the start-up
Cancel mode	The state in which the tool nose radius offset function is canceled by executing G40 The cancel mode starts from the end point of the block that precedes the G40 block. The center of the cutting tool is positioned right angles to the tool path programmed in the preceding block.

Ex.

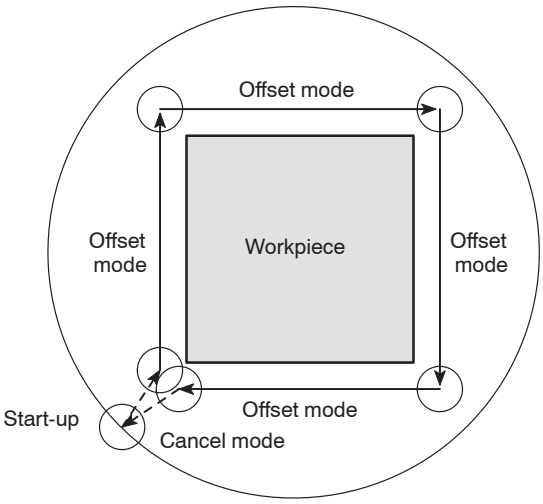

⋮

G17 G41(G42) G00 X_ Y_ ; . . . . . Start-up

NOTE In the case of the operation as shown in the illustration above, offset should be made to the left and, therefore, the G41 command should be used.

G01 X_ Y_ F_ ;
X_ Y_ ;
X_ Y_ ; . . . . . Offset mode
X_ Y_ ;
G40 G00 X_ Y_ ; . . . . . Cancel mode

⋮

3.1 Start-up

The first block in which the G41 or G42 command is specified is called the start-up block.

In the start-up operation, the center of the cutting tool is offset at the stopped position in right angle to the movement in the next block by its radius.

Ex.

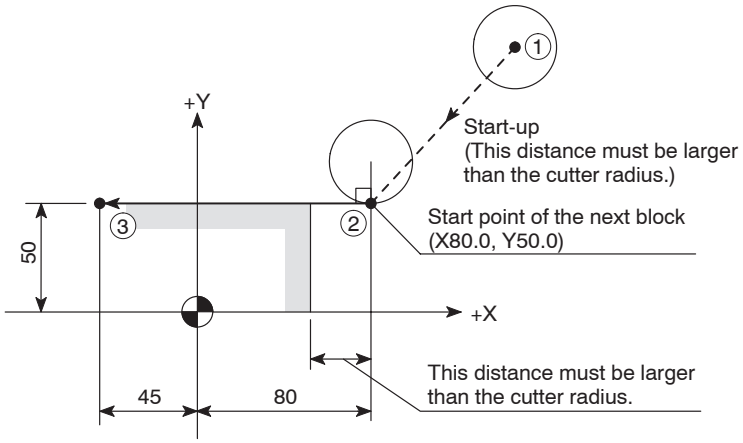

⋮

G00 X100.0 Y100.0; . . . . . ①

G17 G42 X80.0 Y50.0; . . . . . ②

G01 X–45.0 F_ ; . . . . . ③

⋮

NOTE When specifying the start-up, the following conditions must be satisfied.

– The start-up block must include an axis movement command; the called distance must be larger than the offset amount (radius of a tool).

– The start-up must be specified in the G00 or G01 (linear motion) mode.

Do not specify the start-up in the G02 or G03 mode. If the start-up is specified in such a mode, an alarm is generated, the corresponding alarm message (No. 034) is displayed on the screen and the machine stops operating.

3.2 Offset Mode

The mode in which the cutter radius offset function is valid, after the start-up, is called the offset mode.

1) Behavior when the direction of tool offset (right, left) is not changed

   The tool moves along the workpiece shape with its periphery in contact with the shape.

Ex.1

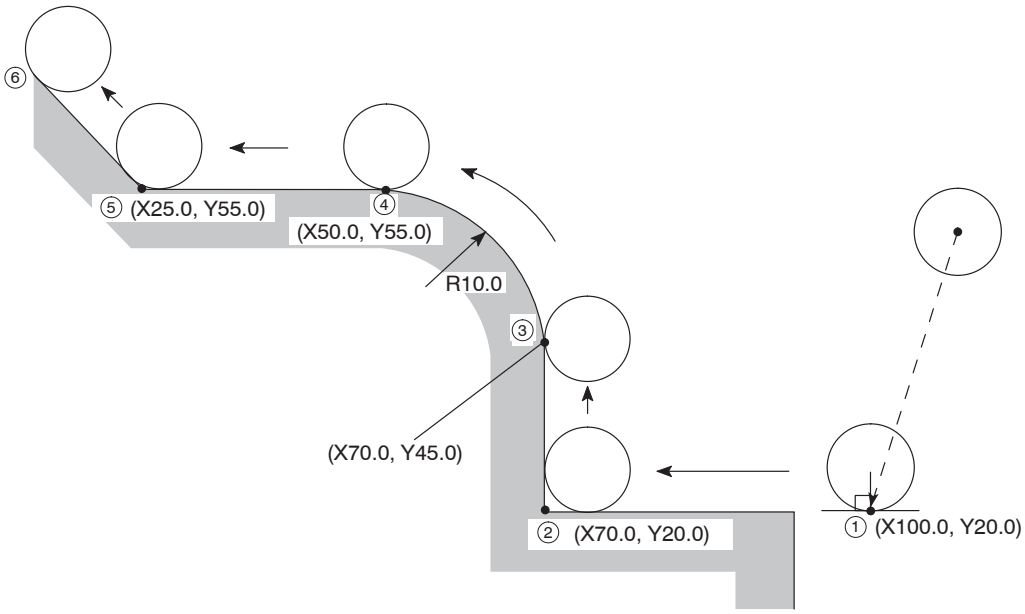

⋮

G17 G42 G00 X100.0 Y20.0; . . . . . ① (Start-up)
G01 X70.0 F200; . . . . . ②
Y45.0; . . . . . ③
G03 X50.0 Y55.0 R10.0; . . . . . ④
G01 X25.0; . . . . . ⑤
X_ Y_ ; . . . . . ⑥

Offset mode

⋮

NOTE ① At the start-up and in the offset mode, two blocks of commands are buffered. In the offset mode, blocks not containing an axis movement command, a block only with an M command or G04 dwell block, for example, must not be specified continuously. A block containing 0 axis movement is not allowed, either. If such blocks are specified, it will cause excessive or insufficient cutting since two blocks of commands cannot be buffered. It will also cause overload to the tool and the tool might be damaged.

NOTE ② If an attempt is made to cut the inside of an arc whose radius is smaller than the radius of the tool or to cut a groove whose width is smaller than the radius of the tool, an alarm message is displayed to avoid excessive cutting. If this occurs while the program is executed in the single block mode, excessive cutting occurs to produce a defective workpiece since the program is executed to the end of the block causing the alarm before it stops.

③ Do not change the plane with G17 or G19 in the offset mode.
If changed, an alarm occurs, and an alarm message (No. 037) is displayed on the screen and the machine stops operating.

2) Behavior when the direction of tool offset (right, left) is changed

If the direction of offset changes in a program, as illustrated below, i.e., if the G code calling the cutter offset function changes between G41 and G42, the periphery will come into contact with the workpiece shape that is defined in the two consecutive blocks where the G code changes from G41 to G42, or vice versa.

Ex.2

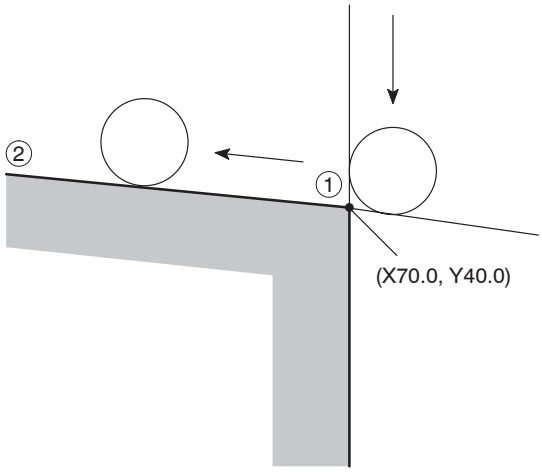

⋮

G17 G41 X70.0 Y60.0;

Y40.0; ..... ①

G42 X_ Y_ ; ..... ②

⋮

CAUTION Changing the G code mode between G41 and G42 cannot be specified in the start-up and the next block.

3.3 Cancel Mode

The G40 command, specified in the offset mode, cancels the cutter radius offset function.

The cancel mode starts from the end point of the block that precedes the G40 block. The center of the cutting tool lies at right angles to the tool path programmed in the preceding block.

Ex.

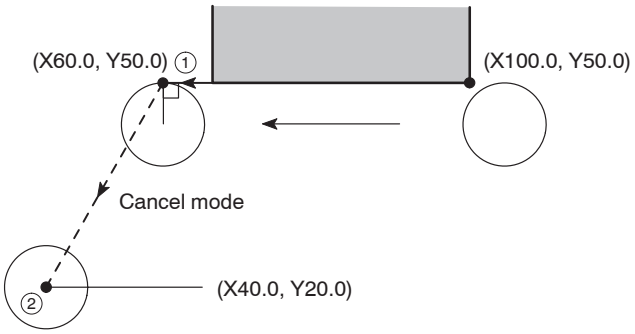

⋮

G17 (G41) X100.0 Y50.0;
X60.0 . . . . . ①
G40 G00 X40.0 Y20.0; . . . . . ② (Cancel mode)
⋮

NOTE In the cancel mode, the following items must be carefully attended to:

– The cutter radius offset function is canceled by pressing the RESET (RESET) key on the operation panel in addition to the execution of the G40 command.

– The cancel command must be specified in the G00 or G01 (linear motion) mode.

Do not specify the cancel command in the G02 or G03 mode. If the cancel command is specified in such a mode, an alarm occurs, the corresponding alarm message (No. 034) is displayed on the screen and the machine stops operating.

4. General Cautions on the Offset Function

4.1 If a Wall Lies at the End of Cutting

If the workpiece wall lies in a direction independent of the direction of tool motion specified by the commands in the G40 block:

Specify the workpiece wall's direction (workpiece shape) with vectors (I, J). Use incremental values for I and J commands. Note that value I must be specified in a radial value.

NOTE The following gives an explanation assuming that the cutter radius offset function is used in the XY plane (G17). When executing the cutter radius offset function in the YZ plane (G19), specify the direction of wall (workpiece shape) using vector (J, K).

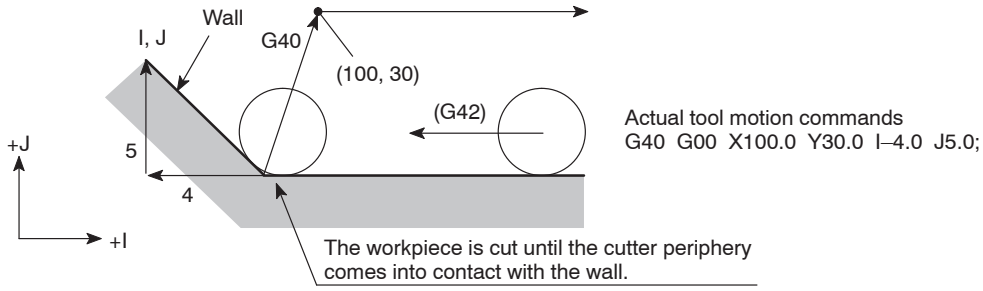

NOTE ① The workpiece is cut until the cutter periphery comes into contact with the wall. The I and J commands, used to define the vectors that represent the workpiece wall direction, should be specified in the G40 block that appears first after entry into the offset mode.

- Valid

```
G42 X_ Y_ ;
X_ Y_ ;
      ⋮
      ⋮
      ⋮     Offset mode
      ⋮
      ⋮
      ⋮
G40 G00 X_ Y_ I_ J_ ;
```

- Invalid

```
G42 X_ Y_ ;
      ⋮
      ⋮     Offset mode
      ⋮
G40 X_ Y_ ;
      ⋮
      ⋮     Cancel mode
      ⋮
G40 G00 X_ Y_ I_ J_ ;
                Ignored
```

② If "I_ J_" is not specified in the G40 block, the offset mode cancel point is set at the end point of the preceding block; at this end point, the center of the tool lies at right angles to the tool path generated by the commands in the preceding block. This causes an overcut on the wall.

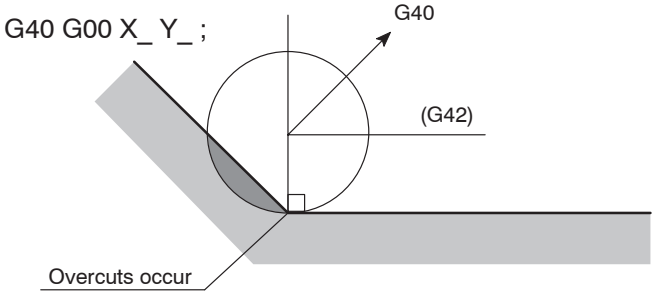

Ex. **Calculating the direction of wall (workpiece shape)**

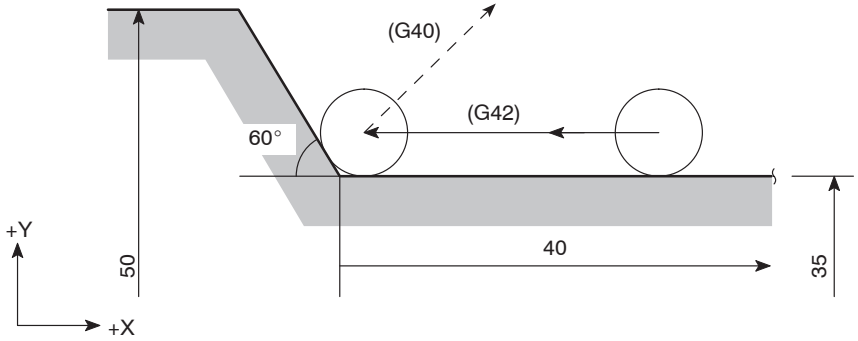

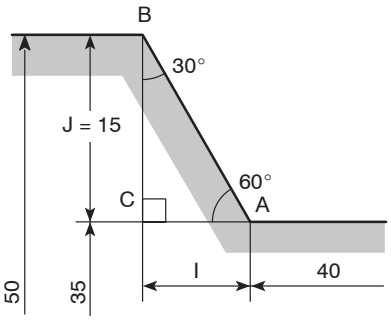

① Value “J” is indicated below, based on the illustration on the left.

J = 15

Because it is measured in the positive direction of Y, the designation should be “J15.0”.

Next, value “I” is calculated as:

I = AC = 15 × tan30° = 8.660

Because it is measured in the negative direction on the X-axis, the designation should be “I–8.66”.

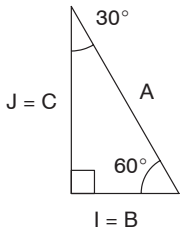

② Since I and J commands are used to define the direction of the wall, the ratio between the sides of a triangle may be used instead of calculating actual lengths.

The ratio of three sides of the triangle given on the left is known as

A:B:C = 2:1:$\sqrt{3}$ (= 1.73)

Therefore, the designation should be “I–1.0 J1.73”.

I and J commands may be specified in either method as described above.

⋮

G01 X–40.0;

G40 G00 X–10.0 Y100.0 **I–8.66 J15.0;**

↑

(**I–1.0 J1.73**)

Interchangeable

4.2 Positive (+) and Negative (–) Designation for Cutter Radius Offset Amount and Tool Paths

Generally, a program is created assuming that the cutter radius offset amount is set in a positive value.

If an offset amount is set in a negative value, tool paths are generated as if G41 and G42 are entirely exchanged with each other. The paths having been generated outside the programmed profile will be generated inside the profile and those having been generated inside the programmed profile will be generated outside the profile.

If a negative value is set for the offset amount while the tool paths as shown in Fig. 1 are specified in a program, the cutting tool moves along the paths shown in Fig. 2.

Conversely, if a negative value is set for the offset amount when the tool paths shown in Fig. 2 are specified in a program, the cutting tool moves along the paths shown in Fig. 1.

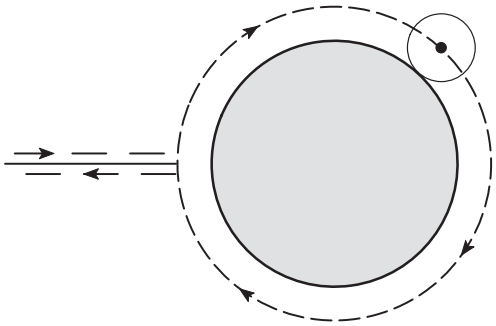

Fig. 1

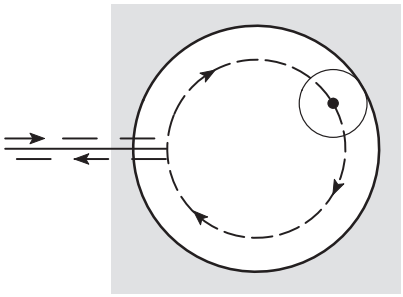

Fig. 2

4.3 Overcut in the Cutter Radius Offset Mode

1) Cutting the inside of arc whose radius is smaller than the cutter radius

   If the specified arc radius is smaller than the cutter radius, offsetting inside the arc causes overcut.

   The alarm message is displayed on the screen just after the start of the block which precedes the block containing the arc command, and the machine stops.

NOTE If a single block function is called during the execution of the preceding block, the axes are fed to the end point of that block, causing overcuts.

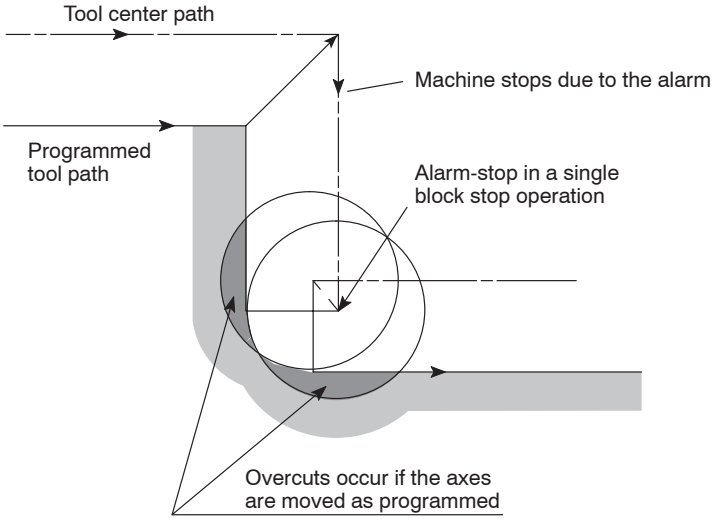

2) Cutting a groove whose width is narrower than the cutter radius

If the tool path is generated in the direction opposite to the programmed path due to offsetting, it causes overcut.

The alarm message is displayed on the screen just after the start of the block which precedes such a block, and the machine stops.

NOTE If the single block function is called during the execution of the preceding block, the axes are fed to the end point of that block, causing overcuts.

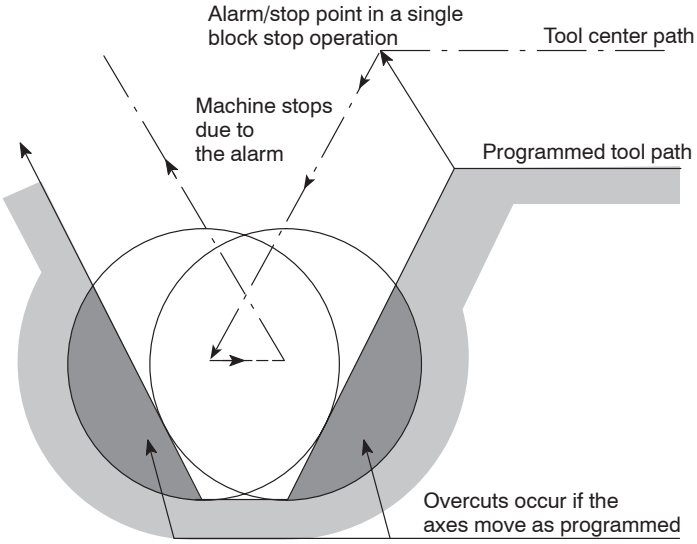

3) Cutting an arc-shaped step whose height is smaller than the cutter radius

The tool path to be generated in ordinary offset processing might be reversed at the stepped portion.

In such a case, the first vector is ignored and the tool path is generated for a second vector that will move along a straight line.

Although the operation is continued without causing an alarm, undercut portion is left in the workpiece.

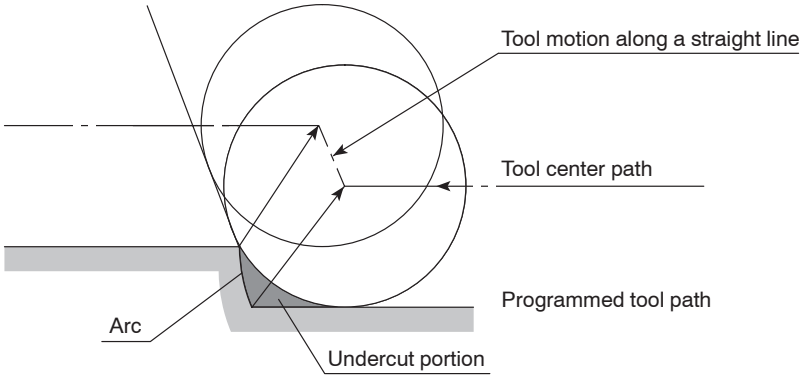

4) No X- and Y-axis movement is specified in more than two blocks

When the XY plane is selected, for example, the cutter radius offset function is valid only for the X- and Y-axes.

NOTE The cutter radius offset function is valid only for the Y- and Z-axes in the YZ plane.

If there are two or more blocks, which contains neither X- nor Y-axis movement commands, given in succession, overcut may occur since buffering is not possible.

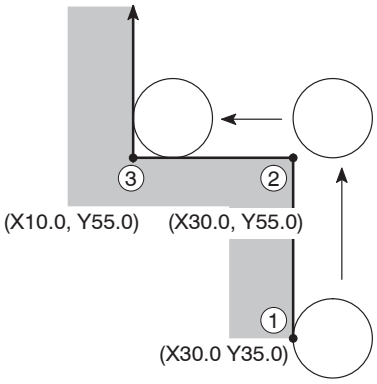

⋮

(G42 mode)
X30.0 Y35.0; . . . . . ①
Y55.0; . . . . . ②
X10.0; . . . . . ③

Offset is made correctly because two blocks of commands can be buffered

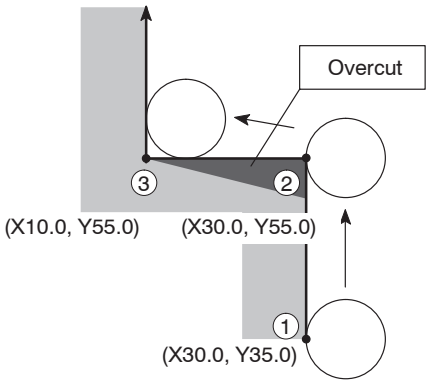

⋮

(G42 mode)
X30.0 Y35.0; . . . . . ①
Y55.0; . . . . . ②
M_ ;
Z–_ ;
No X- or Y-axis movement commands in two or more blocks
X10.0; . . . . . ③

Overcuts occur as illustrated above. This is because the center of the tool is positioned, when the preceding block ② is executed, at the right angle to the tool path called by the commands in this block.

Pay attention when a sub-program is called from a main program.

Main program

```
      ⋮
G17 G41 G01 X_ Y_ ;
M98 P1; . . . . . ①
      ⋮
```

Sub-program (O0001)

```
O0001; . . . . . ②
X_Y_ ;
X_Y_ ;
      ⋮
M99;
```

By the call of a sub-program from a main program, two blocks ① and ② are executed in succession; these blocks do not contain X- or Y-axis movement commands.

Therefore, the program should be created in the following manner.

Main program

```
      ⋮
X_ Y_ ;
M98 P1;
      ⋮
```

Sub-program (O0001)

```
O0001;
G17 G41 G01 X_ Y_ ;
X_ Y_ ;
      ⋮
G40 X_ Y_ ;
M99;
```

5. Example Program

An example of program where the cutter radius offset function (G40, G41, G42) is used is shown below.

Use this program for your reference when creating a program.

Ex. **Programming using G40, G41, and G42**

To carry out accurate circle cutting (I.D.)

The example program is created for cutting the I.D. of the circle shown below using a 10 mm diameter end mill.

When cutting the I.D. of a circle, approach is generally made along an arc (③ → ④, in this example) to the cutting start point D. After the completion of circle cutting, escape from the cut circle is made along an arc (④ → ⑤), in this example.

This approach and escape are necessary to avoid an overcut.

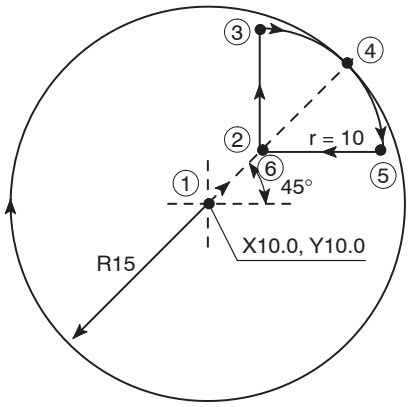

<Machining sequence>

① → ② → ③ → ④ → (circle cutting) → ④ → ⑤ → ⑥

<Reason of setting of r = 10>

Arcs used for approach (③ → ④) and escape (④ → ⑤) must satisfy the following conditions.

Cutter radius < r (approach/escape circle radius) < R (radius of circle to be machined)

5 < r < 15

From the requirement indicated above, r is determined to be “20”.

(r = 10)

<Calculating the coordinate values of points ②, ③, ④, ⑤, and ⑥>

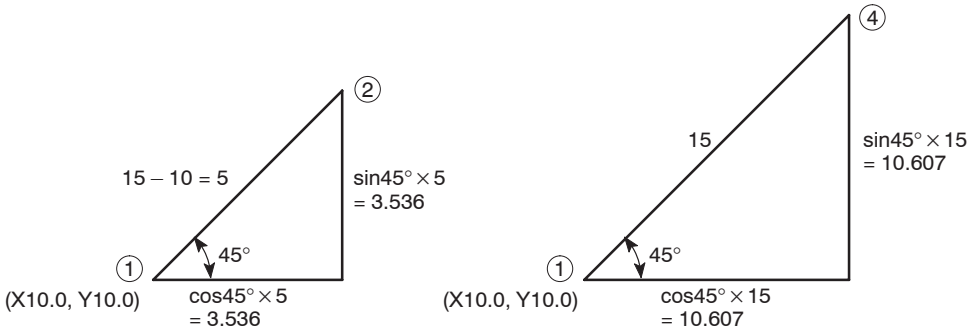

Point ②, ⑥ X = 10.0 + (3.536 × 2) = 17.072
Y = 10.0 + 3.536 = 13.536

Point ③ X = 17.072 (X coordinate value of point ②)
Y = 13.536 + r
= 13.536 + 10 = 23.536

Point ④ X = 10.0 + (10.607 × 2) = 31.214
Y = 10.0 + 10.607 = 20.607

Point ⑤ X = 17.072 + (r × 2)
= 17.072 + (10 × 2) = 37.072
Y = 13.536 (Y coordinate value of point ②)

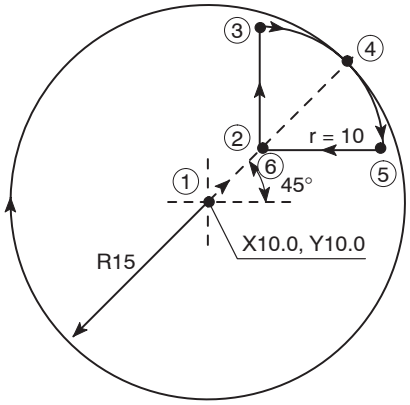

O0001;
N1;
G98;
M45;
(G28 U0 W0;)
G28 H0;
(M321;)
G00 T0101;
G97 S500 M13;
G00 X10.0 Y10.0; ..... ①
G01 Z–_ F100;
1) G17 X17.072 Y13.536; ..... ②
2) **G42 Y23.536;** ..... ③
3) G02 X31.214 Y20.607 R10.0; ..... ④
4) I–21.214 J–10.607; ..... (Full circle)
5) X37.072 Y13.536 R10.0; ..... ⑤
6) **G40 G01 X17.072;** ..... ⑥
G00 X10.0 Y10.0;
Z20.0;
(G28 U0 W0;)
M05;
(M320;)
M01;
⋮

NOTE Commands in ( ) should be specified only for the Y-axis specification TL series machines.

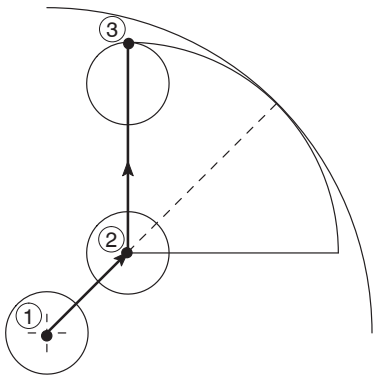

1) Moving at point ② at feedrate of 100 mm/min
2) ③ Start-up
   - G42 . . . . . Offset to the right in reference to the tool advancing direction

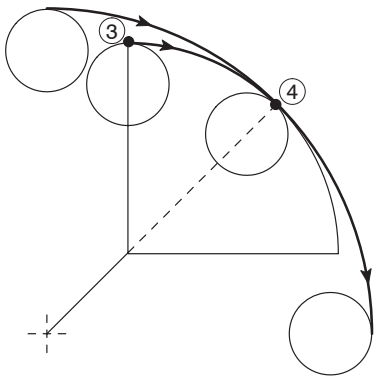

3) ③ → ④

   Approach along an arc to cut a circle
4) Full circle

   Execute cutting of a circle

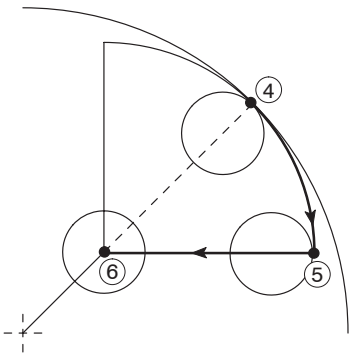

5) ④ → ⑤

   Escape from a circle along an arc
6) ⑥ Cancel mode

   In the block just preceding the cancel mode block, positioning at the end point ⑤ is made at a position located right angle to the tool path in that block. After that, positioning is made at (X17.072, Y13.536).

CHAPTER H
MULTIPLE REPETITIVE CYCLES

This chapter describes the multiple repetitive cycles.

Using a multiple repetitive cycle, roughing processes that require several blocks of commands can be defined by a single block of commands preceded by a G code calling a multiple repetitive cycle, and blocks that define the finished shape. The tool paths for rough cutting cycles are automatically determined.

When specifying a multiple repetitive cycle, standard format and F15 format are used. If the command format differs between standard format and F15 format, the difference is explained in the related G code items. Pay sufficient care to the difference when creating a program.

For details, refer to the instruction manuals provided by the NC manufacturer.

CONTENTS

H : MULTIPLE REPETITIVE CYCLES

1. General H–1

2. G71 O.D./I.D. Rough Cutting Cycle H–4

3. G72 Rough Facing Cycle H–9

4. G73 Closed-loop Cutting Cycle H–14

5. Cautions on Using the G71, G72, and G73 Cycles H–18

6. G70 Finishing Cycle H–21

7. G74 Face Cut-off, Grooving Cycle and Deep Hole Drilling Cycle H–23

8. G75 O.D./I.D. Grooving Cycle, Cut-off Cycle H–27

9. G76 Automatic Thread Cutting Cycle H–31
   - 9.1 Infeed Mode H–34
   - 9.2 Cautions on the G76 Automatic Thread Cutting Cycle H–34
   - 9.3 The Relationship between Depth of Cut for the First Path and the Number of Thread Cutting Paths to be Generated (Fixed Metal Removal Rate and Straight Feed along the Thread Face) H–36
     - 9.3.1 Calculating the Number of Thread Cutting Paths when the Depth of Cut for the First Path is Given . . . H–36
     - 9.3.2 Calculating the Depth of Cut for the First Path when the Number of Thread Cutting Paths is Given H–36

1. General

The multiple repetitive cycles are provided to simplify programming for O.D. and I.D. rough cutting and finishing processes, etc.

One of the capabilities the multiple repetitive cycle function supports is the automatic generation of the rough cutting paths when the finish shape is defined.

The table below lists the multiple repetitive cycles:

G71	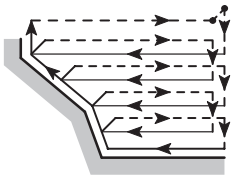	O.D./I.D. rough cutting cycle (Cutting along the Z-axis, infeed along the X-axis) In O.D./I.D. cutting operation, when the finish shape is defined in the program, the workpiece is machined to the shape which includes a finishing allowance on the defined shape. The tool paths used for rough cutting are automatically determined.
G72	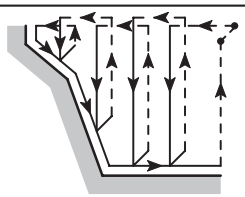	Rough facing cycle (Cutting along the X-axis, infeed along the Z-axis) In facing operation, when the finish shape is defined in the program, the workpiece is machined to the shape which includes a finishing allowance on the defined shape. The tool paths used for rough cutting are automatically determined.
G73	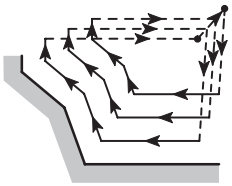	Closed-loop cutting cycle The workpiece is machined to the defined shape by executing the fixed pattern repeatedly.
G70	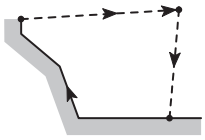	Finishing cycle After completing a rough cutting cycle for O.D., I.D., or end face, called by the G71, G72, or G73 command, the shape is finished by the G70 cycle.
G74	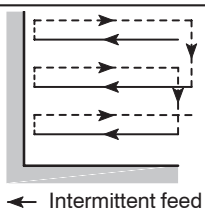	Face cut-off cycle, face grooving cycle, deep hole drilling cycle Infeed is made along the Z-axis intermittently. If a command for the depth of cut along the X-axis is omitted, the deep hole drilling cycle is called.
G75	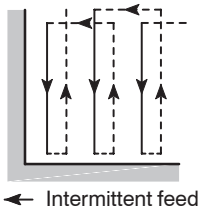	O.D./I.D. grooving cycle, O.D. cut-off cycle Infeed is made along the X-axis intermittently. If a command for the depth of cut along the Z-axis direction is omitted, the O.D. cut-off cycle is called.
G76	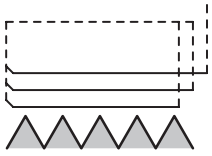	Multiple thread cutting cycle The thread cutting pattern is repeated by gradually infeeding the cutting tool.

To explain how the multiple repetitive cycle function simplifies programming, the rough cutting cycle for the shape illustrated below is programmed with and without using the G71 cycle.

NOTE In the programming, tool nose radius is assumed to be “0”.

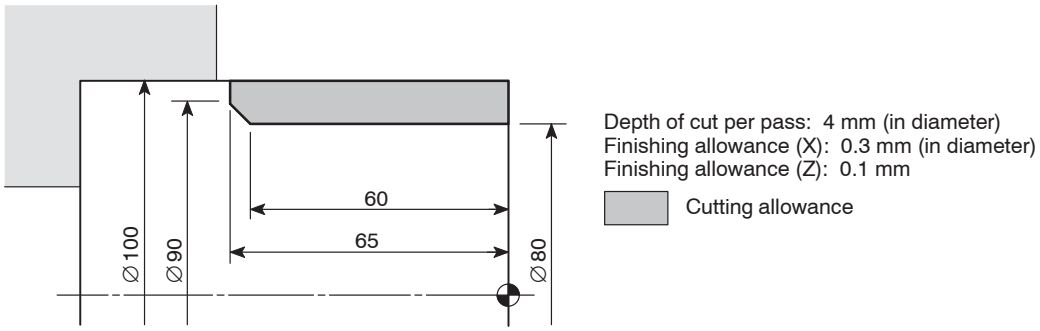

<Programming without using the multiple repetitive cycle>

```
O0001;
     ⋮
G00 X96.0 Z20.0 M08; .... ①
G01 Z2.0 F2.0; ..... ②
Z–64.9 F0.3; ..... ③
G00 U1.0 Z2.0; ..... ④
X92.0; ..... ⑤
G01 Z–64.9; ..... ⑥
G00 U1.0 Z2.0; ..... ⑦
X88.0; ..... ⑧
G01 Z–63.9; ..... ⑨
G00 U1.0 Z2.0; ..... ⑩
X84.0; ..... ⑪
G01 Z–61.9; ..... ⑫
G00 U1.0 Z2.0; ..... ⑬
X60.3; ..... ⑭
G01 Z–60.0; ..... ⑮
X70.0 Z–64.9; ..... ⑯
X102.0; ..... ⑰
G00 U1.0 Z10.0 M09; ..... ⑱
X200.0 Z100.0; ..... ⑲
     ⋮
```

<Programming using the multiple repetitive cycle (G71)>

```
O0001;
     ⋮
   G00 X100.0 Z20.0 M08; ..... ①
   G01 Z2.0 F2.0 ..... ②
1) G71 U2.0 R0.5;
   G71 P100 Q200 U0.3 W0.1 D2.0 F0.3;
2) N100 G00 X80.0; ..... ③
   G01 Z–60.0; ..... ④
   X90.0 Z–65.0; ..... ⑤
3) N200 X102.0; ..... ⑥
   G00 X200.0 Z100.0 M09; ..... ⑦
     ⋮
```

1) Executes the O.D. rough cutting cycle (G71).
   - G71 .... Calls the O.D. rough cutting cycle.
   - U2.0 .... Specifies the depth of cut (in radius).
   - R0.5 .... Specifies the relief amount (in radius).
   - P100 ... Specifies the sequence number of the first block of the blocks that define the finish shape of the workpiece.
   - Q200 ... Specifies the sequence number of the last block of the blocks that define the finish shape of the workpiece.
   - U0.3 .... Specifies the finishing allowance in the X-axis direction (in diameter).
   - W0.1 ... Specifies the finishing allowance in the Z-axis direction.
   - F0.3 .... Specifies the feedrate.

2) to 3)
   The blocks from sequence number N100 to N200 define the finish shape.

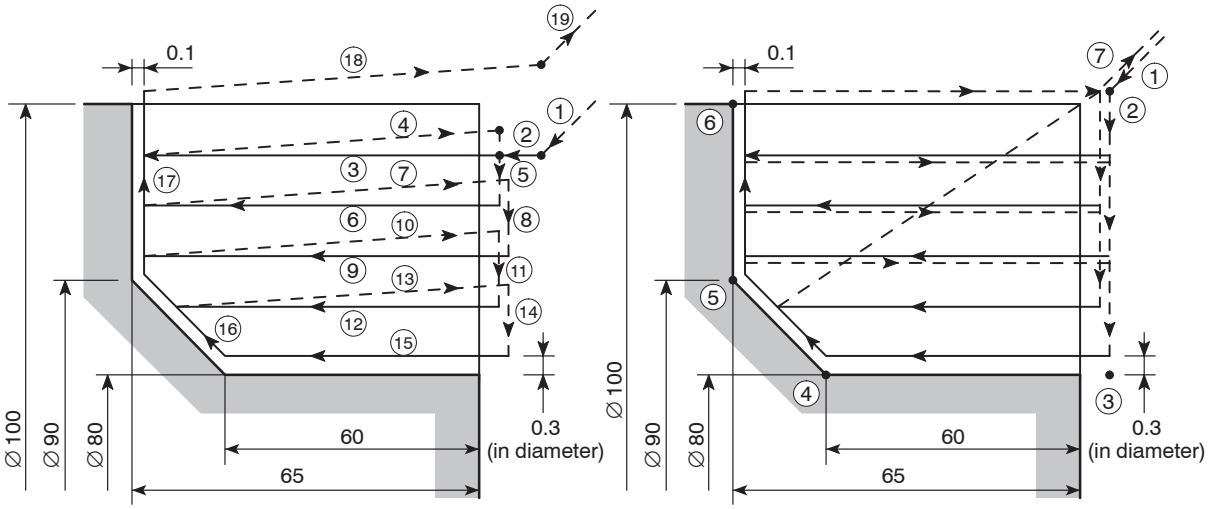

By specifying the data for finishing such as finishing allowance and depth of cut in the G71 block, the cycles as indicated above are executed by the commands written in the seven lines of the program (① to ⑦).

From the comparison of the two programs shown above, it is known that the programming is simplified by using the multiple repetitive cycle function.

Since programming is simplified, programming error can be reduced accordingly.

2. **G71** O.D./I.D. Rough Cutting Cycle

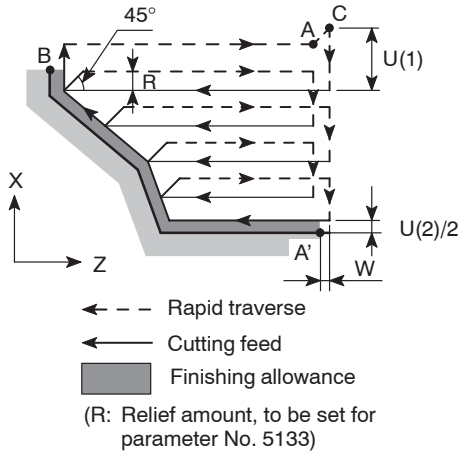

The O.D./I.D. rough cutting cycle is used for workpieces which have monotonously varying shapes both in the X- and Z-axis directions.

When the finish shape (A → A' → B) is defined in a program, rough cutting paths are automatically generated leaving allowance of U/2 and W for finishing on the workpiece circumference and end face, respectively. The depth of cut for rough cutting cycle is D.

Generally, a finishing cycle called by the G70 command is used to finish the workpiece after completing the G71 O.D./I.D. rough cutting cycle.

COMMAND

1. Standard format (setting made before shipping the machine)

G71 U(1) R_ ;
G71 P_ Q_ U(2) W_ F_ S_ T_ ;

2. F15 format

G71 P_ Q_ U(2) W_ I_ K_ D_ F_ S_ T_ ;

- G71 . . . . . Calls the O.D./I.D. rough cutting cycle.
- U(1) . . . . . Specifies depth of cut (X-axis direction) (unsigned, in radius).

  NOTE Since this command is modal, it remains valid until it is replaced with the value specified next. This value can also be set for parameter No. 5132; the value set for the parameter is changed according to the value specified in the program.

- R . . . . . Specifies the relief amount (in radius).

  NOTE Since this command is modal, it remains valid until it is replaced with the value specified next. This value can also be set for parameter No. 5133; the value set for the parameter is changed according to the value specified in the program.

- P . . . . . Specifies the sequence number of the first block of the blocks that define the finish shape of the workpiece.
- Q . . . . . Specifies the sequence number of the last block of the blocks that define the finish shape of the workpiece.
- U(2) . . . . . Specifies the distance and direction of the finishing allowance in the X-axis direction (in diameter).
- W . . . . . Specifies the distance and direction of the finishing allowance in the Z-axis direction.

- I . . . . . Specifies the distance and direction of rough finishing allowance in the X-axis direction (in radius).

  NOTE The command is disregarded even if specified.

- K . . . . . Specifies the distance and direction of rough finishing allowance in the Z-axis direction.

  NOTE The command is disregarded even if specified.

- D . . . . . Specifies the depth of cut (X-axis direction) (unsigned, in radius).

  NOTE Input of a decimal point is not allowed.

- F . . . . . Specifies feedrate to be adopted for the G71 cycle.
- S . . . . . Specifies spindle speed control to be adopted for the G71 cycle.

  NOTE In the G96 mode: The value specifies cutting speed (m/min).

  In the G97 mode: The value specifies spindle speed (min^{-1}).

- T . . . . . Specifies a tool number and the tool offset number in a four digit number.

NOTE ① If no F, S, or T command is specified, the command which has been specified preceding the G71 block is valid.

② In the first block of the blocks defining the finish shape, as specified by the P command in the “G71 P_ Q_ ...;” block, take the following items into consideration.

– Always specify either the G00 or G01 command. If neither G00 nor G01 command is specified, an alarm message (No. 065) is displayed on the screen.

G00 . . . Infeed in the G71 cycle is made at a rapid traverse rate.

G01 . . . Infeed in the G71 cycle is made at a cutting feedrate.

NOTE

③ The workpiece shape must be monotonously increasing or decreasing pattern in the Z-axis directions as shown in the illustration below.

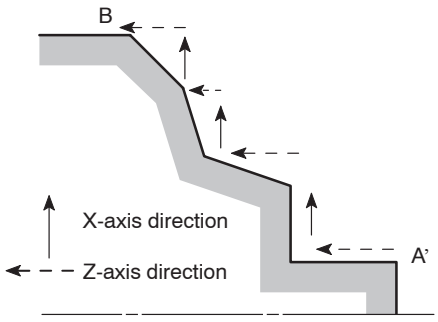

Without the R1 command, the pattern to be generated must monotonously increases or decreases both in the X- and Z-axis directions as illustrated on the left.

In this case, the first block of the blocks used to define the finish shape must contain only either X(U) or Z(W) axis.

G71 U2.0 R0.5;
G71 P100 Q200 U0.3 W0.1 F0.3;
N100 G00 **X(U)**_;
⋮

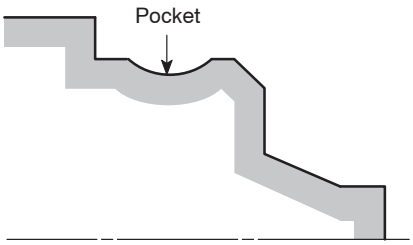

Even if the finish shape is not a monotonously increasing or decreasing pattern, machining is possible if the number of pockets included in the shape is 10 or less.

In this case, the first block of the blocks used to define the finish shape must contain both X(U) and Z(W) axes. Even if either of them does not move in the first block, it is necessary to specify U0 or W0. This function is optional for the SL-25E.

G71 U2.0 R0.5;
G71 P100 Q200 U0.3 W0.1 F0.3;
N100 G00 **X(U)_ Z(W)**_;
⋮

④ For O.D. rough cutting cycle, it is necessary to move the tool along the X-axis to a point which is larger than the workpiece material diameter before specifying the G71 command.

For I.D. rough cutting cycle, it is necessary to move the tool along the X-axis to a point which is smaller than the workpiece material inside hole diameter before specifying the G71 command.

Ex. **Programming using G71**

To finish the shape illustrated below by using the G71 O.D./I.D. rough cutting cycle and the G70 finishing cycle (Nose radius of finishing tool: 0.4 mm)

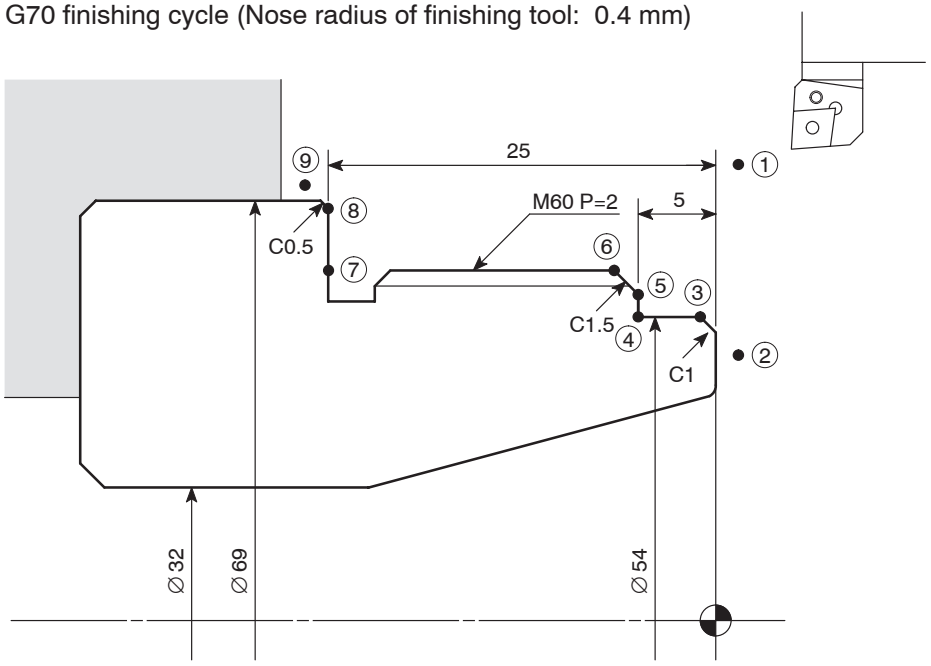


```
O0001;
N1 (ROUGH. OF OUT); . . . . . Part program for face and O.D. rough cutting
G50 S1500;
G00 T0101;
G96 S120 M03;
X75.0 Z20.0 M08;
G01 Z0.1 F1.0;
X25.0 F0.25;
G00 X70.0 Z1.0; . . . . . Positioning at ①, the start point of the O.D. rough
                          cutting cycle (G71)
G71 U2.0 R0.5;
G71 P100 Q200 U0.3 W0.1 F0.3; . . . Execution of the O.D. rough cutting cycle (G71)
```

- U2.0 . . . . Depth of cut: 2 mm (in radius)
- R0.5 . . . . Relief amount: 0.5 mm
- P100 . . . . The sequence number of the first block of the blocks defining the finish shape N100
- Q200 . . . The sequence number of the last block of the blocks defining the finish shape N200
- U0.3 . . . . Finishing allowance in the X-axis direction: 0.3 mm (in diameter)
- W0.1 . . . . Finishing allowance in the Z-axis direction: 0.1 mm
- F0.3 . . . . Feedrate: 0.3 mm/rev

```
N100 G00 X49.54;
G01 X54.0 Z–1.23 F0.15;
Z–5.0;
X56.34;
X59.8 Z–6.73;
Z–25.0;
X67.54;
N200 X70.0 Z–26.23;
```

. . . . . The blocks from N100 to N200 define the finish shape including ② to ⑨.

NOTE ① The command values in these blocks are determined taking into consideration the tool nose radius (0.4 mm) of the finishing tool.

② The feedrate command “F0.15” specified in these blocks is ignored for rough cutting cycle. Feedrate during rough cutting cycle is F0.3 (0.3 mm/rev).

```
G00 X200.0 Z150.0;
M01;

N2 (FIN. OF OUT); . . . . . Part program for face and O.D. finishing
G50 S2000;
G00 T0202;
G96 S200 M03;
X56.0 Z20.0 M08;
G01 Z0 F1.0;
X30.0 F0.15;
G00 X70.0 Z1.0; . . . . . Positioning at ①, the start point of the finishing cycle (G70)
G70 P100 Q200; . . . . . Execution of the finishing cycle (G70)
                         Finish cutting is executed for the shape defined by the blocks from N100 to N200.
```

NOTE Cutting conditions for finishing:
Cutting speed . . . S200 (200 m/min)
Feedrate . . . . . F0.15 (0.15 mm/rev)

```
G00 X200.0 Z150.0;
M01;
```

Tool paths for rough cutting cycle

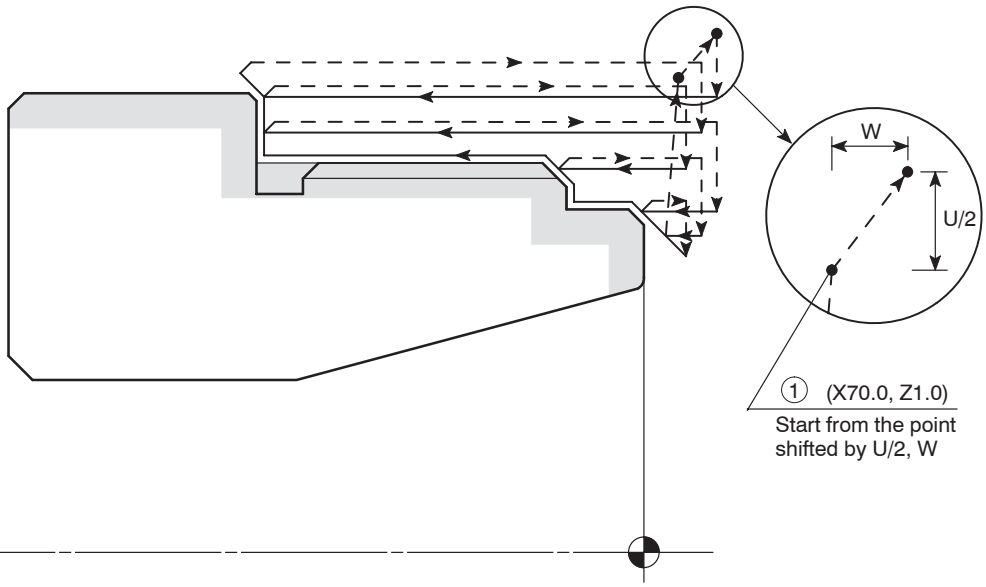

3. **G72** Rough Facing Cycle

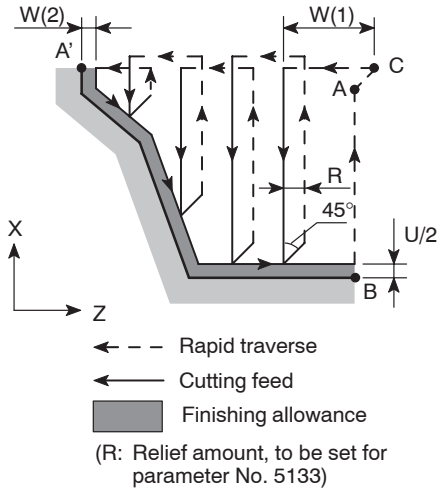

(R: Relief amount, to be set for parameter No. 5133)

The rough facing cycle is used for workpieces which have monotonously varying shapes both in the X- and Z-axis directions.

When the finish shape (A → A' → B) is defined in a program, rough cutting paths are automatically generated leaving allowance of U/2 and W(2) for finishing on the workpiece circumference and end face, respectively. The depth of cut for rough cutting cycle is W(1).

Generally, a finishing cycle called by the G70 command is used to finish the workpiece after completing the face rough cutting cycle.

COMMAND

1. Standard format (setting made before shipping the machine)

G72 W(1) R_ ;
G72 P_ Q_ U_ W(2) F_ S_ T_ ;

2. F15 format

G72 P_ Q_ U_ W(2) I_ K_ D_ F_ S_ T_ ;

- G72 . . . . . Calls the rough facing cycle.
- W(1) . . . . . Specifies depth of cut (Z-axis direction) (unsigned).

NOTE Since this command is modal, it remains valid until it is replaced with the value specified next. This value can also be set for parameter No. 5132; the value set for the parameter is changed according to the value specified in the program.

- R . . . . . Specifies the relief amount.

NOTE Since this command is modal, it remains valid until it is replaced with the value specified next. This value can also be set for parameter No. 5133; the value set for the parameter is changed according to the value specified in the program.

- P . . . . . Specifies the sequence number of the first block of the blocks that define the finish shape of the workpiece.
- Q . . . . . Specifies the sequence number of the last block of the blocks that define the finish shape of the workpiece.
- U . . . . . Specifies the distance and direction of the finishing allowance in the X-axis direction (in diameter).
- W(2) . . . . . Specifies the distance and direction of the finishing allowance in the Z-axis direction.

- I . . . . . Specifies the distance and direction of rough finishing allowance in the X-axis direction (in radius).

  NOTE The command is disregarded even if specified.

- K . . . . . Specifies the distance and direction of rough finishing allowance in the Z-axis direction.

  NOTE The command is disregarded even if specified.

- D . . . . . Specifies the depth of cut (Z-axis direction) (unsigned).

  NOTE Input of a decimal point is not allowed.

- F . . . . . Specifies feedrate to be adopted for the G72 cycle.
- S . . . . . Specifies spindle speed control to be adopted for the G72 cycle.

  NOTE In the G96 mode: The value specifies cutting speed (m/min).

  In the G97 mode: The value specifies spindle speed (min^{-1}).

- T . . . . . Specifies a tool number and the tool offset number in a four digit number.

NOTE ① If no F, S, or T command is specified, the command which has been specified preceding the G72 block is valid.

② In the first block of the blocks defining the finish shape, as specified by the P command in the “G72 P_ Q_ ...;” block, take the following items into consideration.

– Always specify either the G00 or G01 command. If neither G00 nor G01 command is specified, an alarm message (No. 065) is displayed on the screen.

G00 . . . Infeed in the G72 cycle is made at a rapid traverse rate.

G01 . . . Infeed in the G72 cycle is made at a cutting feedrate.

NOTE ③ The workpiece shape must be monotonously increasing or decreasing pattern in the X-axis directions as shown in the illustration below.

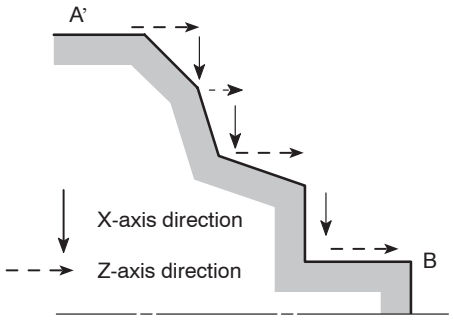

The patter shown on the left monotonously changes both in the X- and Z-axis directions.

In this case, the first block of the blocks used to define the finish shape must contain only either X(U) or Z(W) axis.

G72 W2.0 R0.5;
G72 P100 Q200 U0.3 W0.1 F0.3;
N100 G00 **Z(W)**_;
⋮

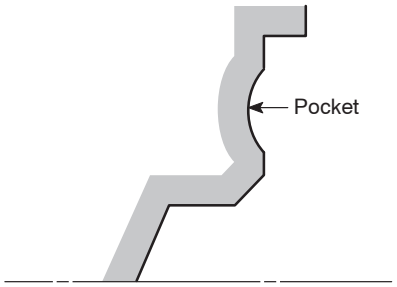

Even if the finish shape is not a monotonously increasing or decreasing pattern, machining is possible if the number of pockets included in the shape is 10 or less.

In this case, the first block of the blocks used to define the finish shape must contain both X(U) and Z(W) axes. Even if either of them does not move in the first block, it is necessary to specify U0 or W0. This function is optional for the SL-25E.

G72 W2.0 R0.5;
G72 P100 Q200 U0.3 W0.1 F0.3;
N100 G00 **X(U)_ Z(W)**_;
⋮

Ex. **Programming using G72**

To finish the shape illustrated below by using the G72 rough facing cycle and the G70 finishing cycle (Nose radius of finishing tool: 0.4 mm)

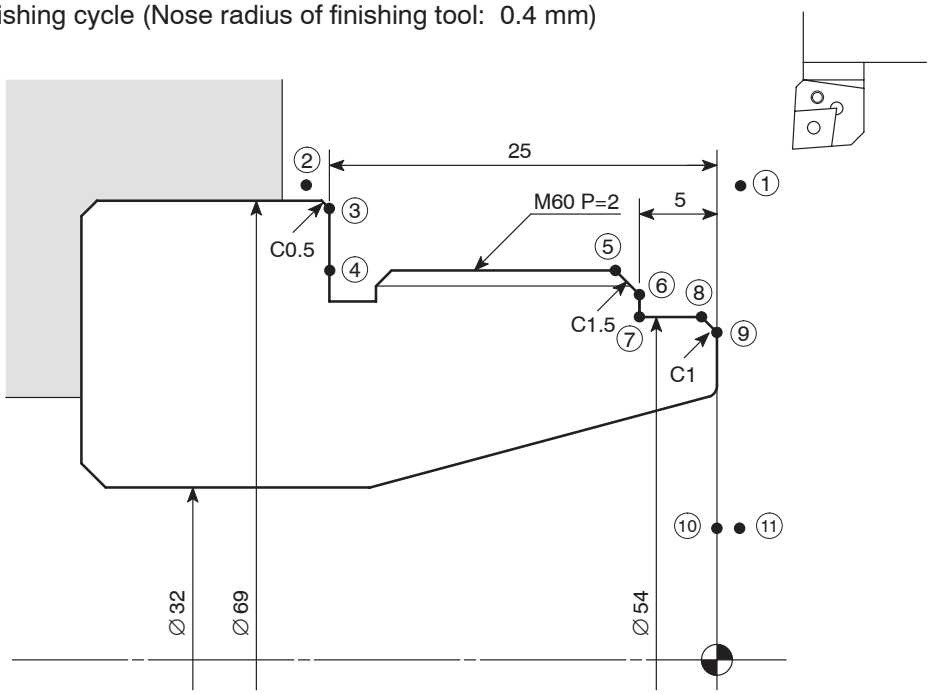

O0001;

N1 (ROUGH. OF OUT); . . . . . Part program for face and O.D. rough cutting

G50 S1500;

G00 T0101;

G96 S120 M03;

X75.0 Z20.0 M08;

G01 X72.0 Z1.0 F1.0; . . . . . Positioning at ①, the start point of the face rough cutting cycle (G72)

G72 W2.0 R0.5;
G72 P100 Q200 U0.3 W0.1 F0.3; . . . Execution of the face rough cutting cycle (G72)

- W2.0 . . . . Depth of cut: 2 mm (in radius)
- R0.5 . . . . Relief amount: 0.5 mm
- P100 . . . . The sequence number N100 of the first block of the blocks defining the finish shape
- Q200 . . . The sequence number N200 of the last block of the blocks defining the finish shape
- U0.3 . . . . Finishing allowance in the X-axis direction: 0.3 mm (in diameter)
- W0.1 . . . . Finishing allowance in the Z-axis direction: 0.1 mm
- F0.3 . . . . Feedrate: 0.3 mm/rev

```
N100 G00 Z–27.23;
G01 X67.54 Z–25.0 F0.15;
X59.8;
Z–6.73;
X56.34 Z–5.0;
X54.0;
Z–1.23;
X51.54 Z0;
X25.0;
N200 Z1.0;
G00 X200.0 Z150.0;
M01;
```

..... The blocks from N100 to N200 define the finish shape including ② to ⑪.

NOTE
① The command values in these blocks are determined taking into consideration the tool nose radius (0.4 mm) of the finishing tool.
② The feedrate command “F0.15” specified in these blocks is ignored for rough cutting cycle. Feedrate during rough cutting cycle is F0.3 (0.3 mm/rev).

```
N2 (FIN. OF OUT); ..... Part program for face and O.D. finishing
G50 S2000;
G00 T0202;
G96 S200 M03;
X75.0 Z20.0 M08;
G01 X72.0 Z1.0 F1.0; ..... Positioning at ①, the start point of the finishing cycle (G70)
G70 P100 Q200; ..... Execution of the finishing cycle (G70)
                     Finish cutting is executed for the shape defined by the blocks from N100 to N200.
```

NOTE
Cutting conditions for finishing:
Cutting speed . . . S200 (200 m/min)
Feedrate . . . . . F0.15 (0.15 mm/rev)

```
G00 X200.0 Z150.0;
M01;
```

Tool paths for rough cutting cycle

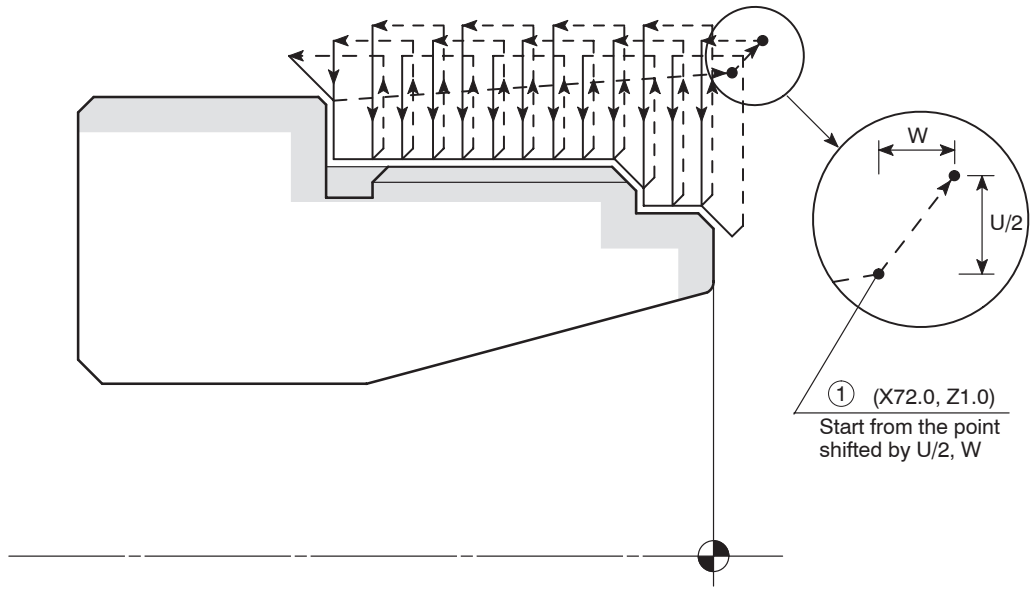

4. **G73** Closed-loop Cutting Cycle

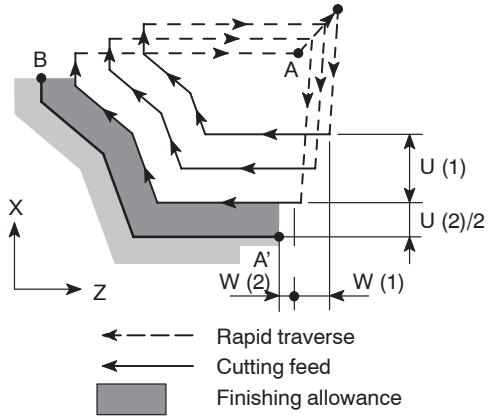

In the G73 closed-loop cutting cycle, the defined pattern is repeated while it is being shifted to finish the workpiece.

By specifying the finish shape, A → A' → B, in the illustration on the left, the workpiece is machined by executing the specified pattern repeatedly until the finishing allowance of U(2)/2 and W(2) is left on the finish shape.

This cycle is used to efficiently machine workpieces that have uniform stock to be removed, such as forged or cast workpieces.

Generally, a finishing cycle called by the G70 command which is explained later is used to finish the workpiece after completing the rough cutting using the G73 closed-loop cutting cycle.

COMMAND

1. Standard format (setting made before shipping the machine)

G73 U(1) W(1) R_ ;
G73 P_ Q_ U(2) W(2) F_ S_ T_ ;

2. F15 format

G73 P_ Q_ U(2) W(2) I_ K_ D_ F_ S_ T_ ;

- G73 . . . . . Calls the closed-loop cutting cycle.
- U(1) . . . . . Specifies the distance and direction of entire stock for rough cutting in the X-axis direction (in radius).

  NOTE Since this command is modal, it remains valid until it is replaced with the value specified next. This value can also be set for parameter No. 5135; the value set for the parameter is changed according to the value specified in the program.

- W(1) . . . . . Specifies the distance and direction of entire stock for rough cutting in the Z-axis direction.

  NOTE Since this command is modal, it remains valid until it is replaced with the value specified next. This value can also be set for parameter No. 5136; the value set for the parameter is changed according to the value specified in the program.

- R, D . . . . . Specifies the number of divisions in which rough machining is executed.

  NOTE Since this command is modal, it remains valid until it is replaced with the value specified next. This value can also be set for parameter No. 5137; the value set for the parameter is changed according to the value specified in the program.

- P . . . . . Specifies the sequence number of the first block of the blocks that define the finish shape of the workpiece.
- Q . . . . . Specifies the sequence number of the last block of the blocks that define the finish shape of the workpiece.
- U(2) . . . . . Specifies the distance and direction of the finishing allowance in the X-axis direction (in diameter).
- W(2) . . . . . Specifies the distance and direction of the finishing allowance in the Z-axis direction.
- I . . . . . Specifies the distance and direction of entire stock for rough cutting in the X-axis direction (in radius).
- K . . . . . Specifies the distance and direction of entire stock for rough cutting in the Z-axis direction.
- F . . . . . Specifies feedrate to be adopted for the G73 cycle.
- S . . . . . Specifies spindle speed control to be adopted for the G73 cycle.

  NOTE In the G96 mode: The value specifies cutting speed (m/min).

  In the G97 mode: The value specifies spindle speed (min^{-1}).

- T . . . . . Specifies a tool number and the tool offset number in a four digit number.

NOTE ① If no F, S, or T command is specified, the command which has been specified preceding the G73 block is valid.

② In the first block of the blocks defining the finish shape, as specified by the P command in the “G73 P_ Q_ ...;” block, take the following items into consideration.

– Always specify either the G00 or G01 command. If neither G00 nor G01 command is specified, an alarm message (No. 065) is displayed on the screen.

G00 . . . Infeed in the G73 cycle is made at a rapid traverse rate.

G01 . . . Infeed in the G73 cycle is made at a programmed feedrate.

Ex. **Programming using G73**

To finish the shape illustrated below by using the G73 closed-loop rough cutting cycle and the G70 finishing cycle (Nose radius of finishing tool: 0.4 mm)

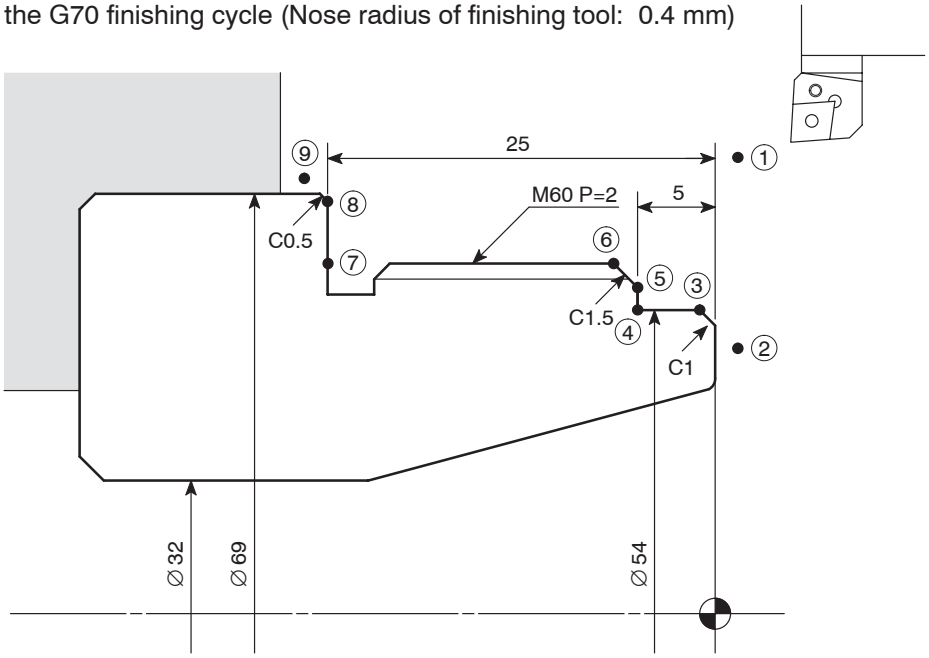

O0001;

N1 (ROUGH OF OUT); . . . . . Part program for face and O.D. rough cutting
G50 S1500;
G00 T0101;
G96 S120 M03;
X75.0 Z20.0 M08;
G01 Z0.1 F1.0;
X25.0 F0.25;
G00 X75.0 Z10.0; . . . . . Positioning at ①, the start point of the closed-loop rough cutting cycle (G73)

G73 U5.0 W5.0 R3;
G73 P100 Q200 U0.3 W0.1 F0.3; . . . Execution of the closed-loop rough cutting cycle (G73)

- U5.0 . . . . Total stock for rough cutting in the X-axis direction: 5.0 mm (in radius)
- W5.0 . . . . Total stock for rough cutting in the Z-axis direction: 5.0 mm
- R3 . . . . . The number of times the rough cutting cycle is repeated: 3 times
- P100 . . . . The sequence number N100 of the first block of the blocks defining the finish shape
- Q200 . . . The sequence number N200 of the last block of the blocks defining the finish shape
- U0.3 . . . . Finishing allowance in the X-axis direction: 0.3 mm (in diameter)

- W0.1 . . . . Finishing allowance in the Z-axis direction: 0.1 mm
- F0.3 . . . . Feedrate: 0.3 mm/rev

```
N100 G00 X49.54 Z1.0;
G01 X54.0 Z–1.23 F0.15;
Z–5.0;
X56.34;
X59.8 Z–6.73;
Z–25.0
X67.54;
N200 X70.0 Z–26.23;
```

. . . . . The blocks from N100 to N200 define the finish shape including ② to ⑨.

NOTE
① The command values in these blocks are determined taking into consideration the tool nose radius (0.4 mm) of the finishing tool.

② The feedrate command “F0.15” specified in these blocks is ignored for rough cutting cycle. Feedrate during rough cutting cycle is F0.3 (0.3 mm/rev).

```
G00 X200.0 Z150.0;
M01;

N2 (FIN. OF OUT); . . . . . Part program for face and O.D. finishing
G50 S2000;
G00 T0202;
G96 S200 M03;
X56.0 Z20.0 M08;
G01 Z0 F1.0;
X30.0 F0.15;
G00 X75.0 Z10.0; . . . . . Positioning at ①, the start point of the finishing cycle (G70)
G70 P100 Q200; . . . . . Execution of the finishing cycle (G70)
                         Finish cutting is executed for the shape defined by the blocks from N100 to N200.
```

NOTE
Cutting conditions for finishing:
Cutting speed . . . S200 (200 m/min)
Feedrate . . . . . F0.15 (0.15 mm/rev)

```
G00 X200.0 Z150.0;
M01;
```

Tool paths for rough cutting cycle

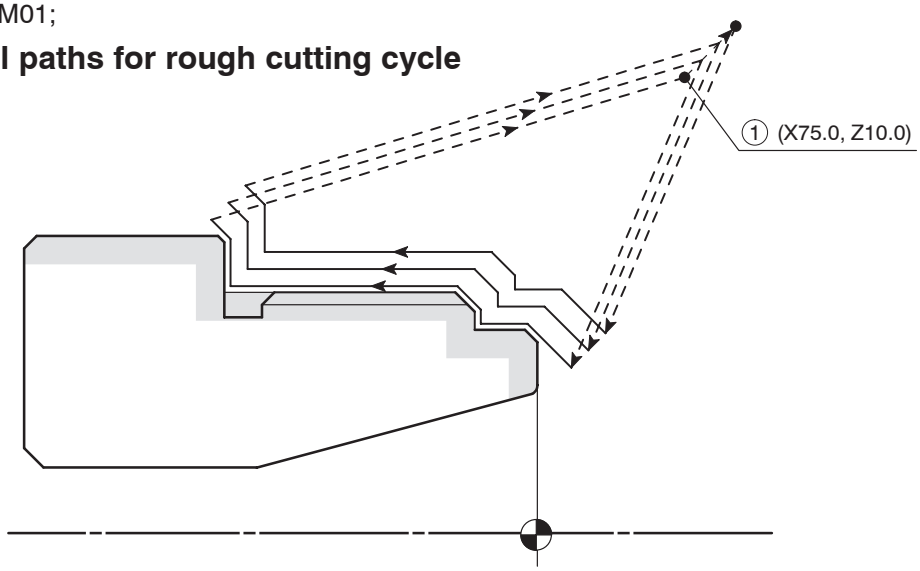

5. Cautions on Using the G71, G72, and G73 Cycles

The cautionary items to be observed when using the G71, G72, and G73 commands are described below.

WARNING

If the multiple repetitive cycle is interrupted to execute manual operation, the status before the interruption of the cycle must be re-established before restarting the interrupted cycle. If the cycle is restarted without re-establishing the previous status, the turret will move in an unexpected direction, causing interference between the cutting tools, tool holders, or turret head, and the workpiece, chuck, fixture, or tailstock (tailstock specification), which could cause accidents involving serious injuries or damage to the machine. In addition, if cutting is carried out with the wrong tool, the cutting tool will be damaged.

NOTE

① The blocks which define the finish shape must directly follow the G71, G72, or G73 block. If there is a block between the G71, G72, or G73 block and those defining the finish shape, the inserted block is not executed.

② During the execution of a rough cutting cycle called up by the G71, G72, or G73 command, F, S, T, G96, and G97 commands are ignored if they are specified in blocks between the blocks which are assigned the sequence numbers specified by the P and Q command. The F, S, T, G96, and G97 commands must be specified in the G71, G72, or G73 block, or a preceding block.

```
    ⋮                 (G96 mode)
N5 G71 U2.0 R0.5;
N6 G71 P7 Q17 U0.3 W0.1 F0.25 S100;
N7 G00 X_ S180;
N8 G01 X_ Z_ F0.2;
    ⋮
N17_ ;
    ⋮
N_ G70 P7 Q17;
    ⋮
```

. . . . Execution of the G71 rough cutting cycle
Feedrate: 0.25 mm/rev
Cutting speed: 100 m/min

. . . . . “S180” and “F0.2” are ignored for the execution of the G71 rough cutting cycle.

. . . . . Execution of the G70 finishing cycle
Feedrate: 0.2 mm/rev
Cutting speed: 180 m/min

During the execution of the G70 finishing cycle, feedrate and spindle (cutting) speed specified in a block between N7 and N17 are valid.

NOTE

③ The following G and M codes must not specified in the blocks specified by the P and Q commands.

- G codes in group 00 (one-shot G codes) with an exception of G04 (dwell)
- G codes in group 01 with an exception of G00, G01, G02, and G03
- G codes in group 06
- M98 and M99

④ It is not allowed to specify the G71, G72, and G73 commands in the MDI mode. An alarm message (No. 067) is displayed on the screen if the G71, G72, or G73 command is specified in the MDI mode.

⑤ It is not allowed to specify the M98 and M99 commands in the block that contains the G71, G72, or G73 command, and the blocks that are assigned the sequence numbers specified by the P and Q commands.

⑥ The last axis movement specified in the blocks that are assigned the sequence numbers specified by the P and Q commands must not be chamfering or corner rounding.

If such commands are specified, an alarm message (No. 069) is displayed on the screen.

⑦ For the G71, G72, or G73 cycle, the automatic tool nose radius offset function is invalid.

NOTE ⑧ The relationship between the finish shape program and the sign (+/–) for address U and W is indicated below.

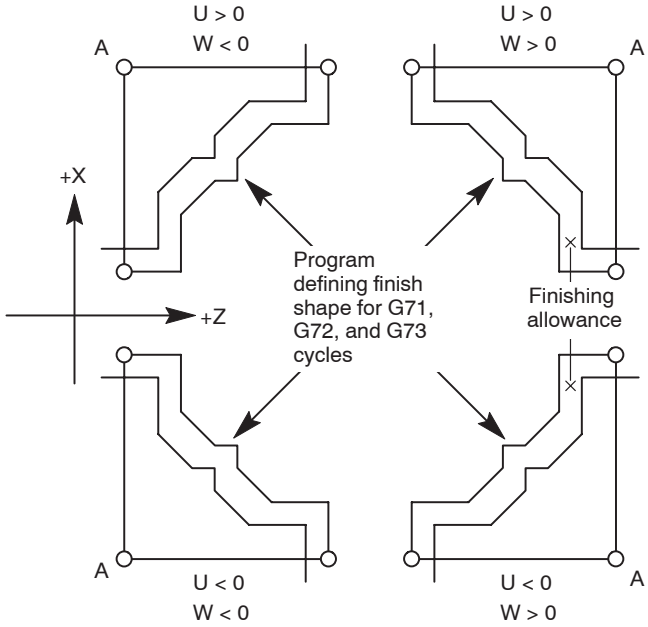

<Tool paths generated due to wrong sign>

Correct: U, W > 0
Wrong: U, W < 0

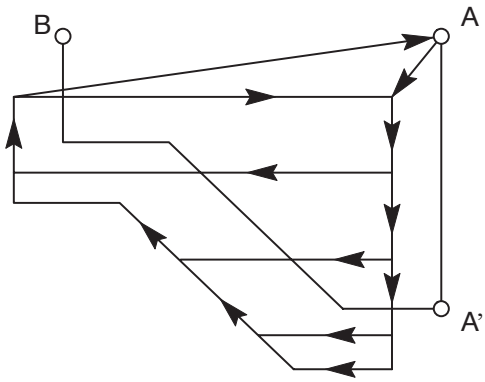

If a wrong sign is used for addresses U and W commands, overcut will occur as in the illustration on the left.

6. **G70** Finishing Cycle

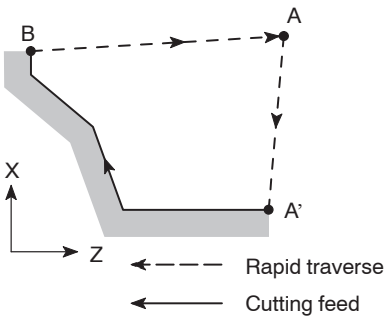

After the completion of rough cutting cycle, called by the G71, G72 or G73 command, the workpiece is finished by calling the G70 finishing cycle.

After the cutting tool is returned to point A, specified in a program, finishing cycle is executed along the finish shape A' → B defined in the blocks which follow the G71, G72, or G73 block.

NOTE For the finishing cycle called by the G70 command, the finish shape program specified in the G71, G72, or G73 block is used.

COMMAND

G70 P_ Q_ ;

- G70 . . . . . Calls the finishing cycle.
- P . . . . . Specifies the sequence number of the first block of the blocks that define the finish shape of the workpiece.
- Q . . . . . Specifies the sequence number of the last block of the blocks that define the finish shape of the workpiece.

WARNING

If the multiple repetitive cycle is interrupted to execute manual operation, the status before the interruption of the cycle must be re-established before restarting the interrupted cycle. If the cycle is restarted without re-establishing the previous status, the turret will move in an unexpected direction, causing interference between the cutting tools, tool holders, or turret head, and the workpiece, chuck, fixture, or tailstock (tailstock specification), which could cause accidents involving serious injuries or damage to the machine. In addition, if cutting is carried out with the wrong tool, the cutting tool will be damaged.

① During the execution of the finishing cycle called up by G70, the F, S, and T commands specified in the G71, G72, or G73 block are ignored, but the F, S, and T commands specified in the blocks between those assigned the sequence numbers specified by the P and Q commands are used.

```
      ⋮                (G96 mode)
N5 G71 U2.0 R0.5;
N6 G71 P7 Q17 U0.3 W0.1 F0.25 S100;  ..... Execution of the G71 rough
                                           cutting cycle
                                           Feedrate:       0.25 mm/rev
                                           Cutting speed:  100 m/min
N7 G00 X_ S180;
N8 G01 X_ Z_ F0.2;                   ..... "S180" and "F0.2" are
      ⋮                                    ignored for the execution of
                                           the G71 rough cutting cycle.
N17 _ ;
      ⋮
N_ G70 P7 Q17; ..................... Execution of the G70 finishing
      ⋮                                    cycle
                                           Feedrate:       0.2 mm/rev
                                           Cutting speed:  180 m/min
                                           During the execution of the
                                           G70 finishing cycle, feedrate
                                           and spindle (cutting) speed
                                           specified in a block between
                                           N7 and N17 are valid.
```

② The following G and M codes must not specified in the blocks specified by the P and Q commands.

- G codes in group 00 (one-shot G codes) with an exception of G04 (dwell)
- G codes in group 01 with an exception of G00, G01, G02, and G03
- G codes in group 06
- M98 and M99

③ The last axis movement specified in the blocks that are assigned the sequence numbers specified by the P and Q commands must not be chamfering or corner rounding.

If such commands are specified, an alarm message (No. 069) is displayed on the screen.

7. **G74** Face Cut-off, Grooving Cycle and Deep Hole Drilling Cycle

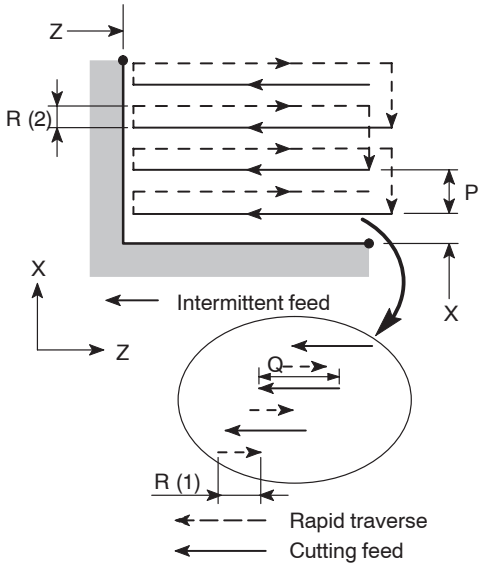

(R (1): Return amount, set for parameter No. 5139)
Details of intermittent infeed

In the cycle called up by the G74 command, intermittent feed with a fixed infeed distance is repeated along the Z-axis.

After the infeed by “Q”, the tool returns by “R(1)” then the next infeed is repeated.

By repeating this infeed and retraction pattern, it is possible to carry out cutting without applying excessive force to the tool.

If the interval along the X-axis is omitted in the program, the cycle can be used for the deep hole drilling cycle.

COMMAND

1. Standard format (setting made before shipping the machine)

   <Face cut-off cycle, face grooving cycle>

   G74 R(1);
   G74 X(U)_ Z(W)_ P_ Q_ R(2) F_ ;

   <Deep hole drilling cycle>

   G74 R(1);
   G74 Z(W)_ Q_ F_ ;

2. F15 format

   <Face cut-off cycle, face grooving cycle>

   G74 X(U)_ Z(W)_ I_ K_ F_ D_ ;

   <Deep hole drilling cycle>

   G74 Z(W)_ K_ F_ ;

- G74 . . . . . Calls the face cut-off cycle, face grooving cycle, or deep hole drilling cycle, .
- R(1) . . . . . Specifies the relief amount.

  NOTE Since this command is modal, it remains valid until it is replaced with the value specified next. This value can also be set for parameter No. 5139; the value set for the parameter is changed according to the value specified in the program.

- X . . . . . Specifies the cutting end point in the X-axis direction.

- Z . . . . . Specifies the bottom of cutting in the Z-axis direction.
- U . . . . . Specifies the distance and direction from the cutting start point to the cutting end point in the X-axis direction (in diameter).
- W . . . . . Specifies the distance and direction from the cutting start point to the cutting end point in the Z-axis direction.
- P, I . . . . . Specifies the distance in X-axis movement (unsigned, in radius).
- Q, K . . . . . Specifies the depth of cut in the Z-axis direction (unsigned value).
- R(2), D . . . . . Escape at the bottom (unsigned value)
- F . . . . . Specifies feedrate.

WARNING

If the multiple repetitive cycle is interrupted to execute manual operation, the status before the interruption of the cycle must be re-established before restarting the interrupted cycle. If the cycle is restarted without re-establishing the previous status, the turret will move in an unexpected direction, causing interference between the cutting tools, tool holders, or turret head, and the workpiece, chuck, fixture, or tailstock (tailstock specification), which could cause accidents involving serious injuries or damage to the machine. In addition, if cutting is carried out with the wrong tool, the cutting tool will be damaged.

NOTE

① If no F command is specified in the G74 block, the one valid before the execution of the G74 block becomes valid for the execution of the cutting defined by the commands in the G74 block.

② The cycle starts from and ends at the position, where the cutting tool is positioned right before the execution of the G74 block.

③ For the G74 cycle, the automatic tool nose radius offset function is invalid.

Ex. **Programming using G74 (Face cut-off cycle)**

To create a program using the G74 face cut-off cycle

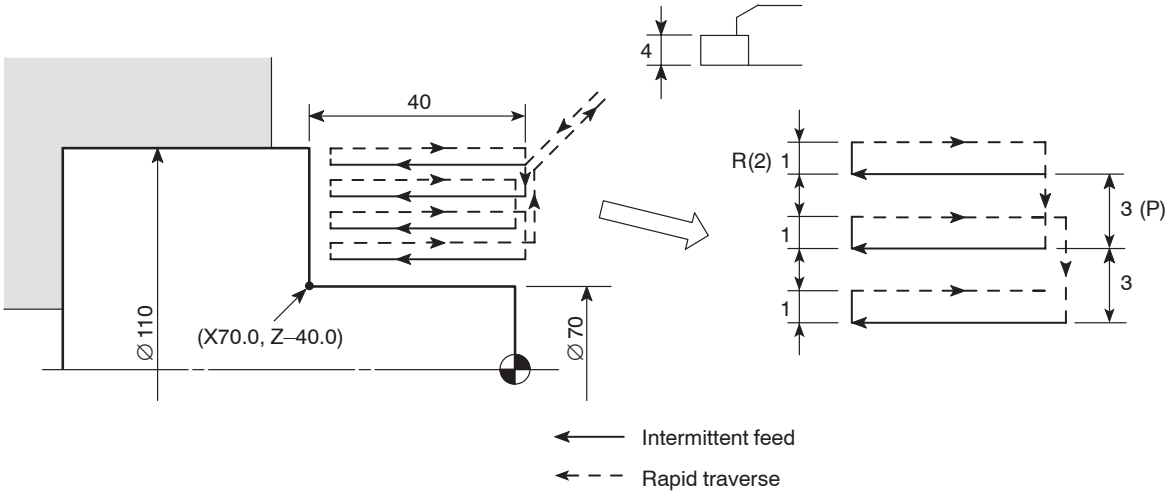

O0001;

N1;

G50 S1500;

G00 T0101;

G96 S100 M03;

X100.0 Z20.0 M08;

G01 Z3.0 F1.0; . . . . . Positioning at the start point (X100.0, Z3.0) for the face cut-off cycle (G74)

G74 X70.0 Z–40.0 P3000 Q10000 R1.0 F0.25;

. . . . . Execution of the face cut-off cycle (G74)

- X70.0 . . . . Cutting end point in the X-axis direction
- Z–40.0 . . . Bottom of cutting in the Z-axis direction
- P3000 . . . Interval in the X-axis direction movement (in radius): 3 mm
- Q10000 . . Infeed amount per intermittent infeed operation in the Z-axis direction: 10 mm
- R1.0 . . . . . Escape at the bottom of cutting: 1 mm
- F0.25 . . . . Feedrate: 0.25 mm/rev

At the completion of the cycle, the cutting tool returns to the start point of the cycle (X100.0, Z3.0), at a rapid traverse rate.

G00 X200.0 Z150.0;

M01;

Ex. **Programming using G74 (Deep hole drilling)**

To create a program using the G74 deep hole drilling cycle

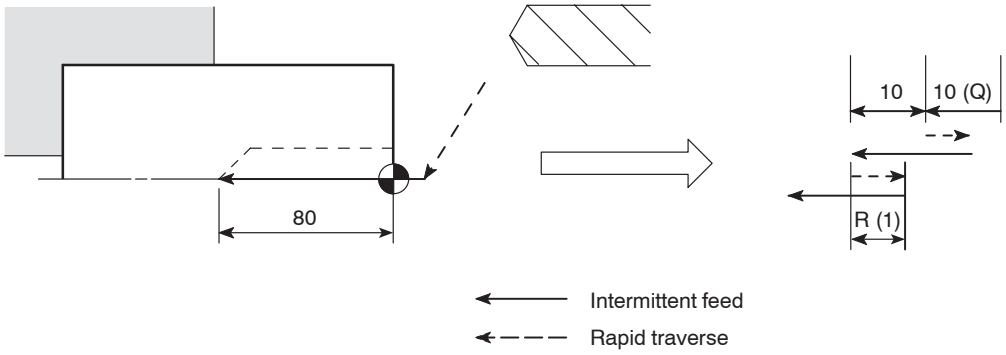

O0001;
N1;
G00 T0101;
G97 S300 M03;
X0 Z20.0 M08;
G01 Z5.0 F1.0; . . . . . Positioning at the start point (X0, Z5.0) for the deep hole drilling cycle (G74)
G74 Z–80.0 Q10000 F0.15; . . . . . Execution of the deep hole drilling cycle (G74)

- Z–80.0 . . . Bottom of cutting in the Z-axis direction
- Q10000 . . Infeed amount per intermittent infeed operation in the Z-axis direction: 10 mm
- F0.15 . . . . Feedrate: 0.15 mm/rev

After the completion of the cycle, the cutting tool returns to the start point of the cycle (X0, Z5.0), at a rapid traverse rate.

G00 X200.0 Z150.0;
M01;

8. **G75** O.D./I.D. Grooving Cycle, Cut-off Cycle

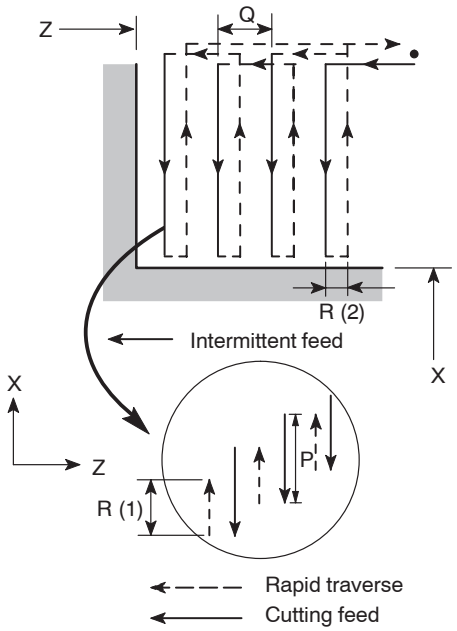

(R (1): Relief amount, set for parameter No. 5139)
Details of intermittent infeed

In the cycle called up by the G75 command, intermittent feed with a fixed infeed distance is repeated along the X-axis.

After the infeed by “P”, the tool returns by “R(1)” then the next infeed is repeated.

By repeating this infeed and retraction pattern, it is possible to carry out cutting without applying excessive force to the tool.

If the interval along the Z-axis is omitted in the program, the cycle can be used for the cut-off cycle.

COMMAND

1. Standard format (setting made before shipping the machine)

<O.D./I.D. grooving cycle>

G75 R(1);
G75 X(U)_ Z(W)_ P_ Q_ R(2) F_ ;

<O.D. cut-off cycle>

G75 R(1);
G75 X(U)_ P_ F_ ;

2. F15 format

<O.D./I.D. grooving cycle>

G75 X(U)_ Z(W)_ I_ K_ F_ D_ ;

<O.D. cut-off cycle>

G75 X(U)_ I_ F_ ;

- G75 . . . . . Calls the O.D./I.D. grooving cycle or O.D. cut-off cycle.
- R(1) . . . . . Specifies the relief amount.

NOTE

Since this command is modal, it remains valid until it is replaced with the value specified next. This value can also be set for parameter No. 5139; the value set for the parameter is changed according to the value specified in the program.

- X . . . . . Specifies the bottom of cutting in the X-axis direction.
- Z . . . . . Specifies the cutting end point in the Z-axis direction.
- U . . . . . Specifies the distance and direction from the cutting start point to the cutting end point in the X-axis direction (in diameter).
- W . . . . . Specifies the distance and direction from the cutting start point to the cutting end point in the Z-axis direction.
- P, I . . . . . Specifies the depth of cut in the X-axis direction (unsigned value, in radius).
- Q, K . . . . . Specifies the distance in Z-axis movement (unsigned).
- R(2), D . . . . . Escape at the bottom
- F . . . . . Specifies feedrate.

WARNING

If the multiple repetitive cycle is interrupted to execute manual operation, the status before the interruption of the cycle must be re-established before restarting the interrupted cycle. If the cycle is restarted without re-establishing the previous status, the turret will move in an unexpected direction, causing interference between the cutting tools, tool holders, or turret head, and the workpiece, chuck, fixture, or tailstock (tailstock specification), which could cause accidents involving serious injuries or damage to the machine. In addition, if cutting is carried out with the wrong tool, the cutting tool will be damaged.

NOTE

① If no F command is specified in the G75 block, the one valid before the execution of the G75 block becomes valid for the execution of the cutting defined by the commands in the G75 block.

② The cycle starts from and ends at the position, where the cutting tool is positioned right before the execution of the G75 block.

③ For the G75 cycle, the automatic tool nose radius offset function is invalid.

④ Do not specify a relief amount R(2) command for O.D. or I.D. grooving operation. If the R(2) command is specified for such operations, the tool shifts by the amount specified by the R(2) command at the bottom to cause the interference between the tool and the workpiece, which will result in damage to the tool.

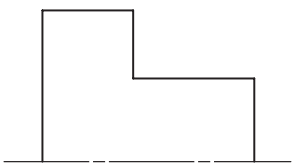

Specify the R(2) command for a workpiece having the shape as illustrated on the right.

Ex. **Programming using G75 (O.D./I.D. grooving cycle)**

To create a program using the G75 O.D. grooving cycle

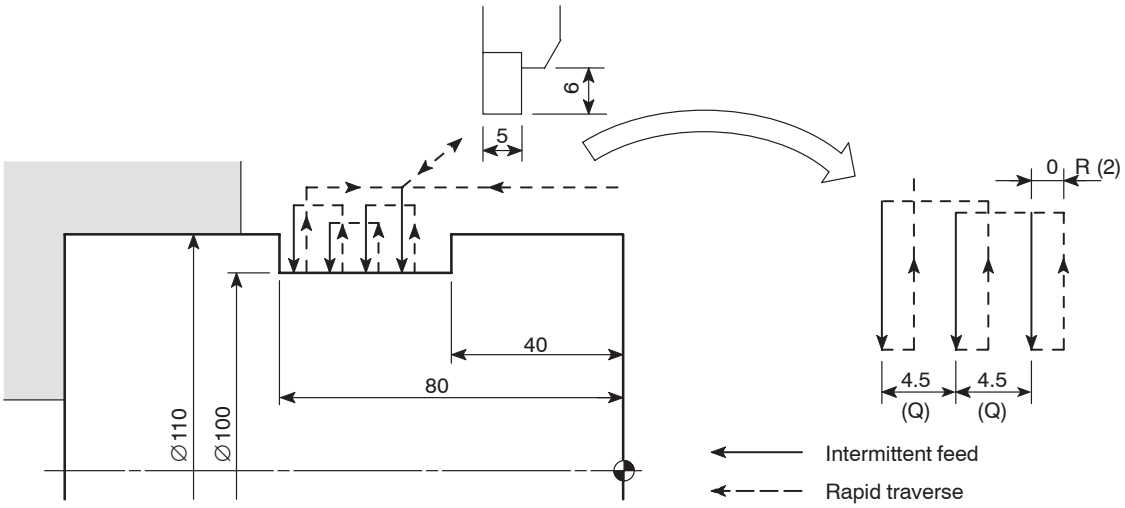

O0001;

N1;

G50 S1500;

G00 T0101;

G96 S100 M03;

X120.0 Z20.0 M08;

G01 Z–45.0 F1.0; . . . . . Positioning at the start point (X120.0, Z–45.0) for the O.D. grooving cycle (G75)

G75 X100.0 Z–80.0 P2000 Q4500 F0.15;

. . . . . Execution of the O.D. grooving cycle (G75)

- X100.0 . . Bottom of cutting in the X-axis direction
- Z–80.0 . . Cutting end point in the Z-axis direction
- P2000 . . Infeed amount per intermittent infeed operation in the X-axis direction: 2 mm
- Q4500 . . Interval in the Z-axis direction movement: 4.5 mm
- F0.15 . . . Feedrate: 0.15 mm/rev

At the completion of the cycle, the cutting tool returns to the start point of the cycle (X120.0, Z–45.0), at a rapid traverse rate.

G00 X200.0 Z150.0;

M01;

Ex. **Programming using G75 (Cut-off cycle)**

To create a program using the G75 O.D. cut-off cycle (hollow workpiece)

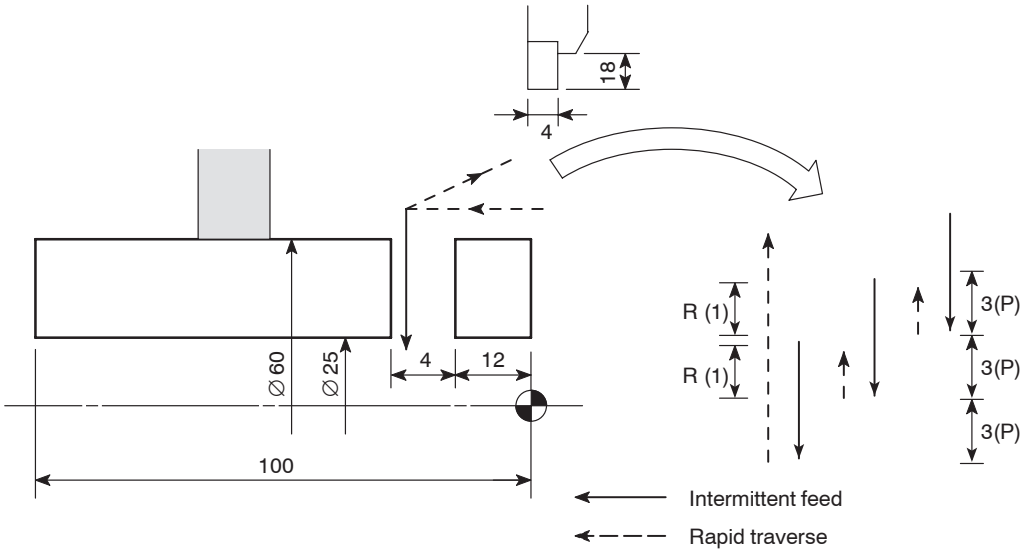

O0001;

N1;

G50 S1500;

G00 T0101;

G96 S100 M03;

X65.0 Z20.0 M08;

G01 Z–16.0 F1.0; . . . . . Positioning at the start point (X65.0, Z–16.0) for the cut-off cycle (G75)

G75 X20.0 P3000 F0.15; . . . . . Execution of the cut-off cycle (G75)

- X20. . . . . Bottom of cutting in the X-axis direction
- P3000 . . Infeed amount per intermittent infeed operation in the X-axis direction: 3 mm
- F0.15 . . . Feedrate: 0.15 mm/rev

At the completion of the cycle, the cutting tool returns to the start point of the cycle (X65.0, Z–16.0), at a rapid traverse rate.

G00 X200.0 Z150.0;

M01;

9. **G76** Automatic Thread Cutting Cycle

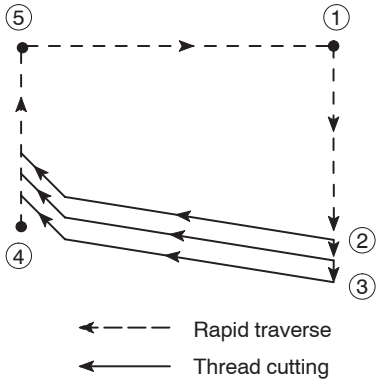

The G76 command calls the thread cutting cycle, shown in the illustration on the left.

The required thread height is obtained by executing the thread cutting pattern repeatedly in the range from ② to ③ along the angle of the thread.

COMMAND

1. Standard format (setting made before shipping the machine)

G76 P(1) Q(1) R(1) ;
G76 X(U)_ Z(W)_ R(2) P(2) Q(2) F_ ;

2. F15 format

G76 X(U)_ Z(W)_ I_ K_ D_ F_ A_ P_ ;

- G76 . . . . . Calls the thread cutting cycle.
- P(1) . . . . . Specifies how the thread should be machined with a 6-digit number.

  P□□△△○○

  □□: The number of finish cuts to be repeated.
  Range: 1 - 99

  NOTE This command is modal and remains valid until it is changed by another value specified next. The value can also be specified with parameter No.5142; the setting for this parameter can be changed by a programmed command.

  △△: Thread chamfering size

  NOTE Thread chamfering size can be specified in the range from 0.0L to 9.9L in increments of 0.1L (L: thread lead). In a program, specification is made in a 2-digit number of 00 to 99.

  The command is modal and remains valid until it is changed by another value specified next. The value can also be specified with parameter No. 5130; the setting for this parameter can be changed by a programmed command.

○○: Thread angle

NOTE Thread angle can be selected from the following six options:

80°, 60°, 55°, 30°, 29°, and 0°

In a program, the selected angle is directly specified in a 2-digit number.

The command is modal and remains valid until it is changed by another value specified next. The value can also be specified with parameter No. 5143; the setting for this parameter can be changed by a programmed command.

Ex. **P021260**

This P command specifies the following:

Finish cut is repeated two times,
Thread chamfering size is 1.2L, and
Thread angle is 60°.

- Q(1) . . . . . Specifies the minimum depth of cut.

NOTE If depth of cut per path ($\triangle d\sqrt{n} - \triangle d\sqrt{n-1}$) becomes smaller than $\triangle$dmin, depth of cut is clamped at $\triangle$dmin.

The command is modal and remains valid until it is changed by another value specified next. The value can also be specified with parameter No. 5140; the setting for this parameter can be changed by a programmed command.

- R(1) . . . . . Specifies the finishing allowance.

NOTE Since this command is modal, it remains valid until it is replaced with the value specified next. This value can also be set for parameter No. 5141; the value set for the parameter is changed according to the value specified in the program.

- X, Z . . . . . Specify the X and Z coordinates of the thread cutting end point.
- U, W . . . . . Specify the distance and direction from the thread cutting start point to the end point along the X-axis and the Z-axis, respectively (in diameter for U).
- R(2), I . . . . . Specifies the distance of taper in the X-axis direction (signed value, in radius).

If this command is omitted, straight thread is cut.

- P(2), K . . . . . Specifies thread height (in radius, unsigned value).
- Q(2), D . . . . . Specifies the depth of cut for the first thread cutting path (in radius, unsigned value).
- F . . . . . Specifies the lead of thread
- A . . . . . Specifies the angle of thread

NOTE The angle can be selected in the range 0° to 120° in increments of 1°. If this command is omitted, 0° is assumed. The angle can also be set for parameter No. 5143. If a value outside the allowable range is specified, an alarm message (No. 062) is displayed on the screen.

- P . . . . . Specifies the infeed mode

P1 . . . Straight feed along the thread face at fixed metal removal rate

P2 . . . Zigzag infeed at fixed metal removal rate

NOTE ① The data set for addresses P(2), Q(2), and R(2) are distinguished by the position of addresses X(U) and Z (W).

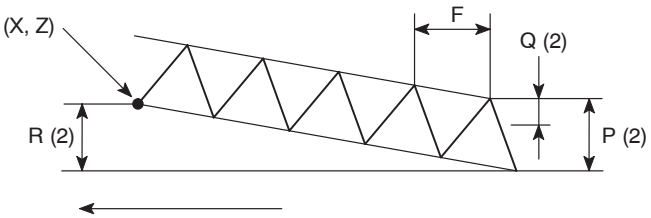

Thread cutting direction

② To carry out thread cutting in the pattern of “zigzag infeed at fixed metal removal rate”, use the F15 format for programming.

③ When the NC unit is an MSC-500, thread cutting in the pattern of “zigzag infeed at fixed metal removal rate” cannot be carried out.

9.1 Infeed Mode

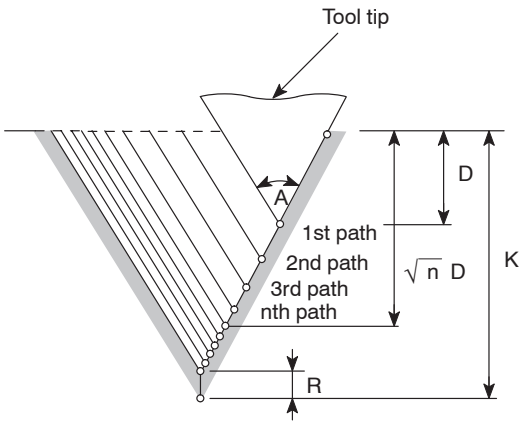

The G76 command calls the infeed mode for “fixed metal removal rate and straight feed along the thread face” operation.

The depth of cut in the nth thread cutting path is:

$Dn = \sqrt{n}\, D$

If the depth of cut per pass reaches or becomes smaller than the amount of δ set for parameter No. 5140 or the amount specified as Q(1), the depth of cut is fixed to the amount of δ set for parameter No. 5140 of the amount specified as Q(1).

9.2 Cautions on the G76 Automatic Thread Cutting Cycle

The cautions indicated for the G32 and G92 thread cutting cycles also apply to the thread cutting cycle called by the G76 command.

For details of cautions on the thread cutting cycle, refer to page B–36.

WARNING

If the multiple repetitive cycle is interrupted to execute manual operation, the status before the interruption of the cycle must be re-established before restarting the interrupted cycle. If the cycle is restarted without re-establishing the previous status, the turret will move in an unexpected direction, causing interference between the cutting tools, tool holders, or turret head, and the workpiece, chuck, fixture, or tailstock (tailstock specification), which could cause accidents involving serious injuries or damage to the machine. In addition, if cutting is carried out with the wrong tool, the cutting tool will be damaged.

NOTE

Chamfering mode for thread cutting is valid when the power is turned on.

M23 . . . . . Chamfering ON (initial status when the power is turned on.)
M24 . . . . . Chamfering OFF

Ex. **Programming using G76**

To execute thread cutting using the G76 automatic thread cutting cycle

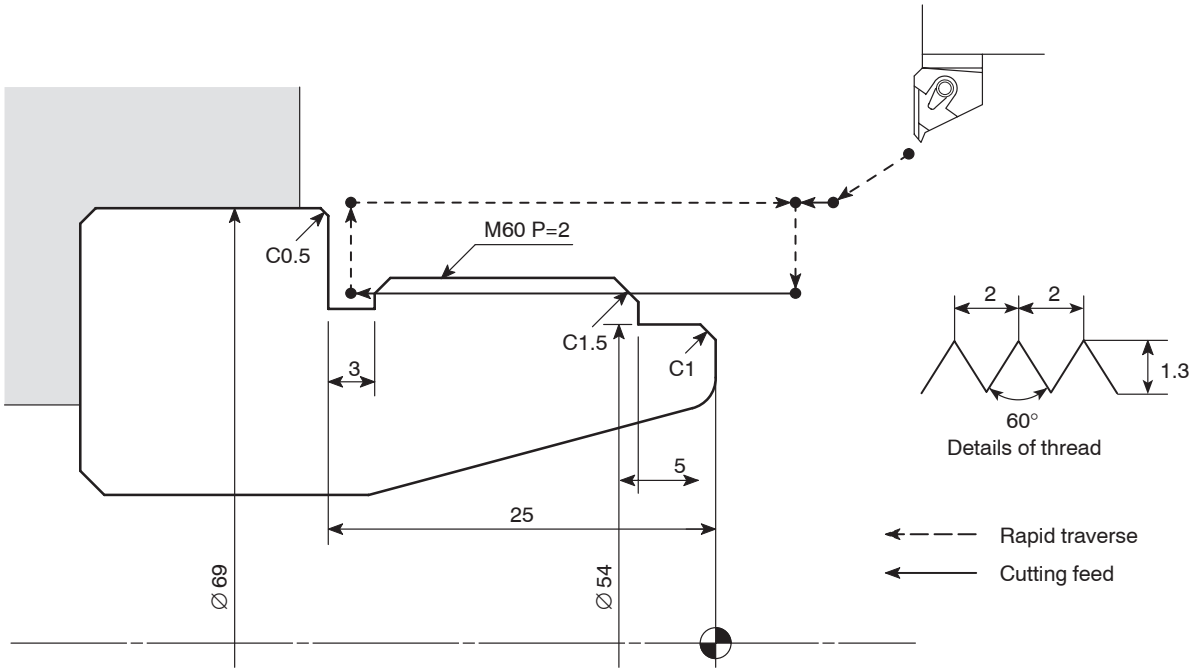


```
O0001;
N1;
G00 T0101;
G97 S640 M03;
X70.0 Z20.0 M08;
G01 Z5.0 F1.0 M24; ..... Positioning at the start point (X70.0, Z5.0) for
                         the automatic thread cutting cycle (G76)
```

NOTE M24: Makes chamfering invalid in the next thread cutting.

```
G76 P010060;
G76 X57.4 Z–24.0 P1300 Q350 F2.0; .... Execution of the automatic thread cutting
                                       cycle (G76)
```

- P010060 . . Finish cycle execution: Once
  Thread chamfering amount: 0
  Thread angle: 60°
- X57.4 . . . . . The diameter of the last thread cutting path
- Z–24.0 . . . . The Z coordinate of the thread cutting end point (includes incomplete thread length of 2 mm).
- P1300 . . . . Thread height: 1.3 mm
- Q350 . . . . . Depth of cut for the first thread cutting path: 0.35 mm
- F2.0 . . . . . Thread pitch: 2 mm

```
G00 X200.0 Z150.0 M09;
M05;
M30;
```

NOTE The thread height and the depth of cut for the first path are specified only for reference.

9.3 The Relationship between Depth of Cut for the First Path and the Number of Thread Cutting Paths to be Generated (Fixed Metal Removal Rate and Straight Feed along the Thread Face)

9.3.1 Calculating the Number of Thread Cutting Paths when the Depth of Cut for the First Path is Given

$$n = \left(\frac{K - a}{D} \right)^2 + 1$$

D : Depth of cut for the first path (in radius)
K : Thread height (in radius)
a : Depth of cut for the last path
n : Number of thread cutting paths

Ex.

Assume that:

D = 0.35
K = 1.3
a = 0.05,

then, number of thread cutting paths (n) are calculated as follows:

$$n = \left(\frac{1.3 - 0.05}{0.35} \right)^2 + 1$$
$$= 12.76 + 1$$
$$\fallingdotseq 14$$ (“12.76” is rounded up to “13”.)

Therefore, the thread cutting pattern is repeated 14 times to generate the required thread.

9.3.2 Calculating the Depth of Cut for the First Path when the Number of Thread Cutting Paths is Given

$$D = \frac{K - a}{\sqrt{n - 1}}$$

n : Number of thread cutting paths
K : Thread height (in radius)
a : Depth of cut for the last path
D : Depth of cut for the first path (in radius)

Ex.

Assume that:

K = 1.3
a = 0.05
n = 14,

then depth of cut for the first path (D) is calculated as follows:

$$D = \frac{1.3 - 0.05}{\sqrt{14 - 1}}$$
$$= 0.346 \cdots$$
$$\fallingdotseq 0.35$$

Therefore, the depth of cut for the first path is 0.35 mm.

CHAPTER I
HOLE MACHINING CANNED CYCLE

This chapter describes hole machining canned cycles.
Since different patterns of tool movement are available to cover various hole machining requirements, choose the most proper cycle for intended operation.

A hole machining cycle specifies operation sequence to be specified in several blocks by the commands in a single block containing a G code.

When specifying a hole machining canned cycle, two types of format (standard format and F15 format) are used.

This manual gives explanation based on the standard format. However, for the G codes which allow the use of the F15 format, related command format is also explained. Note that the F15 format is different from standard format.

For details, refer to the instruction manuals supplied by the NC unit manufacturer.

CONTENTS

I : HOLE MACHINING CANNED CYCLE

1. General I–1
   - 1.1 Number of Repetitions “K” I–6
   - 1.2 Operation Methods in Hole Machining Canned Cycles (G Codes) I–9
     - 1.2.1 Face Hole Machining Canned Cycle I–9
     - 1.2.2 Side Hole Machining Canned Cycle I–11

2. G80 Hole Machining Canned Cycle Cancel I–16

3. G83 Face Drilling Cycle I–18
   - 3.1 G83 Face High-speed Deep Hole Drilling Cycle I–18
   - 3.2 G83 Face Deep Hole Drilling Cycle I–22
   - 3.3 G83 Face Spot Drilling Cycle I–26
   - 3.4 G83 Face Spot Drilling Cycle (Dwell) I–28

4. G84 Face Tapping Cycle I–32

5. M329 G84 Synchronized Face Tapping Cycle I–36

6. G85 Face Boring Cycle I–41

7. G87 Side Drilling Cycle I–44
   - 7.1 G87 Side High-speed Deep Hole Drilling Cycle I–44
   - 7.2 G87 Side Deep Hole Drilling Cycle I–48
   - 7.3 G87 Side Spot Drilling Cycle I–52
   - 7.4 G87 Side Spot Drilling Cycle (Dwell) I–55

8. G88 Side Tapping Cycle I–58

9. M329 G88 Synchronized Side Tapping Cycle I–62

10. G89 Side Boring Cycle I–66

11. G384, G380 Synchronized Tapping Cycle I–69

12. Cautions on Programming Using G84 and G88 . . . . . I–75
12.1 Dwell Command I–75
12.2 Precautions on Using the Tapper I–75
12.3 To Finish Tapping at Correct Depth in Blind Hole I–76

1. General

Hole machining operation is programmed using several blocks of commands.

A hole machining canned cycle allows hole machining operation which requires several blocks of commands to be programmed using one block of commands including an appropriate G code.

NOTE

① Hole machining canned cycles can be used only with the MC type or Y-axis specification machines. With the models other than MC type and Y-axis specification, these cycles cannot be used.

② With the SL-S series machine, it is not possible to execute a hole machining canned cycle in the state the M268 command is executed. Note that the synchronized tapping cycle called by G384 can be executed in this state.

③ Synchronized tapping cycle can be used only for the MC type and Y-axis specification machines. (Synchronized tapping cycle is not available with the SL-65, SL-65MC, SL-75 and SL-75MC.)

④ With the SL and SL-S series (excludes the SL-25E, the SL-400, the SL-600 series, the SL-65 series and the SL-75 series), the synchronized face tapping cycle (M329 G84) can be optionally used for models other than MC type and Y-axis specification. Note that this cycle can be used only at the center of the spindle.

⑤ With the CL series, the synchronized face tapping cycle (M329 G84) can be optionally used. Note that this cycle can be used only at the center of the spindle.

Basic Pattern of Hole Machining Canned Cycle

Basic command format and movement of the hole machining canned cycle are explained below:

<Movement>

– Face hole machining canned cycle (G83 - G85)

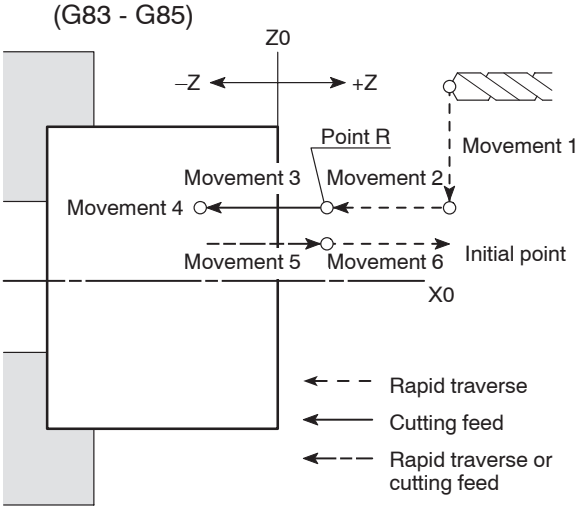

– Side hole machining canned cycle (G87 - G89)

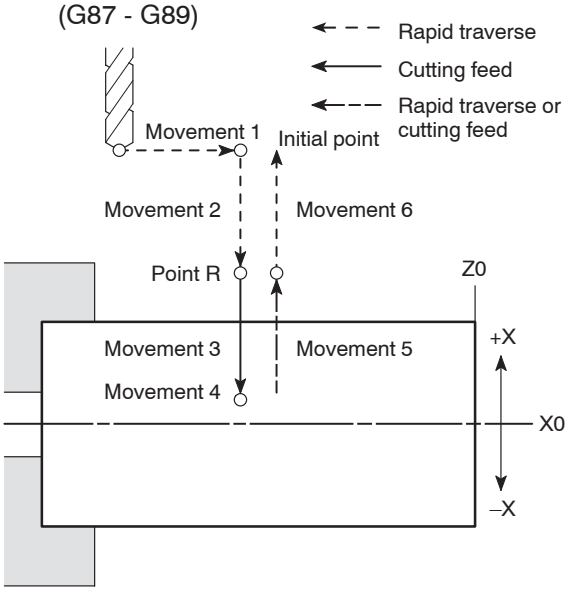

A hole machining canned cycle consists of movements 1 to 6 shown in the diagram.

In the cycle called by G83 to G85, the Z-axis is used as the hole machining axis while the X-axis is used as the hole machining axis in the cycle called by G87 to G89. With the exception of the difference in the hole machining axis, movements 1, 2 and 6 are common to all types of hole machining canned cycles.

Movements 3 to 5 vary according to respective canned cycles.

For a hole machining canned cycle, “initial point” and “point R” indicate the following positions:

– Initial point . . . The position where a hole machining canned cycle starts

– Point R . . . . . The position where hole machining (axis feed at cutting feedrate) cycle starts

Movement 1: Positioning at the hole machining start position

Movement 2: Moving to point R at a rapid traverse rate

Movement 3: Hole machining (Hole machining is carried out.)

Movement 4: Movement at hole bottom

Specify dwell if necessary.

Movement 5: Returning to point R level

NOTE Whether the Z-axis return movement is executed at a rapid traverse rate or cutting feedrate is determined by the G code specified for calling the hole machining canned cycle.

Movement 6: Positioning at initial point at rapid traverse rate

COMMAND

1. Face hole machining canned cycle

G83 - G85 X(U)_ C(H)_ Z(W)_
R_ Q_ P_ F_ K_ (M68);
G83 - G85 X(U)_ Y(V)_ Z(W)_
R_ Q_ P_ F_ K_ (M68);
G80;

- G83 - G85 . . . . Calls a face hole machining canned cycle.

  NOTE Operation mode from movement 3 to movement 5 is determined according the specified G code.

- G80 . . . . . Cancels a hole machining canned cycle.
- X, C, Y . . . . . Absolute command

  Specifies the hole machining positions. (Movement 1)

- U, H, V . . . . . Incremental command

  Specifies the distance and direction of the hole machining position in reference to the previous block. (Movement 1)

- Z . . . . . Absolute command

  Specifies the hole bottom.

- W . . . . . Incremental command

  Specifies the distance and direction of the hole bottom in reference to the point R.

- R . . . . . Incremental command

  Specifies the distance and direction of the point R in reference to the initial point.

- Q . . . . . Specifies depth of cut per one infeed motion (G83).
- P . . . . . Specifies the period of dwell function executed at the hole bottom.

  P1500 → 1.5 sec

- F . . . . . Specifies feedrate.

- K . . . . . Specifies the number of repetitions.

  NOTE

  K1 . . . . . At the position specified in the block containing K1, hole machining cycle is executed once. (Omissible)

  K2 to K9999 . . . At the position specified in the block containing a K command, hole machining cycle is repeated by the specified number of times.

- (M68) . . . . . Spindle or spindle 1 brake clamp (C-axis clamp or C-axis clamp of spindle 1)

  Specify M68 to carry out heavy-duty cutting.

COMMAND

2. Side hole machining canned cycle

G87 - G89 Z(W)_ C(H)_ X(U)_
R_ Q_ P_ F_ K_ (M68);
G87 - G89 Z(W)_ Y(V)_ X(U)_
R_ Q_ P_ F_ K_ (M68);
G80;

- G87 - G89 . . . . Calls a side hole machining canned cycle.

  NOTE

  Operation mode from movement 3 to movement 5 is determined according the specified G code.

- G80 . . . . . Cancels a hole machining canned cycle.
- Z, C, Y . . . . . Absolute command

  Specifies the hole machining positions. (Movement 1)

- W, H, V . . . . . Incremental command

  Specifies the distance and direction of the hole machining position in reference to the previous block. (Movement 1)

- X . . . . . Absolute command

  Specifies the hole bottom.

- U . . . . . Incremental command

  Specifies the distance and direction of the hole bottom in reference to the point R.

- R . . . . . Incremental command

  Specifies the distance and direction of the point R in reference to the initial point.

- Q . . . . . Specifies depth of cut per one infeed motion (G87).
- P . . . . . Specifies the period of dwell function executed at the hole bottom.

  P1500 → 1.5 sec
- F . . . . . Specifies feedrate.
- K . . . . . Specifies the number of repetitions.

  K1 . . . . . At the position specified in the block containing K1, hole machining cycle is executed once. (Omissible)

  K2 to K9999 . . . At the position specified in the block containing a K command, hole machining cycle is repeated by the specified number of times.
- (M68) . . . . . Spindle or spindle 1 brake clamp (C-axis clamp or C-axis clamp of spindle 1)

  Specify M68 to carry out heavy-duty cutting.

NOTE

① In the F15 format, use address L to specify the number of repetitions.

② When the M68 command (spindle or spindle 1 brake clamp (C-axis clamp or C-axis clamp of spindle 1)) is specified, M68 is output before the start of operation 2 and M69 (spindle or spindle 1 brake unclamp (C-axis unclamp or C-axis unclamp of spindle 1)) is output at the completion of operation 5.

Dwell is executed for the time set for parameter No. 5111 after that.

1.1 Number of Repetitions “K”

When machining the holes of the same dimensions, arranged in equal intervals, it is possible to repeat the same hole machining canned cycle by specifying the number of repetitions following address K. Therefore, the use of a K command can simplify programming.

K1

When K1 is specified, hole machining cycle is executed once at the specified position.

“K1” is omissible. If no K command is specified, it is equivalent to the designation of “K1”.

⋮

G83 X150.0 C30.0 Z–18.0 R–27.0 F100 (K1);

. . . . . After positioning at (X150.0, C30.0), hole machining cycle is executed.

C90.0; ┐ . . . . . After positioning at the specified position, hole

C150.0; ┘ machining cycle is executed.

⋮

K2 to K9999

When Kn (n = 2 to 9999) is specified, the specified hole machining cycle is repeated by the specified number of times.

This is used for machining holes arranged in the same intervals.

NOTE If Kn (n = 2 to 9999) is specified, specify the position of the first hole in an incremental mode command.

If an absolute mode command is used to specify the position of the first hole, hole machining cycle is repeated by the specified number of times at the first hole position.

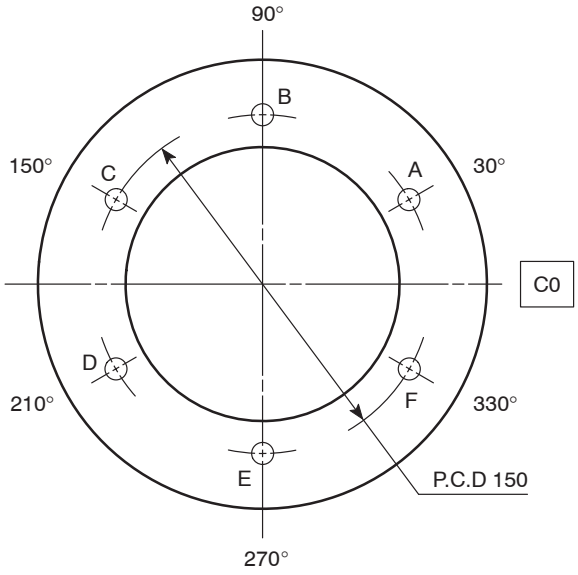

⋮

G98 G00 X150.0 C30.0 Z30.0; . . . . . Moving to X150.0, C30.0 (A in the illustration above) at a rapid traverse rate

G83 H60.0 Z–18.0 R–27.0 F100 K6;

. . . . . The specified hole machining cycle is executed at B, C, D, E, F, and A.

⋮

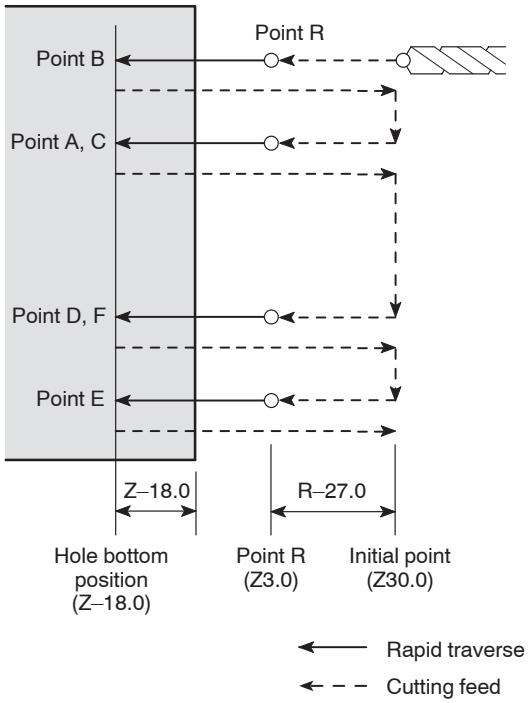

- G83 . . . . . Hole machining canned cycle
- H60.0 . . . . . Specifies angular intervals between the holes (B → C → D → E → F → A) in an incremental value.
- Z–18.0 . . . . . Z coordinate value of the point Z (hole bottom)
- R–27.0 . . . . . Specifies the distance and direction from initial point to point R.
- F100 . . . . . Feedrate of 100 mm/min
- K6 . . . . . Specifies the number of times (6 times) the hole machining cycle should be repeated.

  The hole machining cycle is executed once at each of the six positions B, C, D, E, F, and A.

1.2 Operation Methods in Hole Machining Canned Cycles (G Codes)

The patterns and operation methods called by the hole machining canned cycle G codes are briefly explained below using diagrams. Typical applications and cautions are also described.

1.2.1 Face Hole Machining Canned Cycle

The face hole machining canned cycle indicates the canned cycle in which hole machining is executed by the Z-axis with positioning executed by the combination of X- and C-axes or X- and Y-axes.

G83 High-speed deep hole drilling	G83 Deep hole drilling	G83 Spot drilling
<XC plane> G83 X(U)_ C(H)_ Z(W)_ R_ Q_ P_ F_ ; <XY plane> G83 X(U)_ Y(V)_ Z(W)_ R_ Q_ P_ F_ ;	<XC plane> G83 X(U)_ C(H)_ Z(W)_ R_ Q_ P_ F_ ; <XY plane> G83 X(U)_ Y(V)_ Z(W)_ R_ Q_ P_ F_ ;	<XC plane> G83 X(U)_ C(H)_ Z(W)_ R_ F_ ; <XY plane> G83 X(U)_ Y(V)_ Z(W)_ R_ F_ ;
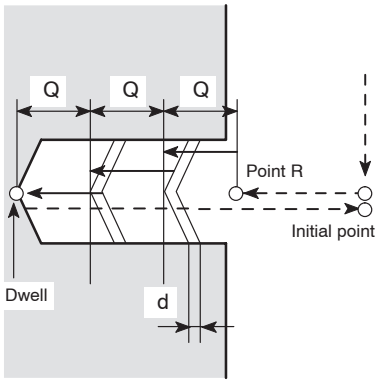 Parameter No. 5101.2 = 0 (setting made before shipping the machine)	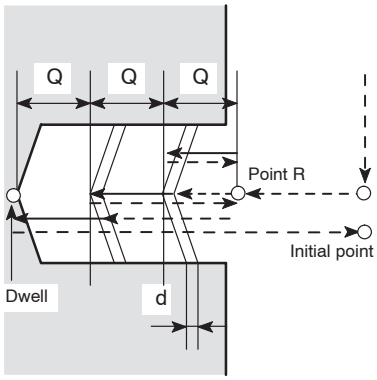 Parameter No. 5101.2 = 1	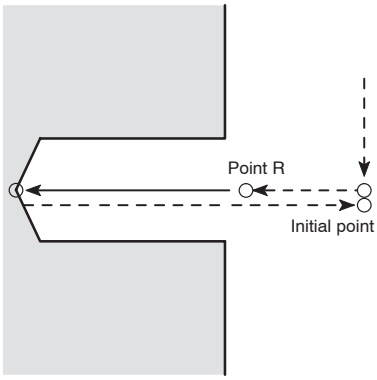
Deep hole drilling Q: Depth of cut per pass d: Retraction stroke	Deep hole drilling Q: Depth of cut per pass d: Clearance amount	Centering Drilling shallow holes

G83 Spot drilling (dwell)	G84 Tapping	G85 Boring
<XC plane> G83 X(U)_ C(H)_ Z(W)_ R_ P_ F_ ; <XY plane> G83 X(U)_ Y(V)_ Z(W)_ R_ P_ F_ ;	<XC plane> G84 X(U)_ C(H)_ Z(W)_ R_ P_ F_ ; <XY plane> G84 X(U)_ Y(V)_ Z(W)_ R_ P_ F_ ;	<XC plane> G85 X(U)_ C(H)_ Z(W)_ R_ F_ ; <XY plane> G85 X(U)_ Y(V)_ Z(W)_ R_ F_ ;
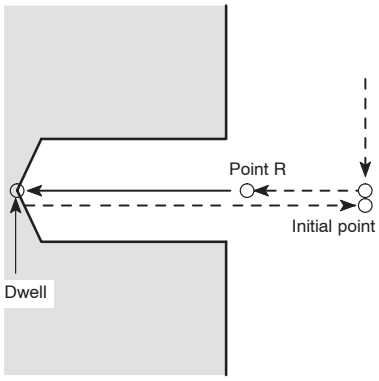	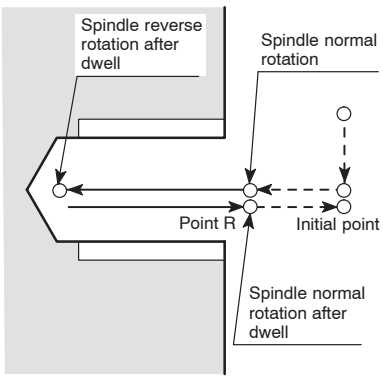	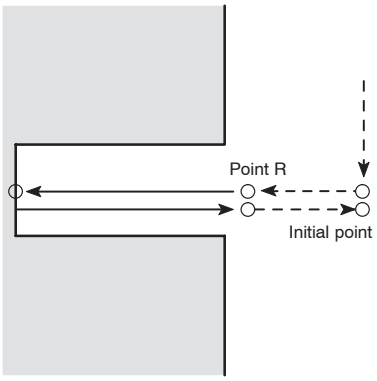
Centering Drilling shallow holes	Tapping (Tapper is used.)	Reaming and boring (Return movement from the hole bottom to the point R is executed at the feedrate two times the specified feedrate.)

G85 Boring (dwell)	G384 Synchronized tapping	G329 G84 Synchronized tapping
<XC plane> G85 X(U)_ C(H)_ Z(W)_ R_ P_ F_ ; <XY plane> G85 X(U)_ Y(V)_ Z(W)_ R_ P_ F_ ;	<XC plane> G384 X(U)_ C(H)_ Z(W)_ R_ F_ S_ D_ E_ M_ T2.(T3.); <XY plane> G384 X(U)_ Y(V)_ Z(W)_ R_ F_ S_ D_ E_ M_ T2.(T3.) ;	<XC plane> M329 S_ ; G84 X(U)_ C(H)_ Z(W)_ R_ P_ F_ ; <XY plane> M329 S_ ; G84 X(U)_ Y(V)_ Z(W)_ R_ P_ F_ ;
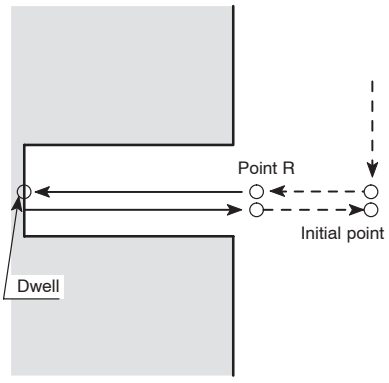	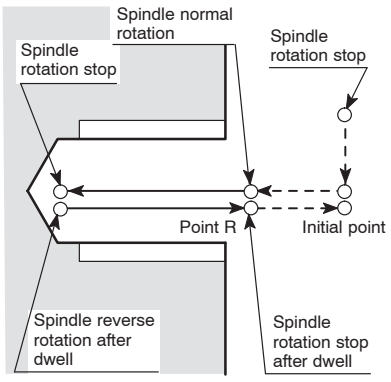	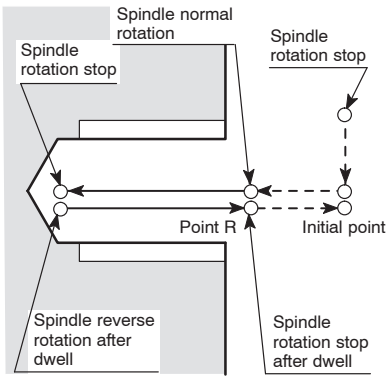
Reaming and boring (Return movement from the hole bottom to the point R is executed at the feedrate two times the specified feedrate.)	Tapping (No tapper is used.) <Only for SL, SL-S series (excludes the SL-400, SL-600, SL-65, and SL-75 series)>	Tapping (No tapper is used.) <Only for TL, SL and SL-S series (excludes the SL-65 and SL-75 series)>

1.2.2 Side Hole Machining Canned Cycle

The side hole machining canned cycle indicates the canned cycle in which hole machining is executed by the X-axis with positioning executed by the combination of Z- and C-axes or Z- and Y-axes.

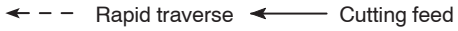

G87 High-speed deep hole drilling	G87 Deep hole drilling	G87 Spot drilling
<ZC plane> G87 Z(W)_ C(H)_ X(U)_ R_ Q_ P_ F_ ; <ZY plane> G87 Z(W)_ Y(V)_ X(U)_ R_ Q_ P_ F_ ;	<ZC plane> G87 Z(W)_ C(H)_ X(U)_ R_ Q_ P_ F_ ; <ZY plane> G87 Z(W)_ Y(V)_ X(U)_ R_ Q_ P_ F_ ;	<ZC plane> G87 Z(W)_ C(H)_ X(U)_ R_ F_ ; <ZY plane> G87 Z(W)_ Y(V)_ X(U)_ R_ F_ ;
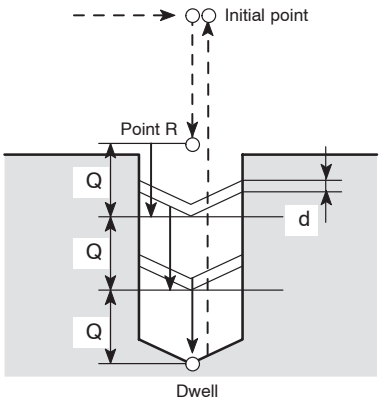 Parameter No. 5101.2 = 0 (setting made before shipping the machine)	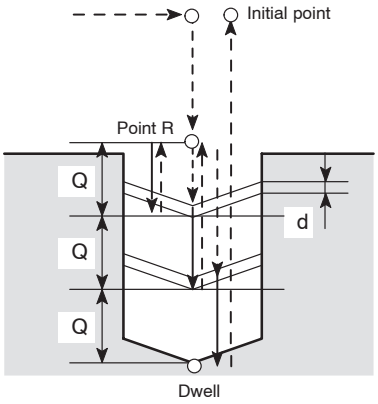 Parameter No. 5101.2 = 1	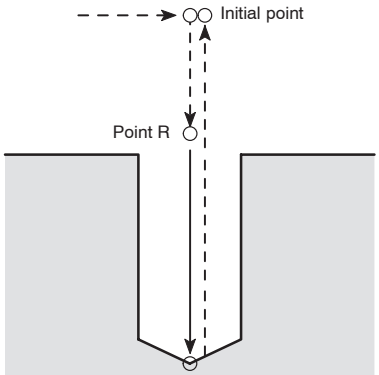
Deep hole drilling Q: Depth of cut per pass d: Retraction stroke	Deep hole drilling Q: Depth of cut per pass d: Clearance amount	Centering Drilling shallow holes

G87 Spot drilling (dwell)	G88 Tapping	G89 Boring
<ZC plane> G87 Z(W)_ C(H)_ X(U)_ R_ P_ F_ ; <ZY plane> G87 Z(W)_ Y(V)_ X(U)_ R_ P_ F_ ;	<ZC plane> G88 Z(W)_ C(H)_ X(U)_ R_ P_ F_ ; <ZY plane> G88 Z(W)_ Y(V)_ X(U)_ R_ P_ F_ ;	<ZC plane> G89 Z(W)_ C(H)_ X(U)_ R_ F_ ; <ZY plane> G89 Z(W)_ Y(V)_ X(U)_ R_ F_ ;
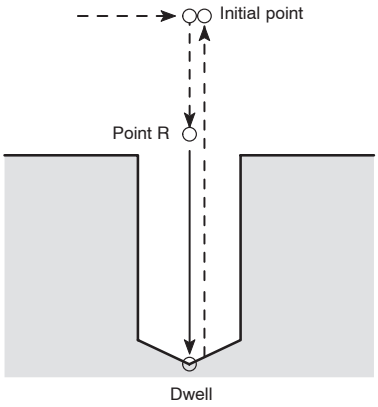	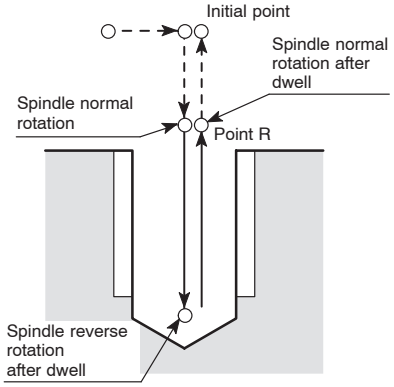	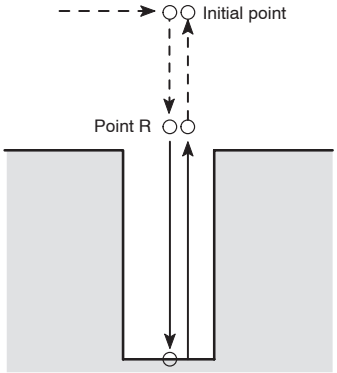
Centering Drilling shallow holes	Tapping (Tapper is used.)	Reaming and boring (Return movement from the hole bottom to the point R is executed at the feedrate two times the specified feedrate.)

G89 Boring (dwell)	G384 Synchronized tapping	G329 G88 Synchronized tapping
<ZC plane> G89 Z(W)_ C(H)_ X(U)_ R_ P_ F_ ; <ZY plane> G89 Z(W)_ Y(V)_ X(U)_ R_ P_ F_ ;	<ZC plane> G384 Z(W)_ C(H)_ X(U)_ R_ F_ S_ D_ E_ M_ T1.(T4.); <ZY plane> G384 Z(W)_ Y(V)_ X(U)_ R_ F_ S_ D_ E_ M_ T1.(T4.) ;	<ZC plane> M329 S_ ; G88 Z(W)_ C(H)_ X(U)_ R_ P_ F_ ; <ZY plane> M329 S_ ; G88 Z(W)_ Y(V)_ X(U)_ R_ P_ F_ ;
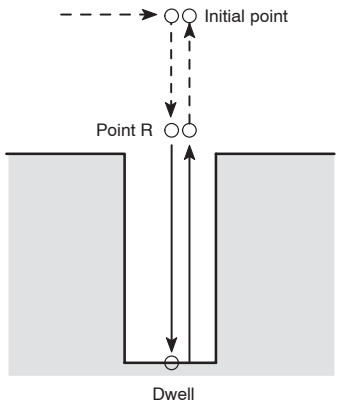	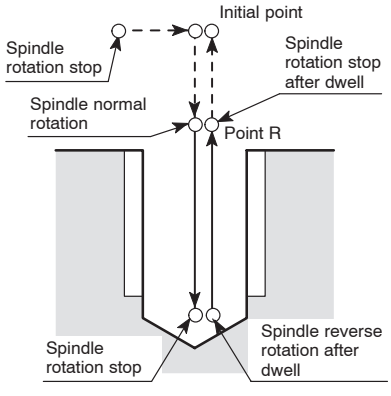	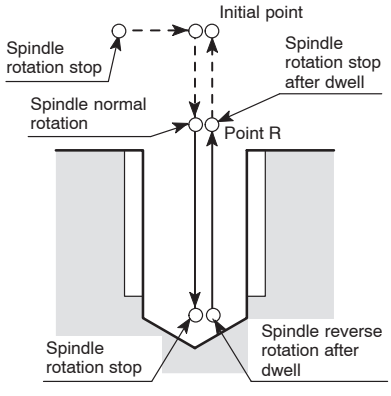
Reaming and boring (Return movement from the hole bottom to the point R is executed at the feedrate two times the specified feedrate.)	Tapping (No tapper is used.) <Only for SL, SL-S series (excludes the SL-400, SL-600, SL-65, and SL-75 series)>	Tapping (No tapper is used.) <Only for TL, SL-400, and SL-600 series>

CAUTION

① For the tapping cycle called by G84 or G88, a tapper is used. In this case, the return movement from the bottom of the machined hole to the point R level is made with the tapper extended. Therefore, the point R level must be specified larger value than tapper extending length. If the smaller value is specified, the cutting tool and workpiece may collide or interfere with each other, and this could damage the machine when moving to next machining position.

② When the emergency stop button or the RESET (RESET) key has been pressed to stop the machine during a tapping operation, carefully move the axes after checking the workpiece and cutting tool carefully for damage. If you move the axes without due care, the workpiece and cutting tool may collide or interfere with each other, and this could cause damage to the machine.

NOTE

① If a hole machining canned cycle is interrupted by the emergency stop operation or by pressing the RESET (RESET) key, although the hole machining mode, hole machining data, and hole position data are retained, the number of repetitions is cleared.

② To specify a hole machining canned cycle, select the feed per minute mode by specifying the G98 command, and specify the spindle speed of the rotary tool spindle in the G97 mode.

③ The number of times the called hole machining canned cycle should be repeated is required only when the cycle should be executed repeatedly. Although feedrate value is retained when the hole machining canned cycle is canceled, the repeat number data is not retained.

④ To call a hole machining canned cycle, the spindle should have been rotated by the M13 or M14 command excluding the synchronized tapping cycle.

<Good example>

S_ M13; . . . . . Rotary tool spindle normal rotation
⋮
G83 X_ C_ Z_ R_ Q_ P_ F_ ; . . . Good
⋮

<Bad example>

M05; . . . . . Rotary tool spindle stop
⋮
G83 X_ C_ Z_ R_ Q_ P_ F_ ; . . . Not good
⋮

⑤ In the hole machining canned cycle mode, if any data of X, Y, Z, C, U, V, W, H, R, or additional axis is specified in a block, the called hole machining cycle is executed.

In the block that does not contain any of X, Y, Z, C, U, V, W, H, R, or additional axis, the hole machining cycle is not executed.

However, even if an X command is specified, the hole machining cycle is not executed if it is specified following the G04 command which calls the dwell function.

NOTE

⑥ After the completion of hole machining operation executed using a hole machining canned cycle, cancel the hole machining canned cycle by specifying G80 or a G code in 01 group (G00, G01, G02, G03, etc.).

⑦ If the hole bottom position is specified using an incremental command, the following value must be specified.

With an R command . . . . . Distance and direction from the point R to the hole bottom

Without an R command . . . . . Distance and direction from the initial point to the hole bottom

⑧ The hole machining canned cycle mode is canceled by the G80 command or a G code of group 01 (G00, G01, G02, G03, etc.).

G83 X_ C_ Z_ R_ Q_ P_ F_ ;
G00 Z_ C_ ; . . . . . Only Z- and C-axes are moved, the canned cycle is not executed.
G83 X_ C_ Z_ R_ Q_ P_ F_ ;
Z_ C_ ; . . . . . The called canned cycle is executed.

⑨ In the tapping cycle (G84 or G88) which controls the mode of spindle rotation, if the cycle is executed continuously while the distance between the hole positions or the distance from the initial point level to the point R level is short, there may be cases that the rotary tool spindle fails to reach the required speed before it begins tapping operation.

If such a problem is anticipated, enter the dwell command (G04) between tapping operations without specifying the repeat number, as shown in the following program.

⋮
G84 X_ C_ Z_ R_ P_ F_ ;
G04 P_ ; . . . . . Executes dwell and suspends tapping operation
C_ ;
G04 P_ ; . . . . . Executes dwell and suspends tapping operation
C_ ;
⋮

⑩ When miscellaneous function is specified with a G code which calls a hole machining canned cycle in the same block, the M code is output at the first positioning. After the completion of positioning, the next hole machining cycle is started after checking the M code completion signal (FIN).

If the number of repetitions is specified, the M code is output only in the first cycle and is not output after that.

⑪ During the tapping cycle, feedrate override and spindle speed override are fixed to 100% because a fixed lead thread cannot be cut if feedrate or spindle speed is changed during tapping cycle.

⑫ If G80 is specified, the hole machining data and the hole position data are canceled in addition to the G code (G83, G84, G85, G87, G88, and G89) calling for a hole machining canned cycle.

NOTE

⑬ The dry run function is invalid during the execution of a synchronized tapping cycle (G384).

⑭ When a synchronized tapping cycle is executed by specifying the G384 command, the G384 command must be specified in all blocks that call for a synchronized tapping cycle. The synchronized tapping cycle is not executed unless the G384 command is specified. In the second and subsequent synchronized tapping cycle call blocks, specify only the positions where the cycle is executed. These blocks must not include addresses R, F, S, D, E, M, and T.

⑮ After the execution of a synchronized tapping cycle by specifying the G384 command, cancel the synchronized tapping cycle by specifying the G380 command. If a hole machining canned cycle other than the synchronized tapping cycle is specified without canceling the synchronized tapping cycle by specifying the G380 command, an alarm message (3041) is displayed on the screen. It is not allowed to index the turret by a T command during the execution of a synchronized tapping cycle.

⑯ When specifying the synchronized tapping cycle (G384), it is not allowed to specify the number of repetition times.

2. **G80** Hole Machining Canned Cycle Cancel

The G80 command is used to cancel a hole machining canned cycle (G83, G84, G85, G87, G88, and G89) and to allow ordinary operation to be executed.

Since a hole machining canned cycle is modal, once it is specified, the canned cycle mode remains valid until it is canceled with the G80 command. Therefore, after completing the process to be executed in the hole machining canned cycle mode, specify the G80 command in the next block before executing an axis movement command.

G80; . . . . . Cancels a hole machining canned cycle.

① The hole machining canned cycle mode is also canceled if a G code of group 01 (G00, G01, G02, G03, etc.) is executed.

② When the G80 command is specified, the hole machining data and the hole position data are cleared in addition to the G code (G83, G84, G85, G87, G88, and G89) calling for a hole machining canned cycle.

Ex. **Programming using G80**

To carry out the face spot drilling cycle (G83) at points ① to ⑥.

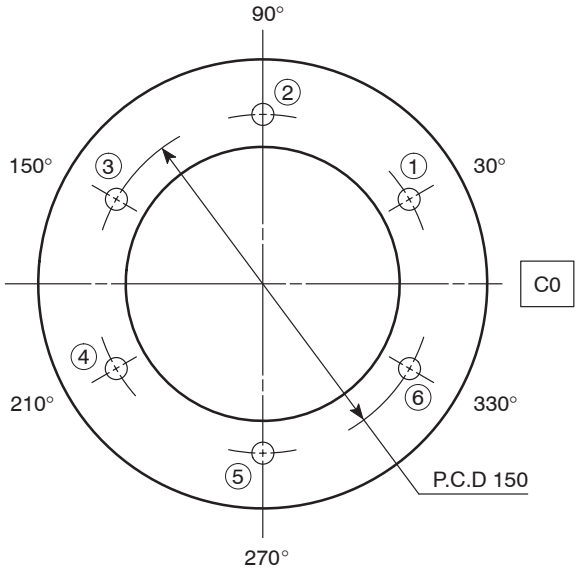

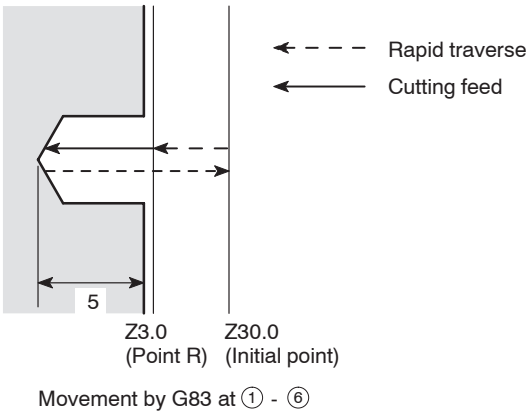

Movement by G83 at ① - ⑥

```
O0001;
N1;
G98; ..... Calling the feed per minute mode
M45; ..... Connecting the spindle or spindle 1 as the C-axis
G28 H0; ..... Returning the C-axis to the machine zero point
G00 T0101;
G97 S1000 M13; ..... Starting the rotary tool spindle in the normal
                     direction at 1000 min–1
X150.0 Z30.0 C30.0; ..... Positioning at point ① (X150.0, C30.0) and initial
                          point (Z30.0) at a rapid traverse rate
G83 Z–5.0 R–27.0 F100; ..... Executing the face spot drilling cycle (G83) at
                             point ①
```

- Z–5.0 ..... Z coordinate value of the point Z (hole bottom)
- R–27.0 ..... Distance and direction from the initial point to the point R
- F100 ..... Feedrate of 100 mm/min

```
C90.0;
C150.0;
C210.0;   ..... Executing the face spot drilling cycle (G83) at
C270.0;         points ② to ⑥
C330.0;
G80; ..... Canceling the face spot drilling cycle mode (G83)
  ⋮
```

If “G00 X_ Y_ ;” is specified, the hole machining canned cycle mode is canceled.

This is because the G00 command, a G code belonging to 01 group, is specified.

3. **G83** Face Drilling Cycle

The G83 face drilling cycle provides the following four hole machining canned cycles.

– Face high-speed deep hole drilling cycle

– Face deep hole drilling cycle

– Face spot drilling cycle

– Face spot drilling cycle (dwell)

3.1 G83 Face High-speed Deep Hole Drilling Cycle

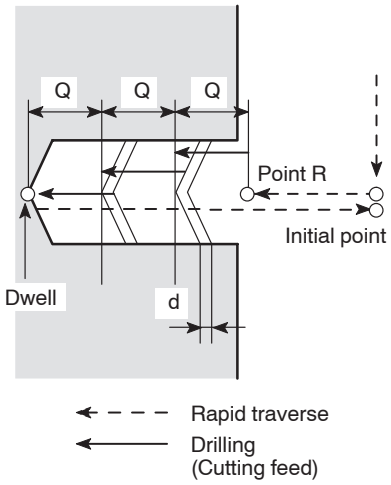

In the G83 face high-speed deep hole drilling cycle, drilling is executed in intermittent axis feed with a fixed depth of cut.

As shown in the illustration in the left, after the infeed of a drill by “Q”, it is returned by “d”, then the next infeed is repeated.

By repeating this infeed and retraction pattern, it is possible to drill a deep hole without applying excessive force to the drill.

NOTE Set “0” for parameter No. 5101.2 to use the face high-speed deep hole drilling cycle (setting made before shipping the machine).

When carrying out drilling on mild or tough workpieces, long chips are apt to entangle on the drill. In such operation, this mode of drilling cycle is used to break chips.

COMMAND

1. Standard format (setting made before shipping the machine)

<XC plane>

G83 X(U)_ C(H)_ Z(W)_ R_ Q_ P_ F_ ;

<XY plane>

G83 X(U)_ Y(V)_ Z(W)_ R_ Q_ P_ F_ ;

2. F15 format

<XC plane>

G17 G83.1 X(U)_ C(H)_ Z(W)_ R_ Q_ P_ F_ ;

<XY plane>

G17 G83.1 X(U)_ Y(V)_ Z(W)_ R_ Q_ P_ F_ ;

- G17 . . . . . Selects the machining plane (XC, XY plane).

  NOTE The Z-axis is used as the hole machining axis.

- G83, G83.1 . . . Calls the face high-speed deep hole drilling cycle.
- X, C, Y . . . . . Absolute command

  Specifies the hole machining positions.

- U, H, V . . . . . Incremental command

  Specifies the distance and direction from the end point of the previous block to the hole position.

- Z . . . . . Absolute command

  Specifies the hole bottom position.

- W . . . . . Incremental command

  Specifies the distance and direction from the point R to the hole bottom.

- R . . . . . <Standard format>

  Specifies the distance and direction from the initial point to the point R (incremental command).

  <F15 format>

  Specifies the point R position (absolute command).

- Q . . . . . Specifies the depth of cut per one infeed motion (unsigned value).

  To be specified in units of 0.001 mm without using a decimal point.

- P . . . . . Specifies the period of dwell function executed at the hole bottom.

  P1000 → 1 sec

- F . . . . . Specifies the feedrate (mm/min).

NOTE

① The return amount “d” is set for parameter No. 5114.

The default setting is “100” (= 0.1 mm).

② Specify address Q in the block in which hole machining operation is specified.

③ If a negative value is specified for address Q, it is invalid. Always specify a positive value for address Q.

Ex. **Programming using G83 (Face high-speed deep hole drilling cycle)**

To carry out the face high-speed deep hole drilling cycle (G83) at points ① to ⑥. (XC plane)

NOTE Set “0” for parameter No. 5101.2 to use the face high-speed deep hole drilling cycle (setting made before shipping the machine).

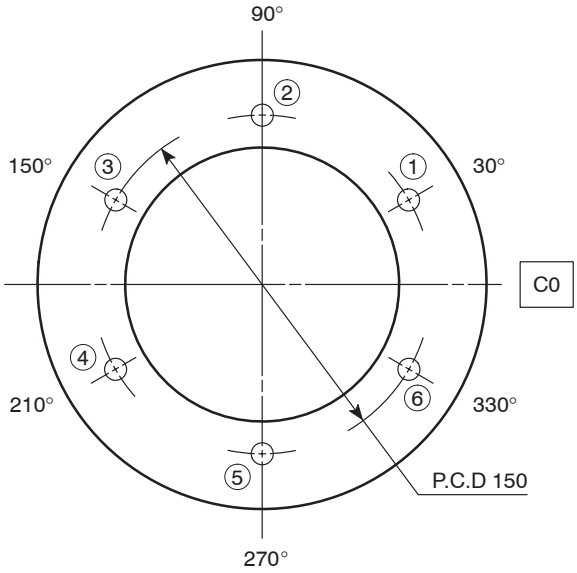

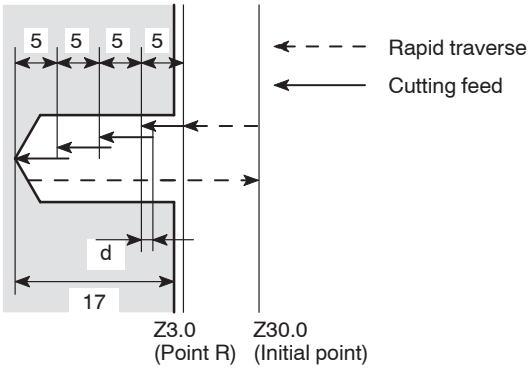

Dwell at hole bottom for 0.1 sec
Movement by G83 at ① - ⑥

```
O0001;
N1;
G98; ..... Calling the feed per minute mode
M45; ..... Connecting the spindle or spindle 1 as the C-axis
G28 H0; ..... Returning the C-axis to the machine zero point
G00 T0101;
G97 S1000 M13; ..... Starting the rotary tool spindle in the normal
                     direction at 1000 min–1
X150.0 Z30.0 C30.0; ..... Positioning at point ① (X150.0, C30.0) and initial
                          point (Z30.0) at a rapid traverse rate
G83 Z–17.0 R–27.0 Q5000 P100 F100;
..... Executing the face high-speed deep hole drilling
      cycle (G83) at point ①
```

- Z–17.0 ..... Z coordinate value of the point Z (hole bottom)
- R–27.0 ..... Distance and direction from the initial point to the point R
- Q5000 ..... Depth of cut per one infeed motion: 5 mm

- P100 . . . . . Dwell period at hole bottom for 0.1 sec

  Rotary tool spindle 1 turn time (sec)

  $$= \frac{60 \text{ (sec)}}{\text{spindle speed (min}^{-1})}$$

  = 0.06 < 0.1 (sec)

  thus, the rotary tool spindle rotates more than one turn.

- F100 . . . . . Feedrate of 100 mm/min

```
C90.0 Q5000;
C150.0 Q5000;
C210.0 Q5000;      . . . . . Executing the face high-speed deep hole drilling
C270.0 Q5000;               cycle (G83) at points ② to ⑥
C330.0 Q5000;
G80;  . . . . . Canceling the face high-speed deep hole drilling
                cycle mode (G83)
G00 X200.0 Z100.0 M05;  . . . . . Stopping the rotary tool spindle
M46;  . . . . . Canceling the C-axis connection
G99;  . . . . . Calling the feed per revolution mode
M01;
   ⋮
```

3.2 G83 Face Deep Hole Drilling Cycle

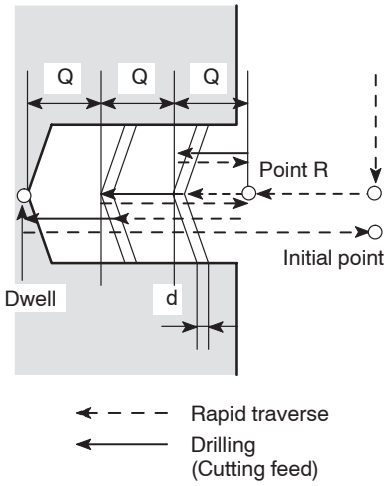

In the G83 face deep hole drilling cycle, drilling is executed in intermittent axis feed with a fixed depth of cut.

As shown in the illustration in the left, after the infeed of a drill by “Q”, the drill is returned to the point R at a rapid traverse rate. In the next infeed, the drill is moved to the point which is above the depth drilled in the previous operation by clearance amount “d” at a rapid traverse rate, then it is fed by “Q”.

By repeating this infeed and retraction pattern, it is possible to drill a deep hole without applying excessive force to the drill.

NOTE
Set “1” for parameter No. 5101.2 to use the face deep hole drilling cycle.

When carrying out drilling a deep hole where coolant cannot be supplied satisfactorily or drilling a workpiece which generates entangling chips, this drilling pattern can be effectively used.

COMMAND

1. Standard format (setting made before shipping the machine)

<XC plane>

G83 X(U)_ C(H)_ Z(W)_ R_ Q_ P_ F_ ;

<XY plane>

G83 X(U)_ Y(V)_ Z(W)_ R_ Q_ P_ F_ ;

2. F15 format

<XC plane>

G17 G83 X(U)_ C(H)_ Z(W)_ R_ Q_ P_ F_ ;

<XY plane>

G17 G83 X(U)_ Y(V)_ Z(W)_ R_ Q_ P_ F_ ;

- G17 . . . . . Selects the machining plane (XC, XY plane).

  NOTE The Z-axis is used as the hole machining axis.

- G83 . . . . . Calls the face deep hole drilling cycle.
- X, C, Y . . . . . Absolute command

  Specifies the hole machining positions.

- U, H, V . . . . . Incremental command

  Specifies the distance and direction from the end point of the previous block to the hole position.

- Z . . . . . Absolute command

  Specifies the hole bottom position.

- W . . . . . Incremental command

  Specifies the distance and direction from the point R to the hole bottom.

- R . . . . . <Standard format>

  Specifies the distance and direction from the initial point to the point R (incremental command).

  <F15 format>

  Specifies the point R position (absolute command).

- Q . . . . . Specifies the depth of cut per one infeed motion (unsigned value).

  To be specified in units of 0.001 mm without using a decimal point.

- P . . . . . Specifies the period of dwell function executed at the hole bottom.

  P1000 → 1 sec

- F . . . . . Specifies the feedrate (mm/min).

NOTE
① The clearance amount “d” is set for parameter No. 5114.

The default setting is “100” (= 0.1 mm).

② Specify address Q in the block in which hole machining operation is specified.

③ If a negative value is specified for address Q, it is invalid. Always specify a positive value for address Q.

Ex. **Programming using G83 (Face deep hole drilling cycle)**

To carry out the face deep hole drilling cycle (G83) at points ① to ⑥. (XC plane)

NOTE Set “1” for parameter No. 5101.2 to use the face deep hole drilling cycle (setting made before shipping the machine).

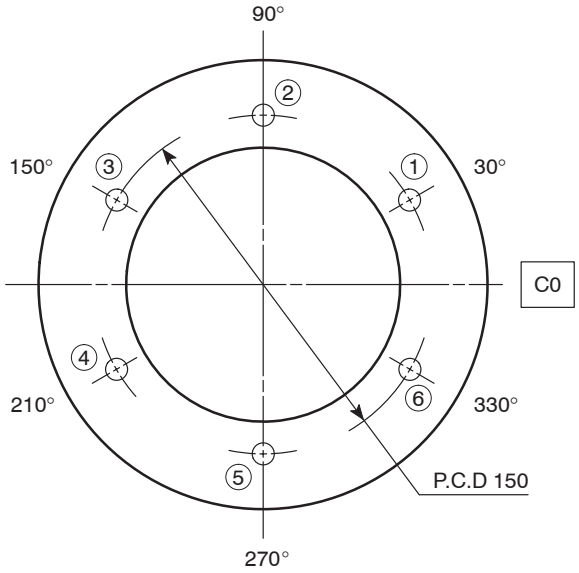

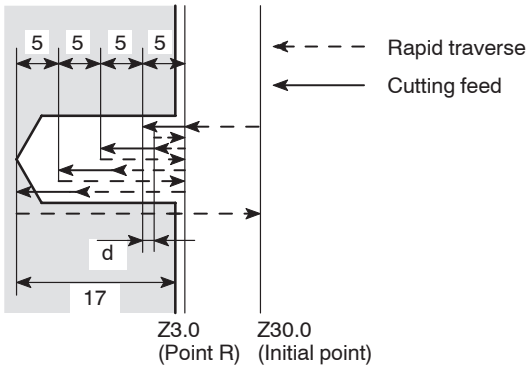

Dwell at hole bottom for 0.1 sec
Movement by G83 at ① - ⑥

```
O0001;
N1;
G98; ..... Calling the feed per minute mode
M45; ..... Connecting the spindle or spindle 1 as the C-axis
G28 H0; ..... Returning the C-axis to the machine zero point
G00 T0101;
G97 S1000 M13; ..... Starting the rotary tool spindle in the normal
                     direction at 1000 min−1
X150.0 Z30.0 C30.0; ..... Positioning at point ① (X150.0, C30.0) and initial
                          point (Z30.0) at a rapid traverse rate
```

G83 Z–17.0 R–27.0 Q5000 P100 F100;

. . . . . Executing the face deep hole drilling cycle (G83) at point ①

- Z–17.0 . . . . . Z coordinate value of the point Z (hole bottom)
- R–27.0 . . . . . Distance and direction from the initial point to the point R
- Q5000 . . . . . Depth of cut per one infeed motion: 5 mm
- P100 . . . . . Dwell period at hole bottom for 0.1 sec

  Rotary tool spindle 1 turn time (sec)

  $$= \frac{60 \text{ (sec)}}{\text{spindle speed (min}^{-1})}$$

  $= 0.06 < 0.1$ (sec)

  thus, the rotary tool spindle rotates more than one turn.
- F100 . . . . . Feedrate of 100 mm/min

C90.0 Q5000;
C150.0 Q5000;
C210.0 Q5000;
C270.0 Q5000;
C330.0 Q5000; . . . . . Executing the face deep hole drilling cycle (G83) at points ② to ⑥

G80; . . . . . Canceling the face deep hole drilling cycle mode (G83)

G00 X200.0 Z100.0 M05; . . . . . Stopping the rotary tool spindle

M46; . . . . . Canceling the C-axis connection

G99; . . . . . Calling the feed per revolution mode

M01;

⋮

3.3 G83 Face Spot Drilling Cycle

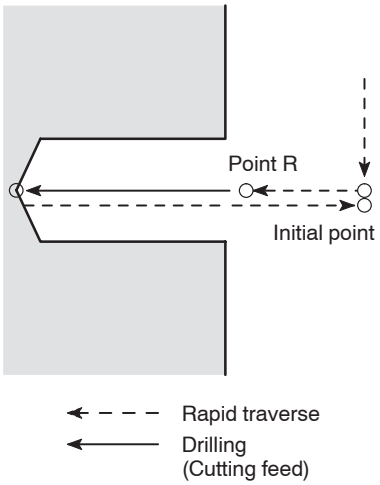

The face spot drilling cycle is a simple cycle in which drilling is carried out in the –Z direction and then the cutting tool is returned at a rapid traverse rate.

The G83 face spot drilling cycle is used for machining a center hole by a centering drill or drilling of comparatively shallow hole.

COMMAND

1. Standard format (setting made before shipping the machine)

<XC plane>

G83 X(U)_ C(H)_ Z(W)_ R_ F_ ;

<XY plane>

G83 X(U)_ Y(V)_ Z(W)_ R_ F_ ;

2. F15 format

<XC plane>

G17 G81 X(U)_ C(H)_ Z(W)_ R_ F_ ;

<XY plane>

G17 G81 X(U)_ Y(V)_ Z(W)_ R_ F_ ;

- G17 . . . . . Selects the machining plane (XC, XY plane).

  NOTE The Z-axis is used as the hole machining axis.

- G83, G81 . . . . Calls the face spot drilling cycle.
- X, C, Y . . . . . Absolute command

  Specifies the hole machining positions.
- U, H, V . . . . . Incremental command

  Specifies the distance and direction from the end point of the previous block to the hole position.
- Z . . . . . Absolute command

  Specifies the hole bottom position.
- W . . . . . Incremental command

  Specifies the distance and direction from the point R to the hole bottom.

- R . . . . . <Standard format>

  Specifies the distance and direction from the initial point to the point R (incremental command).

  <F15 format>

  Specifies the point R position (absolute command).

- F . . . . . Specifies the feedrate (mm/min).

Ex. **Programming using G83 (Face spot drilling cycle)**

To carry out the face spot drilling cycle (G83) at points ① to ⑥. (XC plane)

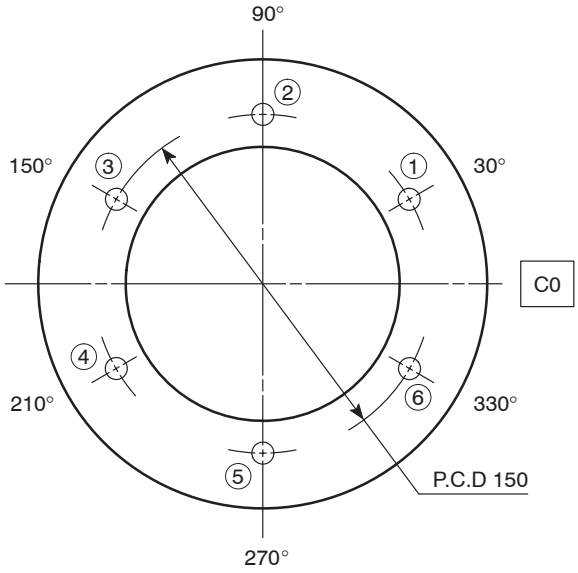

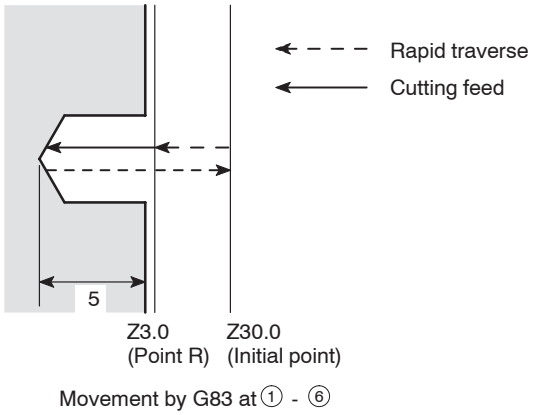

Movement by G83 at ① - ⑥

O0001;

N1;

G98; . . . . . Calling the feed per minute mode

M45; . . . . . Connecting the spindle or spindle 1 as the C-axis

G28 H0; . . . . . Returning the C-axis to the machine zero point

G00 T0101;

G97 S1000 M13; . . . . . Starting the rotary tool spindle in the normal direction at 1000 min^{-1}

X150.0 Z30.0 C30.0; . . . . . Positioning at point ① (X150.0, C30.0) and initial point (Z30.0) at a rapid traverse rate

G83 Z–5.0 R–27.0 F100; . . . . . Executing the face spot drilling cycle (G83) at point ①

- Z–5.0 . . . . . Z coordinate value of the point Z (hole bottom)
- R–27.0 . . . . . Distance and direction from the initial point to the point R
- F100 . . . . . Feedrate of 100 mm/min

```
C90.0;
C150.0;
C210.0;  ..... Executing the face spot drilling cycle (G83) at
C270.0;        points ② to ⑥
C330.0;
G80; ..... Canceling the face spot drilling cycle mode (G83)
G00 X200.0 Z100.0 M05; ..... Stopping the rotary tool spindle
M46; ..... Canceling the C-axis connection
G99; ..... Calling the feed per revolution mode
M01;
   ⋮
```

3.4 G83 Face Spot Drilling Cycle (Dwell)

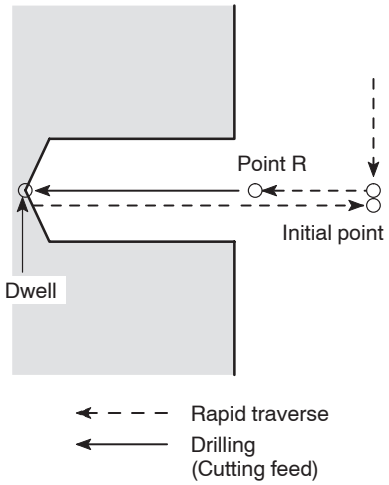

The face spot drilling cycle (dwell) carries out drilling in the –Z direction and returns the tool at a rapid traverse rate.

In the G83 face spot drilling cycle (dwell), accuracy of hole depth in the blind hole machining is improved and surface roughness at the hole bottom is improved as well since dwell is carried out at the hole bottom.

The term “dwell” means suspension of axis movement for the specified period.

COMMAND

1. Standard format (setting made before shipping the machine)

<XC plane>

G83 X(U)_ C(H)_ Z(W)_ R_ P_ F_ ;

<XY plane>

G83 X(U)_ Y(V)_ Z(W)_ R_ P_ F_ ;

2. F15 format

<XC plane>

G17 G82 X(U)_ C(H)_ Z(W)_ R_ P_ F_ ;

<XY plane>

G17 G82 X(U)_ Y(V)_ Z(W)_ R_ P_ F_ ;

- G17 . . . . . Selects the machining plane (XC, XY plane).

  NOTE The Z-axis is used as the hole machining axis.

- G83, G82 . . . . Calls the face spot drilling cycle (dwell).
- X, C, Y . . . . . Absolute command

  Specifies the hole machining positions.

- U, H, V . . . . . Incremental command

  Specifies the distance and direction from the end point of the previous block to the hole position.

- Z . . . . . Absolute command

  Specifies the hole bottom position.

- W . . . . . Incremental command

  Specifies the distance and direction from the point R to the hole bottom.

- R . . . . . <Standard format>

  Specifies the distance and direction from the initial point to the point R (incremental command).

  <F15 format>

  Specifies the point R position (absolute command).

- P . . . . . Specifies the period of dwell function executed at the hole bottom.

  P1000 → 1 sec

- F . . . . . Specifies the feedrate (mm/min).

Ex. **Programming using G83 (Face spot drilling cycle (dwell))**

To carry out the face spot drilling cycle (dwell) (G83) at points ① to ⑥. (XC plane)

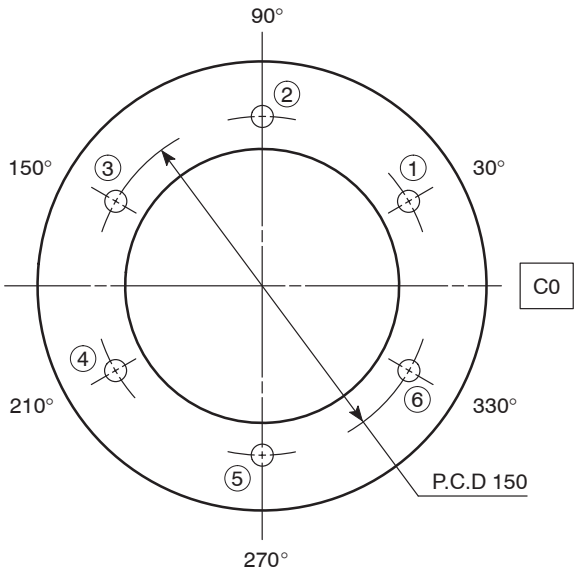

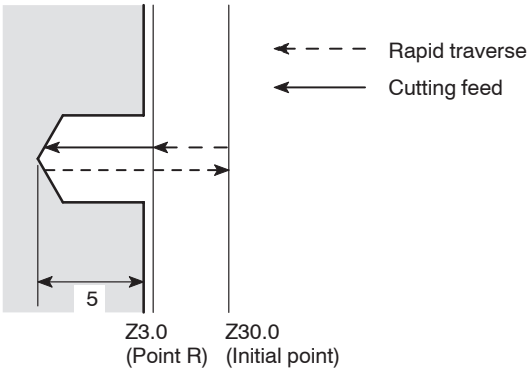

Dwell at hole bottom for 0.1 sec
Movement by G83 at ① - ⑥

```
O0001;
N1;
G98; ..... Calling the feed per minute mode
M45; ..... Connecting the spindle or spindle 1 as the C-axis
G28 H0; ..... Returning the C-axis to the machine zero point
G00 T0101;
G97 S1000 M13; ..... Starting the rotary tool spindle in the normal
                     direction at 1000 min–1
X150.0 Z30.0 C30.0; ..... Positioning at point ① (X150.0, C30.0) and initial
                          point (Z30.0) at a rapid traverse rate
G83 Z–5.0 R–27.0 P100 F100; ..... Executing the face spot drilling cycle (dwell) (G83)
                                  at point ①
```

- Z–5.0 ..... Z coordinate value of the point Z (hole bottom)
- R–27.0 ..... Distance and direction from the initial point to the point R
- P100 ..... Dwell period at hole bottom for 0.1 sec

  Rotary tool spindle 1 turn time (sec)

  $$= \frac{60 \text{ (sec)}}{\text{spindle speed (min}^{-1})}$$

  = 0.06 < 0.1 (sec)

  thus, the rotary tool spindle rotates more than one turn.
- F100 ..... Feedrate of 100 mm/min

```
C90.0;
C150.0;
C210.0;  ..... Executing the face spot drilling cycle (dwell) (G83)
C270.0;        at points ② to ⑥
C330.0;
G80; ..... Canceling the face spot drilling cycle (dwell) mode
           (G83)
G00 X200.0 Z100.0 M05; ..... Stopping the rotary tool spindle
M46; ..... Canceling the C-axis connection
G99; ..... Calling the feed per revolution mode
M01;
   ⋮
```

4. **G84** Face Tapping Cycle

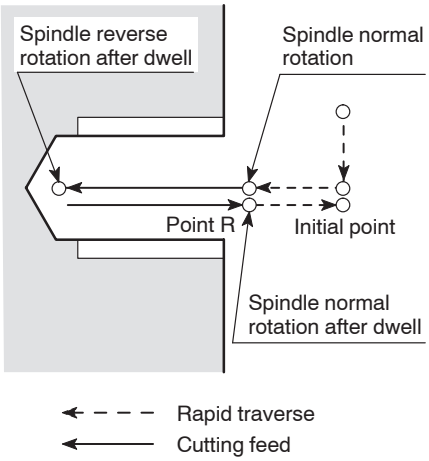

The G84 face tapping cycle is used for machining thread using a tap.

When a cutting tool rotating in the normal direction reaches the specified bottom position, the cutting tool rotating direction is reversed automatically to return to the specified level.

NOTE To use this face tapping cycle, a tapper is used.

COMMAND

1. Standard format (setting made before shipping the machine)

<XC plane>

G84 X(U)_ C(H)_ Z(W)_ R_ P_ F_ ;

<XY plane>

G84 X(U)_ Y(V)_ Z(W)_ R_ P_ F_ ;

2. F15 format

<XC plane>

G17 G84 X(U)_ C(H)_ Z(W)_ R_ P_ F_ ;

<XY plane>

G17 G84 X(U)_ Y(V)_ Z(W)_ R_ P_ F_ ;

- G17 . . . . . Selects the machining plane (XC, XY plane).

  NOTE The Z-axis is used as the hole machining axis.

- G84 . . . . . Calls the face tapping cycle.
- X, C, Y . . . . . Absolute command

  Specifies the hole machining positions.
- U, H, V . . . . . Incremental command

  Specifies the distance and direction from the end point of the previous block to the hole position.
- Z . . . . . Absolute command

  Specifies the hole bottom position.
- W . . . . . Incremental command

  Specifies the distance and direction from the point R to the hole bottom.

- R . . . . . <Standard format>

  Specifies the distance and direction from the initial point to the point R (incremental command).

  <F15 format>

  Specifies the point R position (absolute command).

- P . . . . . Specifies the period of dwell function executed at the hole bottom.

  P1000 → 1 sec

- F . . . . . Specifies the feedrate (mm/min).
  (spindle speed × pitch)

CAUTION

① For the face tapping cycle called by G84, a tapper is used. In this case, the return movement from the bottom of the machined hole to the point R level is made with the tapper extended. Therefore, the point R level must be specified larger value than tapper extending length. If the smaller value is specified, the cutting tool and workpiece may collide or interfere with each other, and this could damage the machine when moving to next machining position.

② When the emergency stop button or RESET (RESET) key has been pressed to stop the machine during a tapping operation, carefully move the axes after checking the workpiece and cutting tool carefully for damage. If you move the axes without due care, the workpiece and cutting tool may collide or interfere with each other, and this could cause damage to the machine.

NOTE

① During the face tapping cycle called by G84, feedrate override and spindle speed override are fixed to 100% because a fixed lead thread cannot be cut if feedrate or spindle speed is changed during face tapping cycle.

② If the SP (SP) switch on the operation panel is pressed during face tapping cycle, face tapping cycle does not stop until the Z-axis returns to the initial point level is completed.

Ex. Programming using G84 (Face tapping cycle)

To carry out the face tapping cycle (G84) (pitch: 2 mm, depth: 20 mm) at points ① to ⑥. (XC plane)

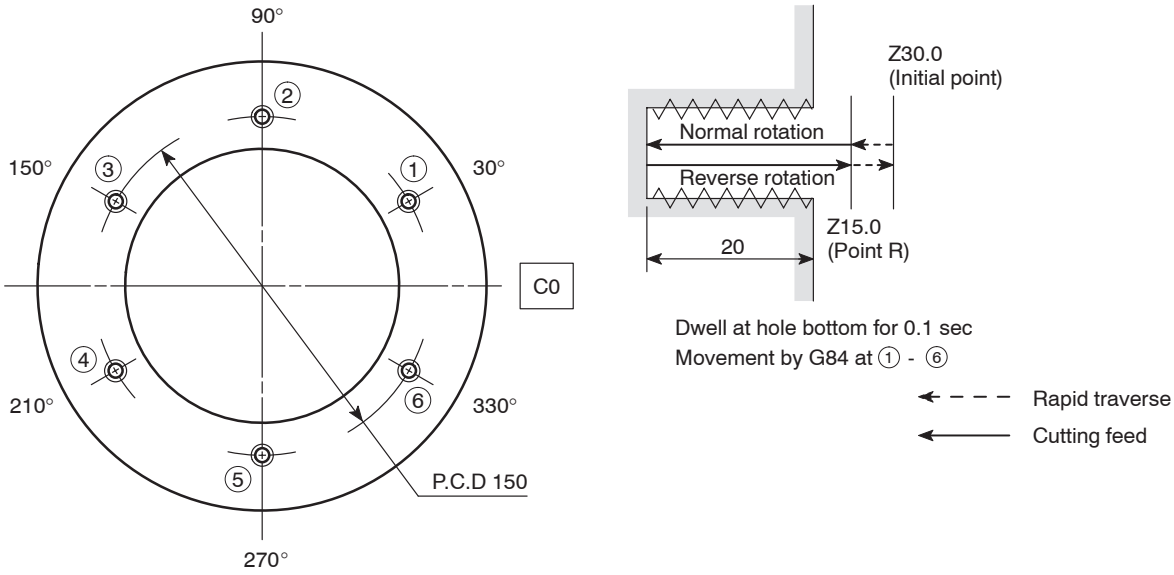

O0001;
N1;
G98; ..... Calling the feed per minute mode
M45; ..... Connecting the spindle or spindle 1 as the C-axis
G28 H0; ..... Returning the C-axis to the machine zero point
G00 T0101;
G97 S300 M13; ..... Starting the rotary tool spindle in the normal direction at 300 min^{-1}
X150.0 Z30.0 C30.0; ..... Positioning at point ① (X150.0, C30.0) and initial point (Z30.0) at a rapid traverse rate
G84 Z–_ R–15.0 P500 F600; ..... Executing the face tapping cycle (G84) at point ①
Tapping is executed up to 20 mm depth.

Feedrate F = Spindle speed (min^{-1}) × Pitch (mm)
= 300 × 2 = 600 (mm/min)

For the Z-axis point, specify
"Z – (20 – tapper elongation in normal rotation + tap engaging length)".

For dwell period P, refer to page I–77.

C90.0;
C150.0;
C210.0; ..... Executing the face tapping cycle (G84) at
C270.0; points ② to ⑥
C330.0;

```
G80; ..... Canceling the face tapping cycle mode (G84)
G00 X200.0 Z100.0 M05; ..... Stopping the rotary tool spindle
M46; ..... Canceling the C-axis connection
G99; ..... Calling the feed per revolution mode
M01;
    ⋮
```

5. **M329 G84** Synchronized Face Tapping Cycle

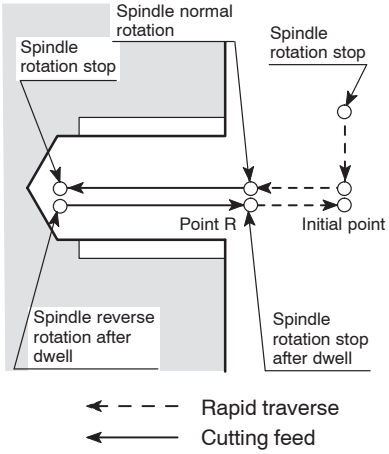

When executing the tapping operation, X- or Z-axis feed amount per rotary tool spindle rotation must be equal to the pitch of the thread to be cut.

With the synchronized face tapping cycle, accurate tapping operation is possible for cutting thread since the rotation of the rotary tool spindle rotation and the Z-axis feed are constantly synchronized.

NOTE

① This cycle can be used for the MC type and Y-axis specification TL series machines, the SL and SL-S series machines (excludes the SL-25E, SL-65, and SL-75 series). Note that the cycle is optional for the MC type TL series machines and the SL and SL-S series (excludes the SL-25E, SL-400, SL-600, SL-65, and SL-75 series).

② With the MC type of TL series machines or the SL, SL-S series (excludes the SL-25E, SL-400, SL-600, SL-65, and SL-75 series) machines, the cycle can be used only at the center of the spindle since spindle rotation and Z-axis feed are synchronized. It is not allowed to use a rotary tool holder for this operation.

③ With the CL series machine, this cycle is optional and can be used only at the center of the spindle.

COMMAND

1. Standard format (setting made before shipping the machine)

<XC plane>

M329 S_ ;
G84 X(U)_ C(H)_ Z(W)_ R_ P_ F_ ;

<XY plane>

M329 S_ ;
G84 X(U)_ Y(V)_ Z(W)_ R_ P_ F_ ;

2. F15 format

<XC plane>

M329 S_ ;
G17 G84.2 X(U)_ C(H)_ Z(W)_ R_ P_ F_ ;

<XY plane>

M329 S_ ;
G17 G84.2 X(U)_ Y(V)_ Z(W)_ R_ P_ F_ ;

- M329 . . . . . Synchronized tapping command
- S . . . . . Spindle speed (min^{-1})
- G17 . . . . . Selects the machining plane (XC, XY plane).

  NOTE The Z-axis is used as the hole machining axis.
- G84 . . . . . Calls the face tapping cycle.
- G84.2 . . . . . Calls the synchronized tapping cycle
- X, C, Y . . . . . Absolute command

  Specifies the hole machining positions.
- U, H, V . . . . . Incremental command

  Specifies the distance and direction from the end point of the previous block to the hole position.
- Z . . . . . Absolute command

  Specifies the hole bottom position.
- W . . . . . Incremental command

  Specifies the distance and direction from the point R to the hole bottom.
- R . . . . . <Standard format>

  Specifies the distance and direction from the initial point to the point R (incremental command).

  <F15 format>

  Specifies the point R position (absolute command).
- P . . . . . Specifies the period of dwell function executed at the hole bottom.

  P1000 → 1 sec
- F . . . . . <Feed per minute mode (G98)>
  Specifies the feedrate (mm/min).
  (spindle speed × pitch)
  <Feed per revolution mode (G99)>
  Specifies the feedrate (mm/rev).
  (pitch)

CAUTION

When the emergency stop button or RESET (RESET) key has been pressed to stop the machine during a synchronized face tapping operation, carefully move the axes after checking the workpiece and cutting tool carefully for damage. If you move the axes without due care, the workpiece and cutting tool may collide or interfere with each other, and this could cause damage to the machine.

NOTE

① During the synchronized face tapping cycle called by G84, feedrate override and spindle speed override are fixed to 100% because a fixed lead thread cannot be cut if feedrate or spindle speed is changed during synchronized face tapping cycle.

② If the (SP) switch on the operation panel is pressed during synchronized face tapping cycle, synchronized face tapping cycle does not stop until the Z-axis returns to the initial point level is completed.

③ To execute the synchronized face tapping cycle on the Y-axis specification TL series machine and the MC type SL-400 and SL-600 series machines, the rotary tool spindle must be stopped.

④ To execute the synchronized face tapping cycle on the MC type TL series machines or the SL and SL-S series machines (excludes the SL-25E, the SL-400 and the SL-600 series), the commands must be specified in the state the spindle is stopped.

⑤ In the synchronized face tapping cycle executed on the Y-axis specification TL series machine and the MC type SL-400, SL-600 and VL-55 series machines, it is not necessary to use a tapper since the Z-axis feed is synchronized with the rotation of the rotary tool spindle.

⑥ In the synchronized face tapping cycle executed on the MC type TL series machine or the SL and SL-S series machines (excludes the SL-25E, the SL-400 and the SL-600 series), it is not necessary to use a tapper since the Z-axis feed is synchronized with the rotation of the spindle.

⑦ With the SL-400, SL-600, and VL-55 series machines, specify the M39 command in a block without other commands or specify a T command to engage the rotary tool clutch before specifying “M329 S_”. If synchronized face tapping cycle is executed without specifying the M39 command or a T command, the rotary tool spindle does not rotate since the clutch is not engaged.

⑧ With the MC type VL-55 machine, there is a spindle speed limit (1000 min^{-1}) that can be used in the synchronized tapping cycle.

Ex. **Programming using M329 G84 (Synchronized face tapping cycle)**

To carry out the synchronized face tapping cycle (M329 G84) (pitch: 2 mm, depth: 20 mm) at points ① to ⑥. (XC plane) (Y-axis specification TL series machine or MC type SL-400 and SL-600 series machines)

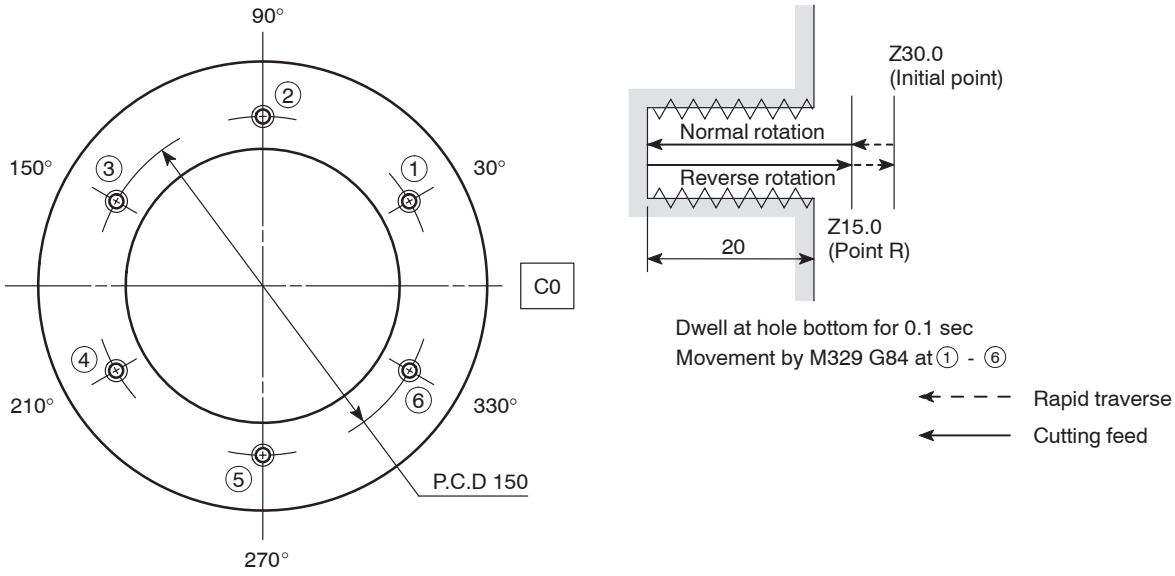

O0001;
N1;
G98 (G99); . . . . . Calling the feed per minute mode

NOTE The command in ( ) is for the feed per revolution mode.

M45; . . . . . Connecting the spindle as the C-axis
G28 H0; . . . . . Returning the C-axis to the machine zero point
G00 T0101;
G97; . . . . . Calling the constant spindle speed control
X150.0 Z30.0 C30.0; . . . . . Positioning at point ① (X150.0, C30.0) and initial point (Z30.0) at a rapid traverse rate

NOTE The rotary tool spindle is stopped.

M329 S300; . . . . . Calling the synchronized tapping cycle

G84 Z–_ R–15.0 F600 (F2.0); . . . . . Executing the synchronized face tapping cycle (M329 G84) at point ①

① Feedrate F = Spindle speed (min^{-1}) × Pitch (mm)
= 300 × 2 = 600 (mm/min)
For the Z-axis point, specify
"Z – (20 + tap engaging length)"

② In the movement from the initial point to the point R, the rotary tool spindle is stopped.

The command in ( ) is for the feed per revolution mode.
Feedrate F = Pitch (mm)

C90.0;
C150.0;
C210.0;
C270.0;
C330.0; . . . . . Executing the synchronized face tapping cycle (M329 G84) at points ② to ⑥

G80; . . . . . Canceling the synchronized face tapping cycle mode (M329 G84)

G00 X200.0 Z100.0 M05; . . . . . Stopping the rotary tool spindle

M46; . . . . . Canceling the C-axis connection

G99; . . . . . Calling the feed per revolution mode

This command is necessary only for the feed per minute mode.

M01;
⋮

6. **G85** Face Boring Cycle

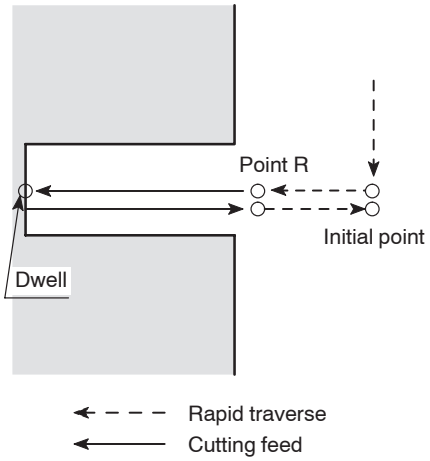

The face boring cycle carries out drilling in the –Z direction and returns the tool at a cutting feedrate.

NOTE Return movement from the hole bottom to the point R is executed at the feedrate two times the specified cutting feedrate.

The G85 face boring cycle is usually used for reaming and boring operation.

COMMAND

1. Standard format (setting made before shipping the machine)

<XC plane>

G85 X(U)_ C(H)_ Z(W)_ R_ P_ F_ ;

<XY plane>

G85 X(U)_ Y(V)_ Z(W)_ R_ P_ F_ ;

2. F15 format

<XC plane>

G17 G89 X(U)_ C(H)_ Z(W)_ R_ P_ F_ ;

<XY plane>

G17 G89 X(U)_ Y(V)_ Z(W)_ R_ P_ F_ ;

- G17 . . . . . Selects the machining plane (XC, XY plane).

  NOTE The Z-axis is used as the hole machining axis.

- G85, G89 . . . . Calls the face boring cycle.
- X, C, Y . . . . . Absolute command

  Specifies the hole machining positions.
- U, H, V . . . . . Incremental command

  Specifies the distance and direction from the end point of the previous block to the hole position.
- Z . . . . . Absolute command

  Specifies the hole bottom position.
- W . . . . . Incremental command

  Specifies the distance and direction from the point R to the hole bottom.

- R . . . . . <Standard format>

  Specifies the distance and direction from the initial point to the point R (incremental command).

  <F15 format>

  Specifies the point R position (absolute command).

- P . . . . . Specifies the period of dwell function executed at the hole bottom.

  P1000 → 1 sec

- F . . . . . Specifies the feedrate (mm/min).

NOTE With the F15 format, when omitting address P, specify the G85 command instead of the G89 command.

Ex. Programming using G85 (Face boring cycle)

To carry out the face boring cycle (G85) at points ① to ⑥. (XC plane)

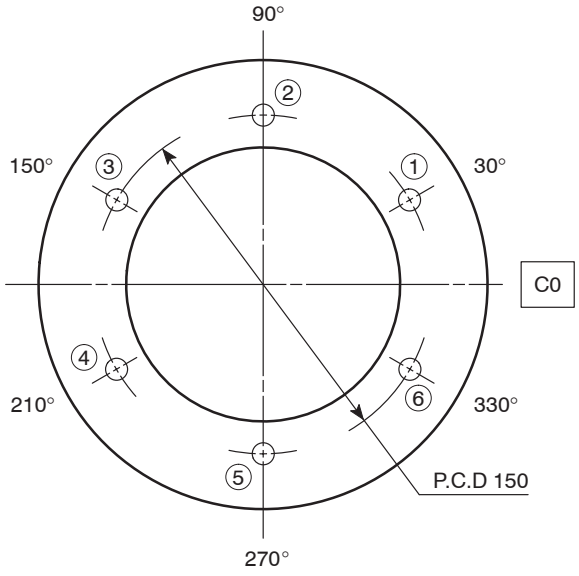

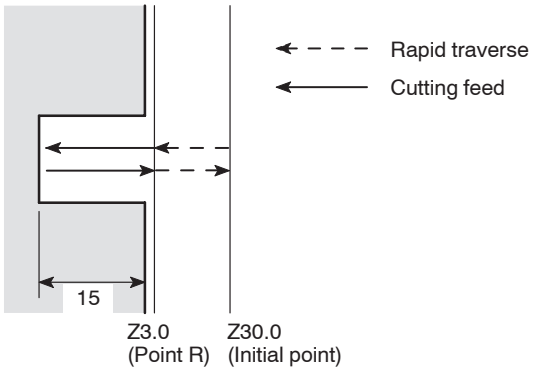

Dwell at hole bottom for 0.1 sec
Movement by G85 at ① - ⑥

O0001;
N1;
G98; . . . . . Calling the feed per minute mode
M45; . . . . . Connecting the spindle or spindle 1 as the C-axis
G28 H0; . . . . . Returning the C-axis to the machine zero point
G00 T0101;
G97 S1000 M13; . . . . . Starting the rotary tool spindle in the normal direction at 1000 min^{-1}
X150.0 Z30.0 C30.0; . . . . . Positioning at point ① (X150.0, C30.0) and initial point (Z30.0) at a rapid traverse rate
G85 Z–15.0 R–27.0 P100 F100; . . . . . Executing the face boring cycle (G85) at point ①

- Z–15.0 . . . . . Z coordinate value of the point Z (hole bottom)
- R–27.0 . . . . . Distance and direction from the initial point to the point R
- P100 . . . . . Dwell period at hole bottom for 0.1 sec

  Rotary tool spindle 1 turn time (sec)

  $$= \frac{60\ (\text{sec})}{\text{spindle speed } (\text{min}^{-1})}$$

  $= 0.06 < 0.1$ (sec)

  thus, the rotary tool spindle rotates more than one turn.
- F100 . . . . . Feedrate of 100 mm/min

C90.0;
C150.0;
C210.0; . . . . . Executing the face boring cycle (G85) at points ② to ⑥
C270.0;
C330.0;
G80; . . . . . Canceling the face boring cycle (G85)
G00 X200.0 Z100.0 M05; . . . . . Stopping the rotary tool spindle
M46; . . . . . Canceling the C-axis connection
G99; . . . . . Calling the feed per revolution mode
M01;
⋮

7. G87 Side Drilling Cycle

The G87 side drilling cycle provides the following four hole machining canned cycles.

– Side high-speed deep hole drilling cycle

– Side deep hole drilling cycle

– Side spot drilling cycle

– Side spot drilling cycle (dwell)

7.1 G87 Side High-speed Deep Hole Drilling Cycle

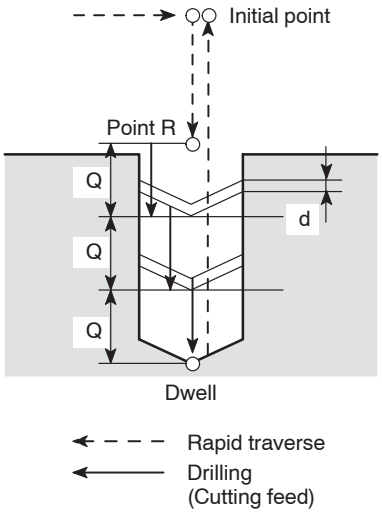

In the G87 side high-speed deep hole drilling cycle, drilling is executed in intermittent axis feed with a fixed depth of cut.

As shown in the illustration in the left, after the infeed of a drill by “Q”, it is returned by “d”, then the next infeed is repeated.

By repeating this infeed and retraction pattern, it is possible to drill a deep hole without applying excessive force to the drill.

NOTE Set “0” for parameter No. 5101.2 to use the side high-speed deep hole drilling cycle (setting made before shipping the machine).

When carrying out drilling on mild or tough workpieces, long chips are apt to entangle on the drill. In such operation, this mode of drilling cycle is used to break chips.

COMMAND

1. Standard format (setting made before shipping the machine)

<ZC plane>

G87 Z(W)_ C(H)_ X(U)_ R_ Q_ P_ F_ ;

<ZY plane>

G87 Z(W)_ Y(V)_ X(U)_ R_ Q_ P_ F_ ;

2. F15 format

<ZC plane>

G19 G83.1 Z(W)_ C(H)_ X(U)_ R_ Q_ P_ F_ ;

<ZY plane>

G19 G83.1 Z(W)_ Y(V)_ X(U)_ R_ Q_ P_ F_ ;

- G19 . . . . . Selects the machining plane (ZC, ZY plane).

  NOTE The X-axis is used as the hole machining axis.

- G87, G83.1 . . . Calls the side high-speed deep hole drilling cycle.
- Z, C, Y . . . . . Absolute command

  Specifies the hole machining positions.

- W, H, V . . . . . Incremental command

  Specifies the distance and direction from the end point of the previous block to the hole position.

- X . . . . . Absolute command

  Specifies the hole bottom position.

- U . . . . . Incremental command

  Specifies the distance and direction from the point R to the hole bottom (in diameter).

- R . . . . . <Standard format>

  Specifies the distance and direction from the initial point to the point R (in radius) (incremental command).

  <F15 format>

  Specifies the point R position (in diameter) (absolute command).

- Q . . . . . Specifies the depth of cut per one infeed motion (unsigned value, in radius).

  To be specified in units of 0.001 mm without using a decimal point.

- P . . . . . Specifies the period of dwell function executed at the hole bottom.

  P1000 → 1 sec

- F . . . . . Specifies the feedrate (mm/min).

NOTE
① The return amount “d” is set for parameter No. 5114.

The default setting is “100” (= 0.1 mm).

② Specify address Q in the block in which hole machining operation is specified.

③ If a negative value is specified for address Q, it is invalid. Always specify a positive value for address Q.

Ex. **Programming using G87 (Side high-speed deep hole drilling cycle)**

To carry out the side high-speed deep hole drilling cycle (G87) at points ① to ⑥. (ZC plane)

NOTE Set “0” for parameter No. 5101.2 to use the side high-speed deep hole drilling cycle (setting made before shipping the machine).

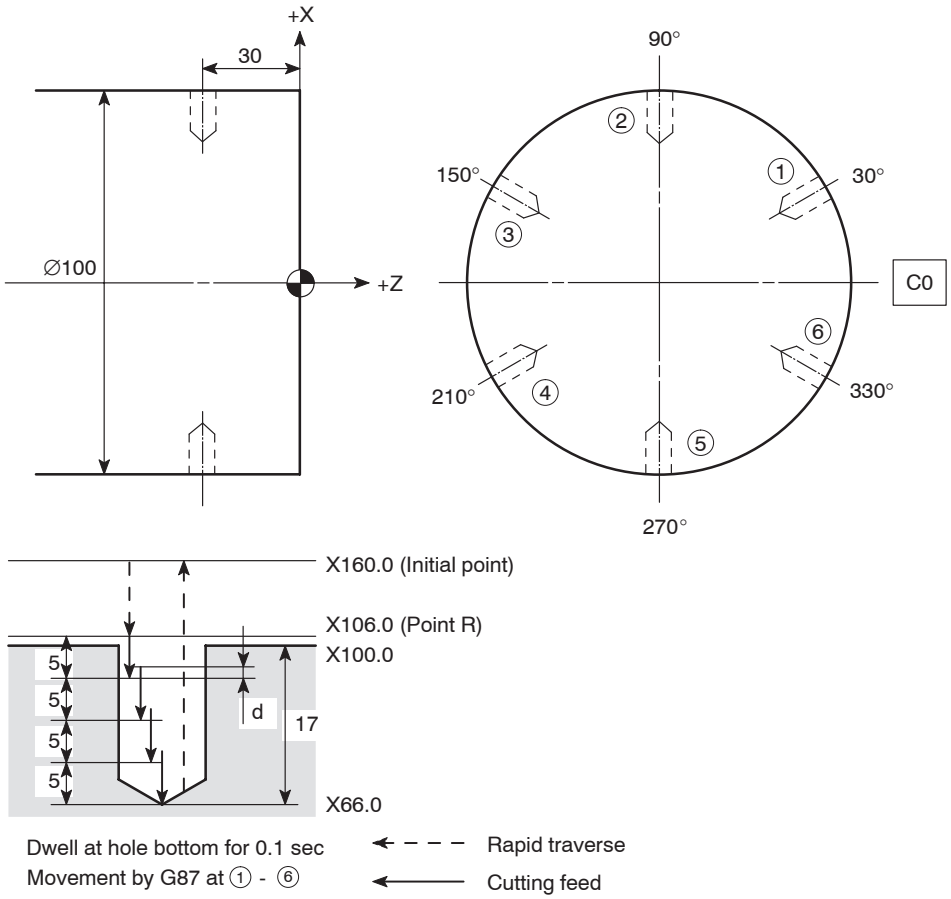


```
O0001;
N1;
G98; ..... Calling the feed per minute mode
M45; ..... Connecting the spindle or spindle 1 as the C-axis
G28 H0; ..... Returning the C-axis to the machine zero point
G00 T0101;
G97 S1000 M13; ..... Starting the rotary tool spindle in the normal
                     direction at 1000 min–1
X160.0 Z–30.0 C30.0; ..... Positioning at point ① (Z–30.0, C30.0) and initial
                           point (X160.0) at a rapid traverse rate
```

G87 X66.0 R–27.0 Q5000 P100 F100;

. . . . . Executing the side high-speed deep hole drilling cycle (G87) at point ①

- X66.0 . . . . . X coordinate value of the point X (hole bottom)
- R–27.0 . . . . . Distance and direction from the initial point to the point R (in radius)
- Q5000 . . . . . Depth of cut per one infeed motion: 5 mm
- P100 . . . . . Dwell period at hole bottom for 0.1 sec

  Rotary tool spindle 1 turn time (sec)

  $$= \frac{60 \text{ (sec)}}{\text{spindle speed (min}^{-1})}$$

  = 0.06 < 0.1 (sec)

  thus, the rotary tool spindle rotates more than one turn.
- F100 . . . . . Feedrate of 100 mm/min

C90.0 Q5000;
C150.0 Q5000;
C210.0 Q5000;
C270.0 Q5000;
C330.0 Q5000;

. . . . . Executing the side high-speed deep hole drilling cycle (G87) at points ② to ⑥

G80; . . . . . Canceling the side high-speed deep hole drilling cycle mode (G87)

G00 X200.0 Z100.0 M05; . . . . . Stopping the rotary tool spindle

M46; . . . . . Canceling the C-axis connection

G99; . . . . . Calling the feed per revolution mode

M01;

⋮

7.2 G87 Side Deep Hole Drilling Cycle

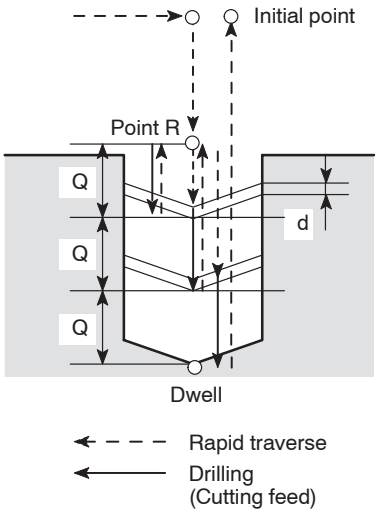

In the G87 side deep hole drilling cycle, drilling is executed in intermittent axis feed with a fixed depth of cut.

As shown in the illustration in the left, after the infeed of a drill by “Q”, the drill is returned to the point R at a rapid traverse rate. In the next infeed, the drill is moved to the point which is above the depth drilled in the previous operation by clearance amount “d” at a rapid traverse rate, then it is fed by Q”.

By repeating this infeed and retraction pattern, it is possible to drill a deep hole without applying excessive force to the drill.

NOTE
Set “1” for parameter No. 5101.2 to use the side deep hole drilling cycle.

When carrying out drilling a deep hole where coolant cannot be supplied satisfactorily or drilling a workpiece which generates entangling chips, this drilling pattern can be effectively used.

COMMAND

1. Standard format (setting made before shipping the machine)

<ZC plane>

G87 Z(W)_ C(H)_ X(U)_ R_ Q_ P_ F_ ;

<ZY plane>

G87 Z(W)_ Y(V)_ X(U)_ R_ Q_ P_ F_ ;

2. F15 format

<ZC plane>

G19 G83 Z(W)_ C(H)_ X(U)_ R_ Q_ P_ F_ ;

<ZY plane>

G19 G83 Z(W)_ Y(V)_ X(U)_ R_ Q_ P_ F_ ;

- G19 . . . . . Selects the machining plane (ZC, ZY plane).

  NOTE The X-axis is used as the hole machining axis.

- G87, G83 . . . . Calls the side deep hole drilling cycle.
- Z, C, Y . . . . . Absolute command

  Specifies the hole machining positions.

- W, H, V . . . . . Incremental command

  Specifies the distance and direction from the end point of the previous block to the hole position.

- X . . . . . Absolute command

  Specifies the hole bottom position.

- U . . . . . Incremental command

  Specifies the distance and direction from the point R to the hole bottom (in diameter).

- R . . . . . <Standard format>

  Specifies the distance and direction from the initial point to the point R (in radius) (incremental command).

  <F15 format>

  Specifies the point R position (in diameter) (absolute command).

- Q . . . . . Specifies the depth of cut per one infeed motion (unsigned value, in radius).

  To be specified in units of 0.001 mm without using a decimal point.

- P . . . . . Specifies the period of dwell function executed at the hole bottom.

  P1000 → 1 sec

- F . . . . . Specifies the feedrate (mm/min).

NOTE
① The clearance amount “d” is set for parameter No. 5114.

The default setting is “100” (= 0.1 mm).

② Specify address Q in the block in which hole machining operation is specified.

③ If a negative value is specified for address Q, it is invalid. Always specify a positive value for address Q.

Ex. **Programming using G87 (Side deep hole drilling cycle)**

To carry out the side deep hole drilling cycle (G87) at points ① to ⑥. (ZC plane)

NOTE Set “1” for parameter No. 5101.2 to use the side deep hole drilling cycle (setting made before shipping the machine).

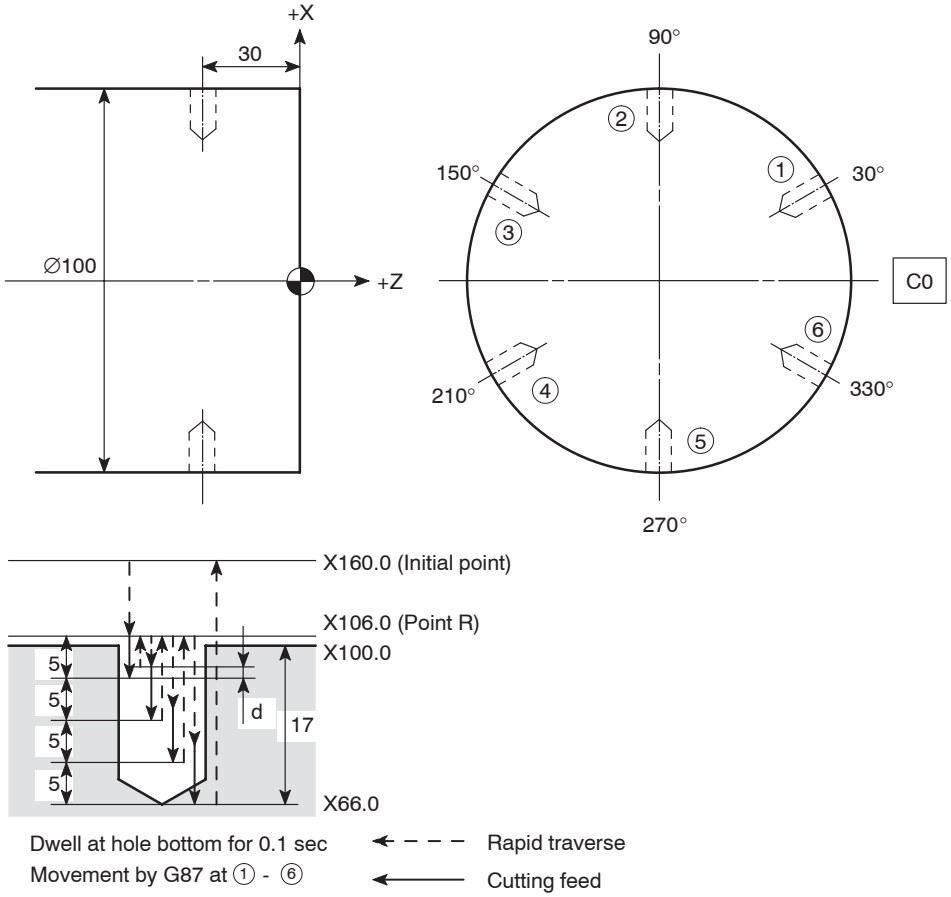

O0001;

N1;

G98; . . . . . Calling the feed per minute mode

M45; . . . . . Connecting the spindle or spindle 1 as the C-axis

G28 H0; . . . . . Returning the C-axis to the machine zero point

G00 T0101;

G97 S1000 M13; . . . . . Starting the rotary tool spindle in the normal direction at 1000 min^{-1}

X160.0 Z–30.0 C30.0; . . . . . Positioning at point ① (Z–30.0, C30.0) and initial point (X160.0) at a rapid traverse rate

G87 X66.0 R–27.0 Q5000 P100 F100;

. . . . . Executing the side deep hole drilling cycle (G87) at point ①

- X66.0 . . . . . X coordinate value of the point X (hole bottom)
- R–27.0 . . . . . Distance and direction from the initial point to the point R (in radius)
- Q5000 . . . . . Depth of cut per one infeed motion: 5 mm
- P100 . . . . . Dwell period at hole bottom for 0.1 sec

  Rotary tool spindle 1 turn time (sec)

  $$= \frac{60 \text{ (sec)}}{\text{spindle speed (min}^{-1})}$$

  $= 0.06 < 0.1$ (sec)

  thus, the rotary tool spindle rotates more than one turn.
- F100 . . . . . Feedrate of 100 mm/min

C90.0 Q5000;
C150.0 Q5000;
C210.0 Q5000; . . . . . Executing the side deep hole drilling cycle (G87) at points ② to ⑥
C270.0 Q5000;
C330.0 Q5000;

G80; . . . . . Canceling the side deep hole drilling cycle mode (G87)

G00 X200.0 Z100.0 M05; . . . . . Stopping the rotary tool spindle

M46; . . . . . Canceling the C-axis connection

G99; . . . . . Calling the feed per revolution mode

M01;

⋮

7.3 G87 Side Spot Drilling Cycle

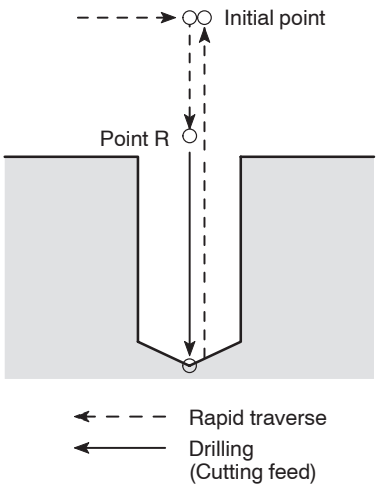

The side spot drilling cycle is a simple cycle in which drilling is carried out in the –X direction and then the cutting tool is returned at a rapid traverse rate.

The G87 side spot drilling cycle is used for machining a center hole by a centering drill or drilling of comparatively shallow hole.

COMMAND

1. Standard format (setting made before shipping the machine)

<ZC plane>

G87 Z(W)_ C(H)_ X(U)_ R_ F_ ;

<ZY plane>

G87 Z(W)_ Y(V)_ X(U)_ R_ F_ ;

2. F15 format

<ZC plane>

G19 G81 Z(W)_ C(H)_ X(U)_ R_ F_ ;

<ZY plane>

G19 G81 Z(W)_ Y(V)_ X(U)_ R_ F_ ;

- G19 . . . . . Selects the machining plane (ZC, ZY plane).

  NOTE The X-axis is used as the hole machining axis.

- G87, G81 . . . . Calls the side spot drilling cycle.
- Z, C, Y . . . . . Absolute command

  Specifies the hole machining positions.
- W, H, V . . . . . Incremental command

  Specifies the distance and direction from the end point of the previous block to the hole position.
- X . . . . . Absolute command

  Specifies the hole bottom position.
- U . . . . . Incremental command

  Specifies the distance and direction from the point R to the hole bottom (in diameter).

- R . . . . . <Standard format>

  Specifies the distance and direction from the initial point to the point R (in radius) (incremental command).

  <F15 format>

  Specifies the point R position (in diameter) (absolute command).

- F . . . . . Specifies the feedrate (mm/min).

Ex. **Programming using G87 (Side spot drilling cycle)**

To carry out the side spot drilling cycle (G87) at points ① to ⑥. (ZC plane)

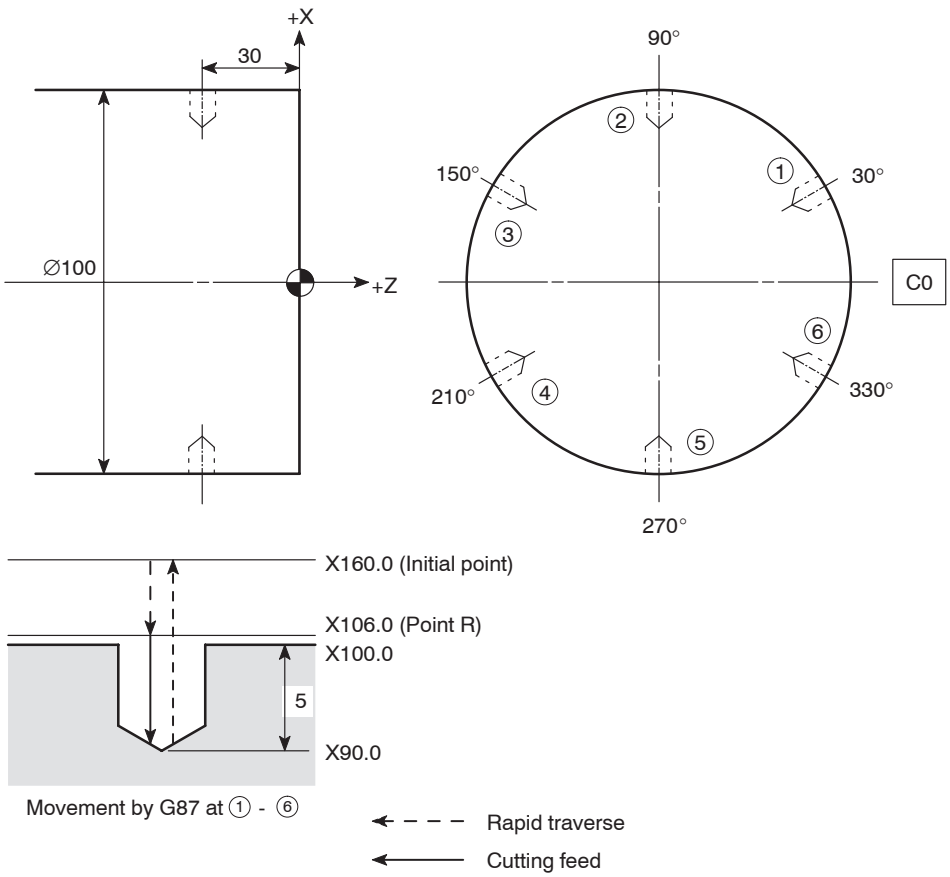

O0001;

N1;

G98; . . . . . Calling the feed per minute mode

M45; . . . . . Connecting the spindle or spindle 1 as the C-axis

G28 H0; . . . . . Returning the C-axis to the machine zero point

G00 T0101;

G97 S1000 M13; . . . . . Starting the rotary tool spindle in the normal direction at 1000 min^{-1}

X160.0 Z–30.0 C30.0; . . . . . Positioning at point ① (Z–30.0, C30.0) and initial point (X160.0) at a rapid traverse rate

G87 X90.0 R–27.0 F100; . . . . . Executing the side spot drilling cycle (G87) at point ①

- X90.0 . . . . . X coordinate value of the point X (hole bottom)
- R–27.0 . . . . . Distance and direction from the initial point to the point R (in radius)
- F100 . . . . . Feedrate of 100 mm/min

C90.0;
C150.0;
C210.0; . . . . . Executing the side spot drilling cycle (G87) at points ② to ⑥
C270.0;
C330.0;

G80; . . . . . Canceling the side spot drilling cycle mode (G87)
G00 X200.0 Z100.0 M05; . . . . . Stopping the rotary tool spindle
M46; . . . . . Canceling the C-axis connection
G99; . . . . . Calling the feed per revolution mode
M01;
⋮

7.4 G87 Side Spot Drilling Cycle (Dwell)

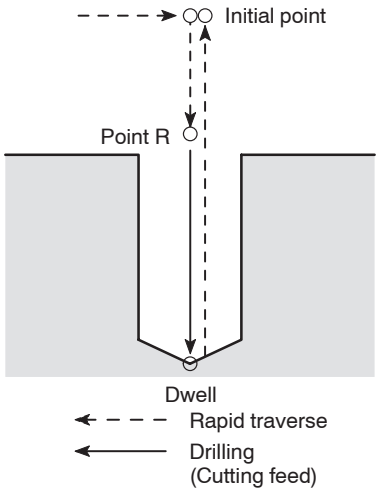

The side spot drilling cycle (dwell) carries out drilling in the –X direction and returns the tool at a rapid traverse rate.

In the G87 side spot drilling cycle (dwell), accuracy of hole depth in the blind hole machining is improved and surface roughness at the hole bottom is improved as well since dwell is carried out at the hole bottom.

The term “dwell” means suspension of axis movement for the specified period.

COMMAND

1. Standard format (setting made before shipping the machine)

<ZC plane>

G87 Z(W)_ C(H)_ X(U)_ R_ P_ F_ ;

<ZY plane>

G87 Z(W)_ Y(V)_ X(U)_ R_ P_ F_ ;

2. F15 format

<ZC plane>

G19 G82 Z(W)_ C(H)_ X(U)_ R_ P_ F_ ;

<ZY plane>

G19 G82 Z(W)_ Y(V)_ X(U)_ R_ P_ F_ ;

- G19 . . . . . Selects the machining plane (ZC, ZY plane).

  NOTE The X-axis is used as the hole machining axis.

- G87, G82 . . . . Calls the side spot drilling cycle (dwell).
- Z, C, Y . . . . . Absolute command

  Specifies the hole machining positions.
- W, H, V . . . . . Incremental command

  Specifies the distance and direction from the end point of the previous block to the hole position.
- X . . . . . Absolute command

  Specifies the hole bottom position.
- U . . . . . Incremental command

  Specifies the distance and direction from the point R to the hole bottom (in diameter).

- R . . . . . <Standard format>

  Specifies the distance and direction from the initial point to the point R (in radius) (incremental command).

  <F15 format>

  Specifies the point R position (in diameter) (absolute command).

- P . . . . . Specifies the period of dwell function executed at the hole bottom.

  P1000 → 1 sec

- F . . . . . Specifies the feedrate (mm/min).

Ex. **Programming using G87 (Side spot drilling cycle (dwell))**

To carry out the side spot drilling cycle (dwell) (G87) at points ① to ⑥. (ZC plane)

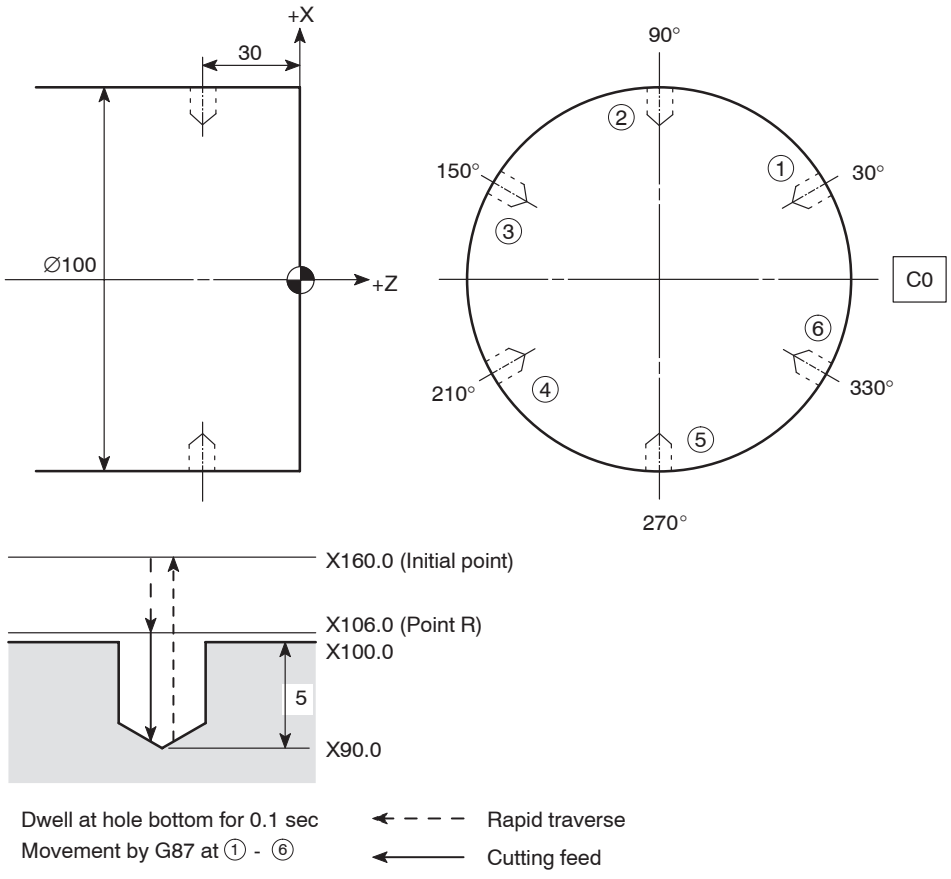

O0001;
N1;
G98; . . . . . Calling the feed per minute mode
M45; . . . . . Connecting the spindle or spindle 1 as the C-axis
G28 H0; . . . . . Returning the C-axis to the machine zero point
G00 T0101;
G97 S1000 M13; . . . . . Starting the rotary tool spindle in the normal direction at 1000 min^{-1}
X160.0 Z–30.0 C30.0; . . . . . Positioning at point ① (Z–30.0, C30.0) and initial point (X160.0) at a rapid traverse rate
G87 X90.0 R–27.0 P100 F100; . . . . . Executing the side spot drilling cycle (dwell) (G87) at point ①

- X90.0 . . . . . X coordinate value of the point X (hole bottom)
- R–27.0 . . . . . Distance and direction from the initial point to the point R (in radius)
- P100 . . . . . Dwell period at hole bottom for 0.1 sec

  Rotary tool spindle 1 turn time (sec)

  $$= \frac{60 \text{ (sec)}}{\text{spindle speed } (min^{-1})}$$

  $= 0.06 < 0.1$ (sec)

  thus, the rotary tool spindle rotates more than one turn.
- F100 . . . . . Feedrate of 100 mm/min

C90.0;
C150.0;
C210.0; . . . . . Executing the side spot drilling cycle (dwell) (G87) at points ② to ⑥
C270.0;
C330.0;

G80; . . . . . Canceling the side spot drilling cycle (dwell) mode (G87)
G00 X200.0 Z100.0 M05; . . . . . Stopping the rotary tool spindle
M46; . . . . . Canceling the C-axis connection
G99; . . . . . Calling the feed per revolution mode
M01;
⋮

8. **G88** Side Tapping Cycle

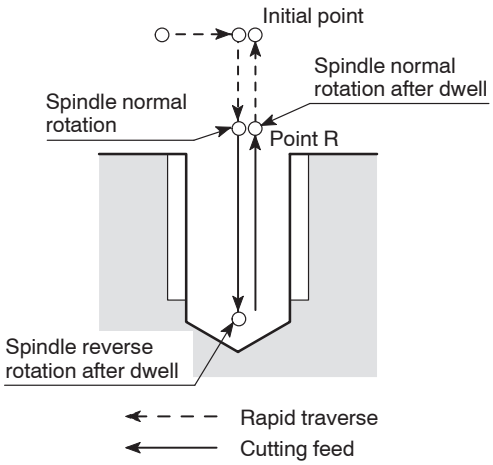

The G88 side tapping cycle is used for machining thread using a tap.

When a cutting tool rotating in the normal direction reaches the specified bottom position, the cutting tool rotating direction is reversed automatically to return to the specified level.

NOTE To use this side tapping cycle, a tapper is used.

COMMAND

1. Standard format (setting made before shipping the machine)

<ZC plane>

G88 Z(W)_ C(H)_ X(U)_ R_ P_ F_ ;

<ZY plane>

G88 Z(W)_ Y(V)_ X(U)_ R_ P_ F_ ;

2. F15 format

<ZC plane>

G19 G84 Z(W)_ C(H)_ X(U)_ R_ P_ F_ ;

<ZY plane>

G19 G84 Z(W)_ Y(V)_ X(U)_ R_ P_ F_ ;

- G19 . . . . . Selects the machining plane (ZC, ZY plane).

  NOTE The X-axis is used as the hole machining axis.

- G88, G84 . . . . Calls the side tapping cycle.
- Z, C, Y . . . . . Absolute command

  Specifies the hole machining positions.
- W, H, V . . . . . Incremental command

  Specifies the distance and direction from the end point of the previous block to the hole position.
- X . . . . . Absolute command

  Specifies the hole bottom position.
- U . . . . . Incremental command

  Specifies the distance and direction from the point R to the hole bottom (in diameter).

- R . . . . . <Standard format>

  Specifies the distance and direction from the initial point to the point R (in radius) (incremental command).

  <F15 format>

  Specifies the point R position (in diameter) (absolute command).

- P . . . . . Specifies the period of dwell function executed at the hole bottom.

  P1000 → 1 sec

- F . . . . . Specifies the feedrate (mm/min).
  (spindle speed × pitch)

CAUTION

① For the side tapping cycle called by G88, a tapper is used. In this case, the return movement from the bottom of the machined hole to the point R level is made with the tapper extended. Therefore, the point R level must be specified larger value than tapper extending length. If the smaller value is specified, the cutting tool and workpiece may collide or interfere with each other, and this could damage the machine when moving to next machining position.

② When the emergency stop button or RESET (RESET) key has been pressed to stop the machine during a tapping operation, carefully move the axes after checking the workpiece and cutting tool carefully for damage. If you move the axes without due care, the workpiece and cutting tool may collide or interfere with each other, and this could cause damage to the machine.

NOTE

① During the side tapping cycle called by G88, feedrate override and spindle speed override are fixed to 100% because a fixed lead thread cannot be cut if feedrate or spindle speed is changed during side tapping cycle.

② If the SP (SP) switch on the operation panel is pressed during side tapping cycle, side tapping cycle does not stop until the X-axis returns to the initial point level is completed.

Ex. **Programming using G88 (Side tapping cycle)**

To carry out the side tapping cycle (G88) (pitch: 2 mm, depth: 20 mm) at points ① to ⑥. (ZC plane)

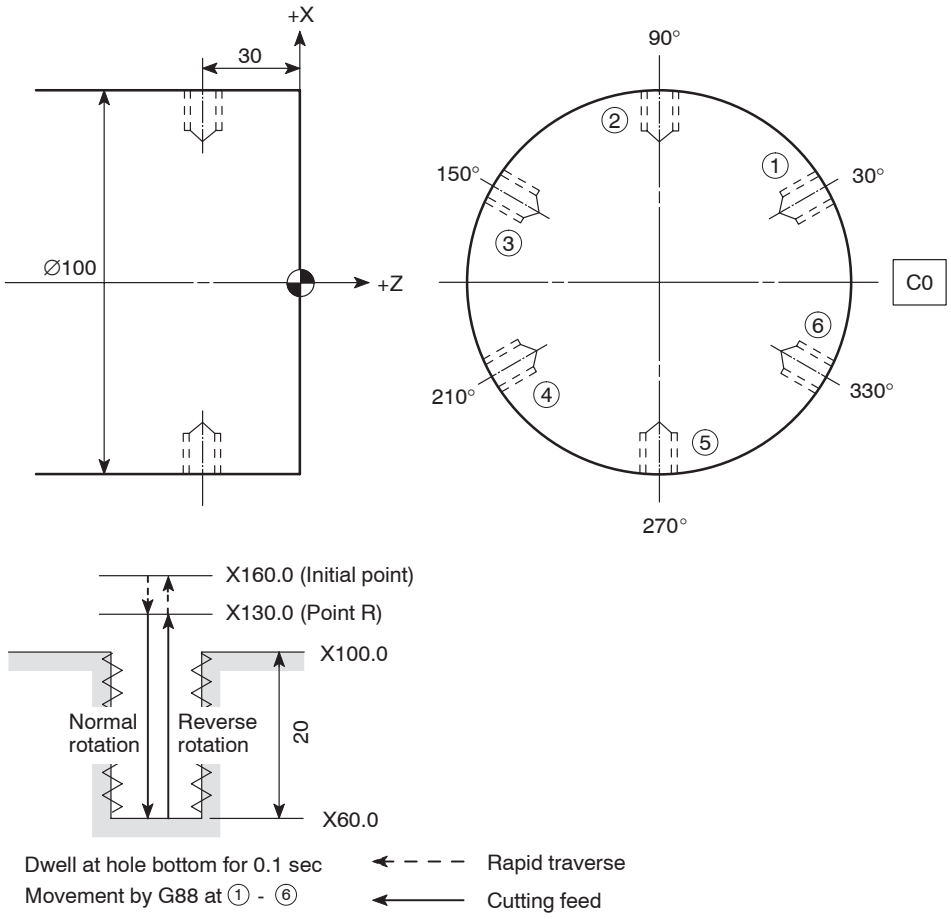

O0001;
N1;
G98; . . . . . Calling the feed per minute mode
M45; . . . . . Connecting the spindle or spindle 1 as the C-axis
G28 H0; . . . . . Returning the C-axis to the machine zero point
G00 T0101;
G97 S300 M13; . . . . . Starting the rotary tool spindle in the normal direction at 300 min^{-1}
X160.0 Z–30.0 C30.0; . . . . . Positioning at point ① (Z–30.0, C30.0) and initial point (X160.0) at a rapid traverse rate

G88 X_ R–15.0 P500 F600; . . . . . Executing the side tapping cycle (G88) at point ①
Tapping is executed up to 20 mm depth.

Feedrate F = Spindle speed (min^{-1}) × Pitch (mm)
= 300 × 2 = 600 (mm/min)

For the X-axis point, specify
"X (100 – 2 ×
(20 – tapper elongation in normal rotation + tap engaging length))".

For dwell period P, refer to page I–77.

C90.0;
C150.0;
C210.0; . . . . . Executing the side tapping cycle (G88) at
C270.0; points ② to ⑥
C330.0;

G80; . . . . . Canceling the side tapping cycle mode (G88)
G00 X200.0 Z100.0 M05; . . . . . Stopping the rotary tool spindle
M46; . . . . . Canceling the C-axis connection
G99; . . . . . Calling the feed per revolution mode
M01;
⋮

9. **M329 G88** Synchronized Side Tapping Cycle

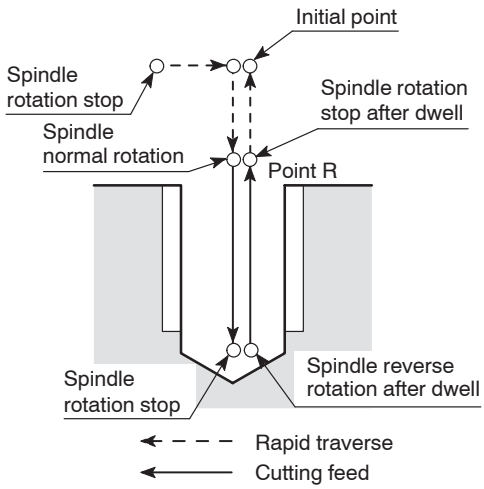

When executing the tapping operation, X- or Z-axis feed amount per rotary tool spindle rotation must be equal to the pitch of the thread to be cut.

With the synchronized side tapping cycle, accurate tapping operation is possible for cutting thread since the rotation of the rotary tool spindle rotation and the X-axis feed are constantly synchronized.

NOTE This cycle can be used only for the Y-axis specification TL series machine and the MC type SL-400 and SL-600 series machines.

COMMAND

1. Standard format (setting made before shipping the machine)

<ZC plane>

M329 S_ ;
G88 Z(W)_ C(H)_ X(U)_ R_ P_ F_ ;

<ZY plane>

M329 S_ ;
G88 Z(W)_ Y(V)_ X(U)_ R_ P_ F_ ;

2. F15 format

<ZC plane>

M329 S_ ;
G19 G84.2 Z(W)_ C(H)_ X(U)_ R_ P_ F_ ;

<ZY plane>

M329 S_ ;
G19 G84.2 Z(W)_ Y(V)_ X(U)_ R_ P_ F_ ;

- M329 . . . . . Synchronized tapping command
- S . . . . . Spindle speed (min^{-1})
- G19 . . . . . Selects the machining plane (ZC, ZY plane).

  NOTE The X-axis is used as the hole machining axis.
- G88 . . . . . Calls the side tapping cycle.
- G84.2 . . . . . Calls the synchronized tapping cycle

- Z, C, Y . . . . . Absolute command

  Specifies the hole machining positions.

- W, H, V . . . . . Incremental command

  Specifies the distance and direction from the end point of the previous block to the hole position.

- X . . . . . Absolute command

  Specifies the hole bottom position.

- U . . . . . Incremental command

  Specifies the distance and direction from the point R to the hole bottom (in diameter).

- R . . . . . <Standard format>

  Specifies the distance and direction from the initial point to the point R (in radius) (incremental command).

  <F15 format>

  Specifies the point R position (in diameter) (absolute command).

- P . . . . . Specifies the period of dwell function executed at the hole bottom.

  P1000 → 1 sec

- F . . . . . <Feed per minute mode (G98)>
  Specifies the feedrate (mm/min).
  (spindle speed × pitch)
  <Feed per revolution mode (G99)>
  Specifies the feedrate (mm/rev).
  (pitch)

CAUTION

When the emergency stop button or RESET (RESET) key has been pressed to stop the machine during a synchronized side tapping operation, carefully move the axes after checking the workpiece and cutting tool carefully for damage. If you move the axes without due care, the workpiece and cutting tool may collide or interfere with each other, and this could cause damage to the machine.

NOTE

① During the synchronized side tapping cycle, feedrate override and spindle speed override are fixed to 100% because a fixed lead thread cannot be cut if feedrate or spindle speed is changed during synchronized side tapping cycle.

② If the SP (SP) switch on the operation panel is pressed during synchronized side tapping cycle, synchronized side tapping cycle does not stop until the X-axis returns to the initial point level is completed.

③ Call the synchronized side tapping cycle in the state the rotary tool spindle is stopped.

④ Since the rotary tool spindle rotation and X-axis feed are synchronized in the synchronized side tapping mode, it is not necessary to use a tapper.

NOTE ⑤ With the SL-400, SL-600, and VL-55 series machines, specify the M39 command in a block without other commands or specify a T command to engage the rotary tool clutch before specifying “M329 S_”. If synchronized face tapping cycle is executed without specifying the M39 command or a T command, the rotary tool spindle does not rotate since the clutch is not engaged.

⑥ With the MC type VL-55 machine, there is a spindle speed limit (1000 min^{-1}) that can be used in the synchronized tapping cycle.

Ex. **Programming using M329 G88 (Synchronized side tapping cycle)**

To carry out the synchronized side tapping cycle (M329 G88) (pitch: 2 mm, depth: 20 mm) at points ① to ⑥. (ZC plane)

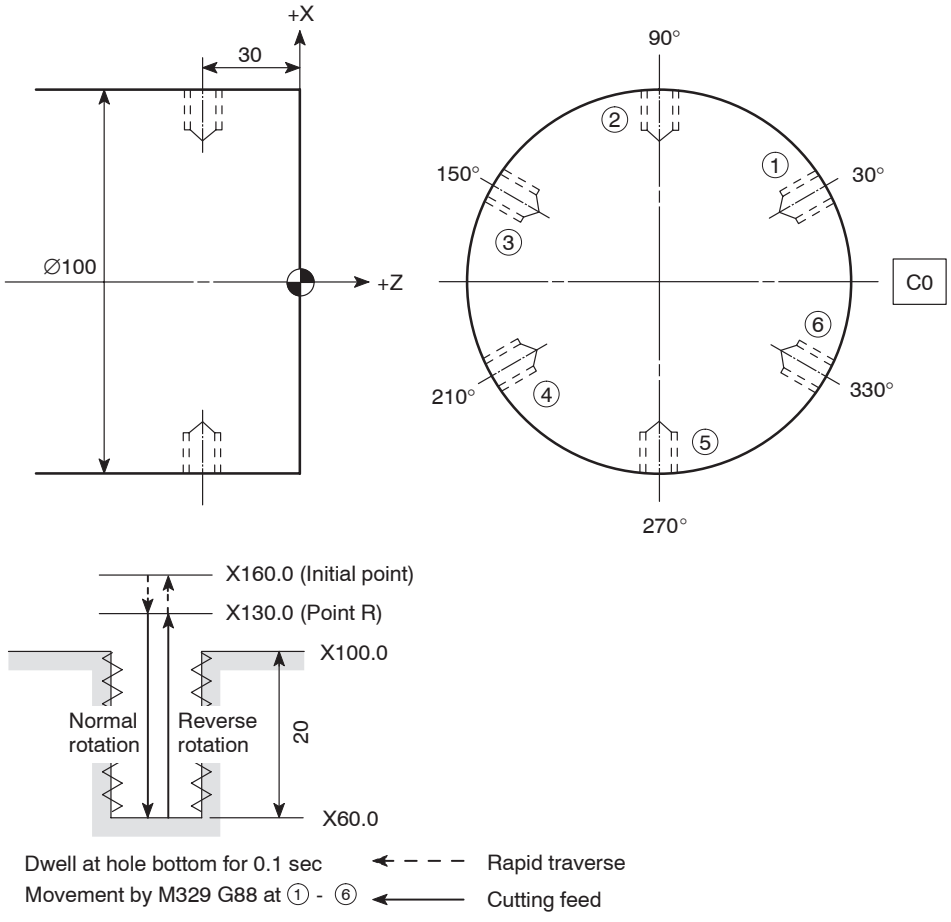


```
O0001;
N1;
G98 (G99); ..... Calling the feed per minute mode
```

NOTE The command in ( ) is for the feed per revolution mode.

```
M45; ..... Connecting the spindle as the C-axis
G28 H0; ..... Returning the C-axis to the machine zero point
```

```
G00 T0101;
G97; ..... Calling the constant spindle speed control
X160.0 Z–30.0 C30.0; ..... Positioning at point ① (Z–30.0, C30.0) and initial
                           point (X160.0) at a rapid traverse rate
```

NOTE The rotary tool spindle is stopped.

```
M329 S300; ..... Calling the synchronized tapping cycle
G88 X_ R–15.0 F600 (F2.0); ..... Executing the synchronized side tapping cycle
                                 (M329 G88) at point ①
```

① Feedrate F = Spindle speed (min^{-1}) × Pitch (mm)
= 300 × 2 = 600 (mm/min)

For the X-axis point, specify
"X (100 – 2 × (20 + tap engaging length))"

② In the movement from the initial point to the point R, the rotary tool spindle is stopped.

NOTE The command in ( ) is for the feed per revolution mode.
Feedrate F = Pitch (mm)

```
C90.0;
C150.0;
C210.0;  ..... Executing the synchronized side tapping cycle
C270.0;        (M329 G88) at points ② to ⑥
C330.0;
G80; ..... Canceling the synchronized side tapping cycle
           mode (M329 G88)
G00 X200.0 Z100.0 M05; ..... Stopping the rotary tool spindle
M46; ..... Canceling the C-axis connection
G99; ..... Calling the feed per revolution mode
```

NOTE This command is necessary only for the feed per minute mode.

```
M01;
  ⋮
```

10. **G89** Side Boring Cycle

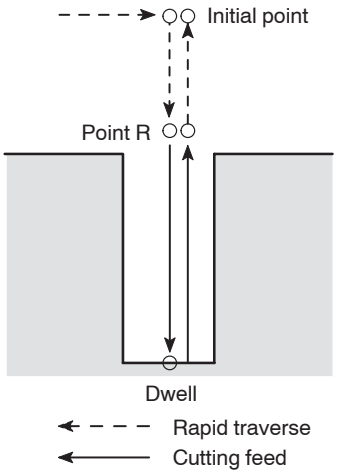

The side boring cycle carries out drilling in the –X direction and returns the tool at a cutting feedrate.

NOTE Return movement from the hole bottom to the point R is executed at the feedrate twice the specified cutting feedrate.

The G89 side boring cycle is usually used for reaming and boring operation.

COMMAND

1. Standard format (setting made before shipping the machine)

<ZC plane>

G89 Z(W)_ C(H)_ X(U)_ R_ P_ F_ ;

<ZY plane>

G89 Z(W)_ Y(V)_ X(U)_ R_ P_ F_ ;

2. F15 format

<ZC plane>

G19 G89 Z(W)_ C(H)_ X(U)_ R_ P_ F_ ;

<ZY plane>

G19 G89 Z(W)_ Y(V)_ X(U)_ R_ P_ F_ ;

- G19 . . . . . Selects the machining plane (ZC, ZY plane).

  NOTE The X-axis is used as the hole machining axis.

- G89 . . . . . Calls the side boring cycle.
- Z, C, Y . . . . . Absolute command

  Specifies the hole machining positions.
- W, H, V . . . . . Incremental command

  Specifies the distance and direction from the end point of the previous block to the hole position.
- X . . . . . Absolute command

  Specifies the hole bottom position.
- U . . . . . Incremental command

  Specifies the distance and direction from the point R to the hole bottom (in diameter).

- R . . . . . <Standard format>

  Specifies the distance and direction from the initial point to the point R (in radius) (incremental command).

  <F15 format>

  Specifies the point R position (in diameter) (absolute command).

- P . . . . . Specifies the period of dwell function executed at the hole bottom.

  P1000 → 1 sec

- F . . . . . Specifies the feedrate (mm/min).

NOTE With the F15 format, when omitting address P, specify the G85 command instead of the G89 command.

Ex. **Programming using G89 (Side boring cycle)**

To carry out the side boring cycle (G89) at points ① to ⑥. (ZC plane)

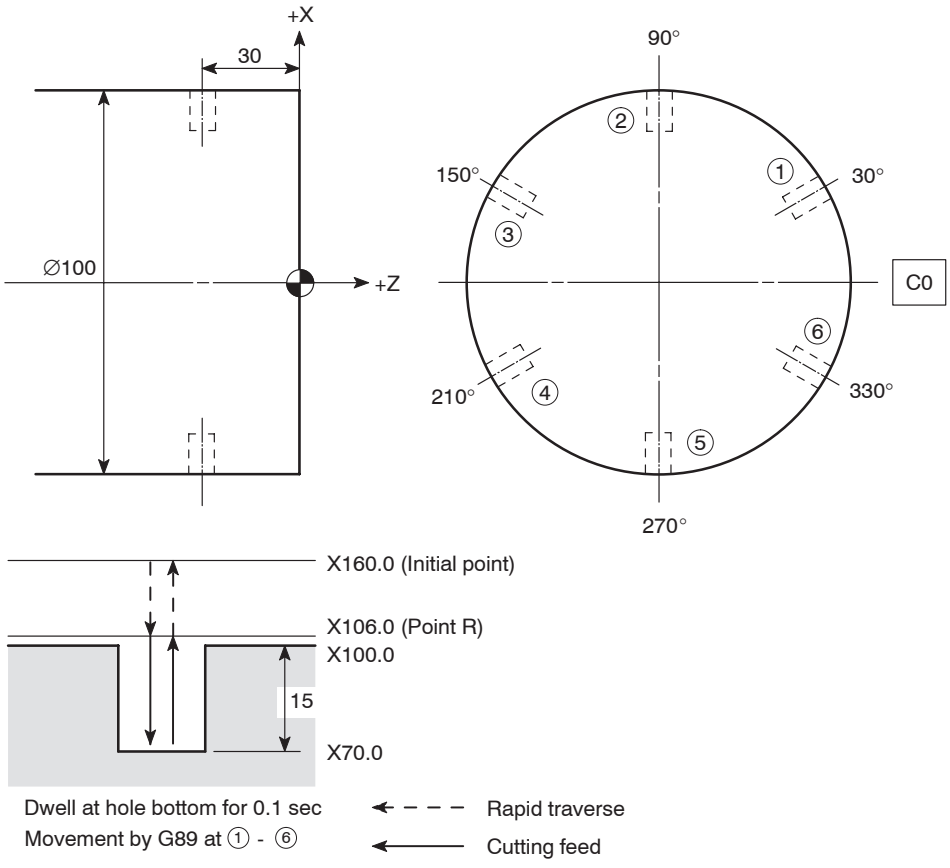

```
O0001;
N1;
G98; ..... Calling the feed per minute mode
M45; ..... Connecting the spindle or spindle 1 as the C-axis
G28 H0; ..... Returning the C-axis to the machine zero point
G00 T0101;
G97 S1000 M13; ..... Starting the rotary tool spindle in the normal
                     direction at 1000 min-1
X160.0 Z–30.0 C30.0; ..... Positioning at point ① (Z–30.0, C30.0) and initial
                           point (X160.0) at a rapid traverse rate
G89 X70.0 R–27.0 P100 F100; ..... Executing the side boring cycle (G89) at point ①
                                  ● X70.0 ..... X coordinate value of the
                                    point X (hole bottom)
                                  ● R–27.0 ..... Distance and direction from
                                    the initial point to the point R
                                    (in radius)
                                  ● P100 ..... Dwell period at hole bottom
                                    for 0.1 sec
                                    Rotary tool spindle 1 turn
                                    time (sec)
                                    = 60 (sec) / spindle speed (min-1)
                                    = 0.06 < 0.1 (sec)
                                    thus, the rotary tool
                                    spindle rotates more than
                                    one turn.
                                  ● F100 ..... Feedrate of 100 mm/min
C90.0;
C150.0;
C210.0;   ..... Executing the side boring cycle (G89) at
C270.0;         points ② to ⑥
C330.0;
G80; ..... Canceling the side boring cycle (G89)
G00 X200.0 Z100.0 M05; ..... Stopping the rotary tool spindle
M46; ..... Canceling the C-axis connection
G99; ..... Calling the feed per revolution mode
M01;
   ⋮
```

11. **G384, G380** Synchronized Tapping Cycle

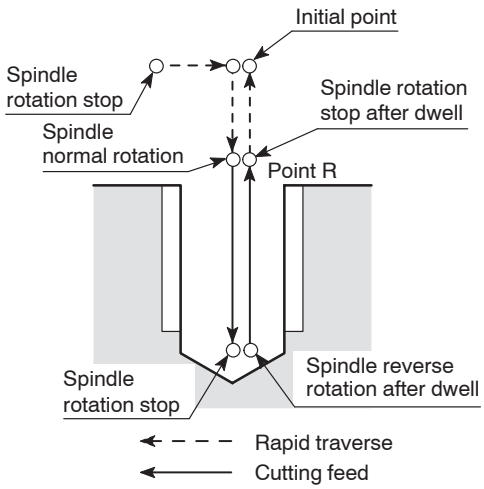

When executing the tapping operation, X- or Z-axis feed amount per rotary tool spindle rotation must be equal to the pitch of the thread to be cut.

When the G384 command is specified, accurate tapping operation is possible for cutting thread since the rotation of the rotary tool spindle and the Z-axis feed are constantly synchronized.

The synchronized tapping cycle is canceled when the G380 command is specified.

NOTE The G384 and G380 commands can be used only for the MC type or Y-axis specification SL and SL-S series (excludes SL-400, SL-600, SL-65, and SL-75 series) machines.

COMMAND

1. Synchronized face tapping cycle

<XC plane>

G384 X(U)_ C(H)_ Z(W)_
R_ F_ S_ D_ E_ M_ T2.(T3.);

<XY plane>

G384 X(U)_ Y(V)_ Z(W)_
R_ F_ S_ D_ E_ M_ T2.(T3.);
G380;

2. Synchronized side tapping cycle

<ZC plane>

G384 Z(W)_ C(H)_ X(U)_
R_ F_ S_ D_ E_ M_ T1.(T4.);

<ZY plane>

G384 Z(W)_ Y(V)_ X(U)_
R_ F_ S_ D_ E_ M_ T1.(T4.);
G380;

- G384 . . . . . Specifies the synchronized tapping cycle.
- G380 . . . . . Cancels the synchronized tapping cycle.
- X, Z, C, Y . . . . Absolute command

  <Synchronized face tapping cycle>

  X, C . . . . . Specifies the hole machining positions.

  X, Y . . . . . Specifies the hole machining positions.

  Z . . . . . Specifies the hole bottom position.

  <Synchronized side tapping cycle>

  Z, C . . . . . Specifies the hole machining positions.

  X, Y . . . . . Specifies the hole machining positions.

  X . . . . . Specifies the hole bottom position.

- U, W, H, V . . . . Incremental command

  <Synchronized face tapping cycle>

  U, H . . . . . Specifies the distance and direction from the end point of the previous block to the hole position.

  U, V . . . . . Specifies the distance and direction from the end point of the previous block to the hole position.

  W . . . . . Specifies the distance and direction from the point R to the hole bottom.

  <Synchronized side tapping cycle>

  W, H . . . . . Specifies the distance and direction from the end point of the previous block to the hole position.

  W, V . . . . . Specifies the distance and direction from the end point of the previous block to the hole position.

  U . . . . . Specifies the distance and direction from the point R to the hole bottom.

- R . . . . . Specifies the point R position (absolute command).
- F . . . . . Specifies the pitch (mm).
- S . . . . . Specifies the spindle speed for infeed (min^{-1}).
- D . . . . . Specifies the spindle speed for tool retraction (min^{-1}).
- E . . . . . Specifies the in-position check.

  E0. . . . . In-position check valid

  E1. . . . . In-position check invalid

- M . . . . . Specifies the spindle brake clamp.

  M68. . . . . Spindle or spindle 1 brake clamp

  M268. . . . . Spindle 2 brake clamp

- T . . . . . Specifies the direction of tapping.

  <SL series>

  T1. . . . . X-axis direction
  (side tapping <right thread>)

  T2. . . . . Z-axis direction
  (face tapping <right thread>)

  T3. . . . . Z-axis direction (face tapping <left thread>)

  T4. . . . . X-axis direction (side tapping <left thread>)

  <SL-S series>*1

  T1. . . . . X-axis direction
  (side tapping <right thread>)

  T2. . . . . <Spindle 1>
  Z-axis direction
  (face tapping <right thread>)
  <Spindle 2>
  Z-axis direction (face tapping <left thread>)

  T3. . . . . <Spindle 1>
  Z-axis direction (face tapping <left thread>)
  <Spindle 2>
  Z-axis direction
  (face tapping <right thread>)

  T4. . . . . X-axis direction (side tapping <left thread>)

  <SL-S series>*2

  T1. . . . . X-axis direction
  (side tapping <left thread>)

  T2. . . . . <Spindle 1>
  Z-axis direction
  (face tapping <left thread>)
  <Spindle 2>
  Z-axis direction
  (face tapping <right thread>)

  T3. . . . . <Spindle 1>
  Z-axis direction
  (face tapping <right thread>)
  <Spindle 2>
  Z-axis direction
  (face tapping <left thread>)

  T4. . . . . X-axis direction
  (side tapping <right thread>)

  NOTE
  *1: If direction of rotation is registered as “X” or “Z” on the ROTARY TOOL screen.
  *2: If direction of rotation is registered as “X↶” or “Z↶” on the ROTARY TOOL screen.

CAUTION

When the emergency stop button or RESET (RESET) key has been pressed to stop the machine during a synchronized tapping operation, carefully move the axes after checking the workpiece and cutting tool carefully for damage. If you move the axes without due care, the workpiece and cutting tool may collide or interfere with each other, and this could damage the machine.

NOTE

① During synchronized tapping cycle, feedrate override and spindle speed override are fixed to 100% because a fixed lead thread cannot be cut if feedrate or spindle speed is changed during synchronized tapping cycle.

② The dry run function is invalid during the execution of a synchronized tapping cycle.

③ To specify a synchronized tapping cycle, it is necessary to stop the rotary tool spindle.

④ Since the rotary tool spindle rotation and X- or Z-axis feed are synchronized in the synchronized tapping mode, it is not necessary use a tapper.

⑤ The G384 command must be specified in all blocks that call for a synchronized tapping cycle. The synchronized tapping cycle is not executed unless the G384 command is specified. In the second and subsequent synchronized tapping cycle call blocks, specify only the positions where the cycle is executed. These blocks must not include addresses R, F, S, D, E, M, and T.

⑥ When specifying the synchronized tapping cycle, it is not allowed to specify the number of repetition times.

⑦ After the execution of a synchronized tapping cycle by specifying the G384 command, cancel the synchronized tapping cycle by specifying the G380 command. If a hole machining canned cycle other than the synchronized tapping cycle is specified without canceling the synchronized tapping cycle by specifying the G380 command, an alarm message (3041) is displayed on the screen. It is not allowed to index the turret by a T command during the execution of a synchronized tapping cycle.

⑧ If the hole bottom position is specified using an incremental command, the following value must be specified.

With an R command . . . . . Distance and direction from the point R to the hole bottom

Without an R command . . . . . Distance and direction from the initial point to the hole bottom

⑨ If address D is not specified, the spindle speed specified by address S which is applied for infeed operation is also applied to the tool retraction movement.

⑩ If address E is not specified, in-position check becomes valid during the execution of a synchronized tapping cycle.

⑪ If the M68. or M268. command is not specified, spindle brake clamp operation is not executed.

⑫ Use the data with a decimal point for all addresses specified in the G384 block.

NOTE ⑬ Alarms related to the synchronized tapping cycle are indicated below.

Alarm No.	Message	Description
3041	CYCLE NOT FINISH	After specifying G384, other type of synchronized tapping cycle is specified without specifying G380.
3042	ILLEGAL COMMAND	There is an error in arguments. Check the arguments specified in the G384 block.
3043	TOO MANY ADDRESS	In the designation of synchronized tapping cycle positions, both absolute and incremental address characters are specified for the same axis.

Ex. **Programming using G384 and G380**

To carry out the synchronized tapping cycle (G384) (pitch: 2 mm, depth: 20 mm) at points ① to ⑥. (XC plane)

Length of engaging length: 5 mm

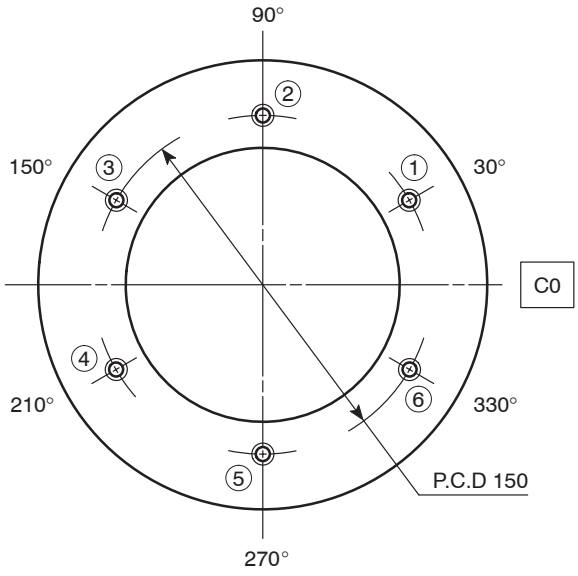

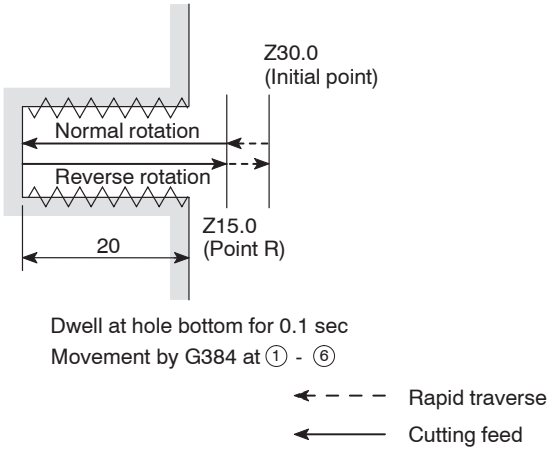


```
O0001;
N1;
G98; ..... Calling the feed per minute mode
M45; ..... Connecting the spindle or spindle 1 as the C-axis
G28 H0; ..... Returning the C-axis to the machine zero point
G00 T0101;
G97; ..... Calling the constant spindle speed control
X150.0 Z30.0 C30.0; ..... Positioning at point ① (X150.0, C30.0) and initial
                          point (Z30.0) at a rapid traverse rate
```

NOTE The rotary tool spindle is stopped.

G384 Z–25.0 R15.0 F2.0 S300. D600. (E0.) M68. T2.;

. . . . . Executing the synchronized tapping cycle (G384) at point ①

- Z–25.0 . . . . . Z coordinate value of the point Z (hole bottom)

  Z = – (depth of tap + tap engaging length)
  = – (20 + 5)
  = – 25 mm
- R15.0 . . . . . Position of R point
- F2.0 . . . . . Pitch: 2 mm
- S300. . . . . Spindle speed for infeed: 300 min^{-1}
- D600. . . . . Spindle speed for tool retraction: 600min^{-1}
- (E0.) . . . . . In-position check valid
- M68. . . . . Spindle or spindle 1 brake clamp
- T2. . . . . Direction of tapping

In the movement from the initial point to the point R, the rotary tool spindle is stopped.

G384 C90.0;
G384 C150.0;
G384 C210.0;
G384 C270.0;
G384 C330.0;

. . . . . Executing the synchronized tapping cycle (G384) at points ② to ⑥

G380; . . . . . Canceling the synchronized tapping cycle (G384)

G00 X200.0 Z100.0 M05; . . . . . Stopping the rotary tool spindle

M46; . . . . . Canceling the C-axis connection

G99; . . . . . Calling the feed per revolution mode

M01;

⋮

12. Cautions on Programming Using G84 and G88

12.1 Dwell Command

The following explains in what situation the dwell command should be used in the G84 face tapping cycle and the G88 side tapping cycle.

Dwell	To Be Specified	Not Required
Tap hole shape	Blind hole 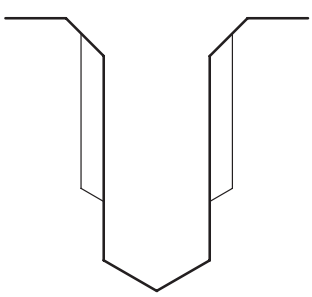	Through hole 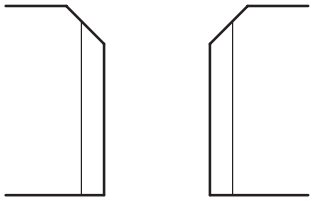
Tapper	Built-in depth sizing device	No special restriction
Tapper extension amount	Tapper is pulled into the hole from the feed stop point of Z- or X-axis by the amount of tapper extension. When the tapper is extended by the set amount, the depth sizing device built in the tapper functions and rotation is not transmitted to the tap, then tapping of specified depth is carried out.	Tapper is extended from the feed stop point of Z- or X-axis. Tapper has allowance to extend 20 to 30 mm. But, actual extension amount cannot be judged.

12.2 Precautions on Using the Tapper

When carrying out tapping in a through hole, extension of tapper tip at the hole bottom can be ignored. However, in the case of a blind hole, if the tapper should extend beyond the depth of the prepared hole, it will cause the tap to be damaged.

To avoid such a problem, use the tapper with built-in depth sizing device for tapping a blind hole.

The following distances of F_1, F_2, and F_3 are specified in the catalog of the tapper with built-in depth sizing device.

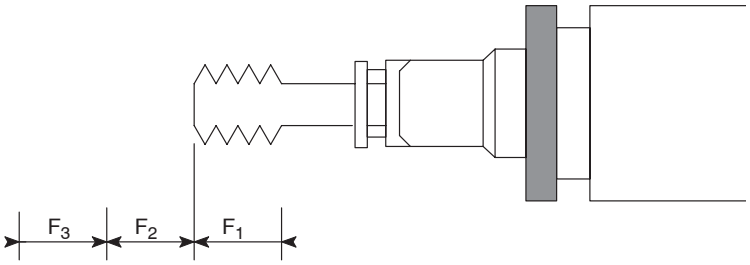

F_1	Contraction	Necessary if the tap fails to be engaged with the workpiece positively at the start of tapping.
F_2	Extension amount	Extension amount at the hole bottom. This is an extension amount of a tapper in normal spindle rotation.
F_3	Extension amount when the tap is pulled out.	This is the extension amount when the tapper leaves the workpiece while the spindle is rotating in the reverse direction.

12.3 To Finish Tapping at Correct Depth in Blind Hole

When machining a threaded hole with the tapper equipped with depth sizing device, obtain the point R and the point of the hole bottom to be specified in a program as indicated below:

NOTE The explanation given below shows the theoretical value. The depth of tapped hole will vary depending on workpiece material and prepared hole diameter in actual operation.

– Position of point R

	Standard format	F15 format
G84	R > F_2 + F_3 – “initial point”	R > F_2 + F_3
G88	R > F_2 + F_3 – (“initial point” – “machining diameter”) / 2	R > “Machining diameter” + 2 (F_2 + F_3)

– Hole bottom position

	Standard format, F15 format
G84	Z = – (“Depth of tap specified in the drawing” – F_2 + “tap engaging length”)
G88	X = “Machining diameter” – 2 (“depth of tap specified in the drawing” – F_2 + “tap engaging length”)

F_2: Extension amount at normal rotation

F_3: Extension amount at reverse rotation

Ex.

To carry out tapping of M8 P = 1.25, and 20 mm deep threaded hole in the face tapping cycle (G84).

Prepared hole: 6.8 mm dia., depth 30 mm
Tapper to be used: F_2 (extension amount at normal rotation) = 5 mm,
F_3 (extension amount at reverse rotation) = 7 mm

Length of engaging length: 5 mm

⋮

G97 S300 M13; . . . . . Starting the rotary tool spindle in the normal direction at 300 min^{-1}

Z30.0; . . . . . Positioning at initial point (Z30.0) at a rapid traverse rate

G84 X_ C_ Z–20.0 R–15.0 P800 F375; . . . . . Executing the face tapping cycle (G84)

- Z–20.0 . . . . . Z = – (“Depth of tap” – F_2 + “tap engaging length”)
  = – (20 – 5 + 5) = –20 (mm)
- R15.0 . . . . . R > $F_2 + F_3$ – “initial point”
  $F_2 + F_3$ – “initial point”
  = 5 + 7 – 30 = –18 (mm)

  Because the value to be set for the point R must be larger than –18 mm, R–15.0 is specified.
- F375 . . . . . F = Spindle speed (min^{-1}) × pitch (mm)
  = 300 × 1.25
  = 375 (mm/min)
- P800 . . . . . $\text{Dwell} = \dfrac{60\ (\text{sec}) \times F_2}{F\ (\text{mm/min})}$
  $= \dfrac{60 \times 5}{375}$
  = 0.8 (sec)

Executing the dwell to allow the tapper to extend F_2 (extension amount in normal rotation) set by the depth sizing device.

⋮

CHAPTER J
TOOL LIFE MANAGEMENT B FUNCTION (OPTION)

This chapter describes the tool life management B function. The tool life management B function automatically selects an available tool in a registered tool group if the tool called in the same group has been used to the preset life.

Standard for MSC-500 and MSC-501.

CONTENTS

J : TOOL LIFE MANAGEMENT B FUNCTION (OPTION)

1. General J–1

2. Setting the Tool Life Data J–2
   - 2.1 Setting the Tool Life Data by Manual Operation J–2
     - 2.1.1 Tool Life Management Screen J–2
     - 2.1.2 Tool Detail Screen J–5
   - 2.2 Setting the Tool Life Data in Program J–8
   - 2.3 Registering the Data Using External I/O Device] (F-25D, F-30, F-200D) J–9

3. Specification in Machining Program J–12
   - 3.1 T Command J–12
   - 3.2 Group Command J–12
   - 3.3 Life Count M Code J–12

4. Counting the Tool Life J–13

5. Skip Command J–14

6. State Flag Clear Command J–14

7. New Tool Selection Flag and Tool Life Expired Flag J–15
   - 7.1 New Tool Selection Flag J–15
   - 7.2 Tool Life Expired Flag J–15

8. Reading the Tool Life Management Information J–16

9. Reading the PMC Address J–18

10. Alarm Table J–20

11. Parameters J–21

1. General

If a tool, registered as a group tool, has been used to the preset life (life-expiration status), the function selects a spare tool in the same group.

NOTE Standard for MSC-500 and MSC-501.

The tool usable life (tool life data) and the registration number of tools are shown below.

<The tool usable life (tool life data)>

Item	Number of machined workpieces (tool use count)	Length of tool use time (tool used time)
Unit	Times	Minutes
Setting range	1 - 99999 times	1 - 99999 minutes

<The registration number of tools>

NC unit	MSC-501, MSC-518, MSG-501 MSD-501, MSD-518, MSD-501II, MSD-518II	MSC-500
Number of tools in a group	10 tools	10 tools
Number of groups	64 groups (Max.)	12 groups (Max.)

NOTE
① Although the number of registration groups can be changed in the range of the maximum number of groups, it is necessary to clear the tool life data after changing the number of registration groups.

② Tape storage length is not influenced even when the number of registration groups is changed.

2. Setting the Tool Life Data

This section describes the method of setting the tool life data.

2.1 Setting the Tool Life Data by Manual Operation

The tool life data can be set manually using the TOOL LIFE MANAGEMENT screen, TOOL DETAIL screen, etc. given below.

2.1.1 Tool Life Management Screen

[TOOL LIFE MANAGEMENT] PAGE : 01/08

GROUP	TYPE	SET	CURRENT	SEL-T	REST
01	TIMES	00300	00047	T0101	03
02	TIMES	00150	00053	T0606	01
03	MINUTE	00120	00060	T0707	10
04	MINUTE	00300	00060	T0404	05
05	TIMES	00120	00015	T1111	03
06	MINUTE	00100	00025	T0808	**
07	MINUTE	00150	00050	T0303	04
08	TIMES	00200	00100	T1212	04

For the procedure used for displaying the TOOL LIFE MANAGEMENT screen, refer to the OPERATION MANUAL separately provided.

<Contents of display>

On the tool life management screen, the information related with the tool life management function is displayed for the registered tool groups. In one page of the tool life management function screen, the following information is displayed for eight groups: GROUP/TYPE/SET/CURRENT/SEL-T/REST.

The display items are briefly explained below.

Item	Contents
GROUP	Display of tool group number MSC-500 . . . . . 1 - 12 MSC-501, 518, MSG-501, ... 1 - 64 MSD-501, 518, 501II, 518II . . . . . 1 - 64
TYPE	Display of the selected tool life counting condition for the individual groups (UNDEC., TIMES, MINUTE)
SET	Display of the initial setting of tool life data
CURRENT	Display of the present counted tool life data
SEL-T	Display of the tool number of the tool presently used (“IN USE” status) in each group, or the tool number of the tool to be called by the next T command
REST	Display of the number of available tools in each group, excepting the tool assigned as “IN USE”. If “∗∗” is displayed in this column, it indicates that all tools in that group have been used to the life.

<Key operation>

① Cursor control keys

The cursor control keys [→] [←] [↑] [↓] are used to move the cursor. The cursor can be moved to the data field of SET and CURRENT items for all displayed tool groups.

② Page selection keys

The PAGE selection keys [PAGE▼] and [PAGE▲] are used to change the display page (range of display tool groups).

The present page and the total number of pages are displayed at the upper right area of the screen.

③ Soft-keys

The function of the soft-keys are explained below.

Soft-keys	Functions
[EXIT]	When the **[EXIT]** soft-key is pressed, the screen returns to the PCMDI MENU screen.
[G. SRCH]	When the **[G. SRCH]** soft-key is pressed after inputting the group number to be searched, the cursor moves to the specified group.
[DETAIL]	When the **[DETAIL]** soft-key is pressed, the TOOL DETAIL screen of the present cursor located group is displayed. For details of the TOOL DETAIL screen, refer to page J–5 (2.1.2).
[TYPE]	To change the tool life counting conditions of the selected group, press the **[TYPE]** soft-key. It is not allowed to change the tool life counting condition while the machine is operating by the pressing the automatic operation switch (cycle start). For details of the tool life counting condition change procedure, refer to <Changing tool life counting conditions> below.
[SKIP]	To skip the “IN USE” tool, press the **[SKIP]** soft-key. The “IN USE” tool in the cursor located group is skipped. For the group in which no “IN USE” tool exists,processing is not executed.
[I/O]	When the **[I/O]** soft-key is pressed, the LIFE MANAGEMENT DATA I/O screen is displayed. When the NC unit is an MSC-500, as the input/output function of tool life management data is not provided, the **[I/O]** soft-key is not displayed. For details of the LIFE MANAGEMENT DATA I/O screen, refer to page J–9 (2.3).

<Inputting and outputting the data>

It is possible to input and output the set tool life data and the present counted tool life data.

1) Move the cursor to the data field of SET or CURRENT item using the cursor control keys.

2) Input the data by data entry keys.

① Data input range is from 0 to 99999.

② It is not allowed to input the set tool life data or the present counted life data while the machine is operating by the pressing the automatic operation switch (cycle start).

③ Data cannot be input for SEL-T and REST.

3) Press the (INPUT) key.

<Changing the tool life counting condition>

1) Move the cursor to the data field of TYPE item of the group for which the tool life counting condition is required to be changed.
2) Press the **[TYPE]** soft-key.

   The soft-key display is changed and the message “IF CHANGING THE [TYPE], DATA IS CLEARED.” is displayed.
3) Press the soft-key (**[UNDEC.]**, **[TIMES]**, **[MINUTE]**) corresponding to the required tool life counting condition.

   The other data (SET, CURRENT, tool numbers of registered tools) of that group is initialized.
4) Press the **[CANCEL]** soft-key.

   The screen is returned to the previous screen.

If the life condition is changed, the screen returns to the previous screen automatically.

2.1.2 Tool Detail Screen

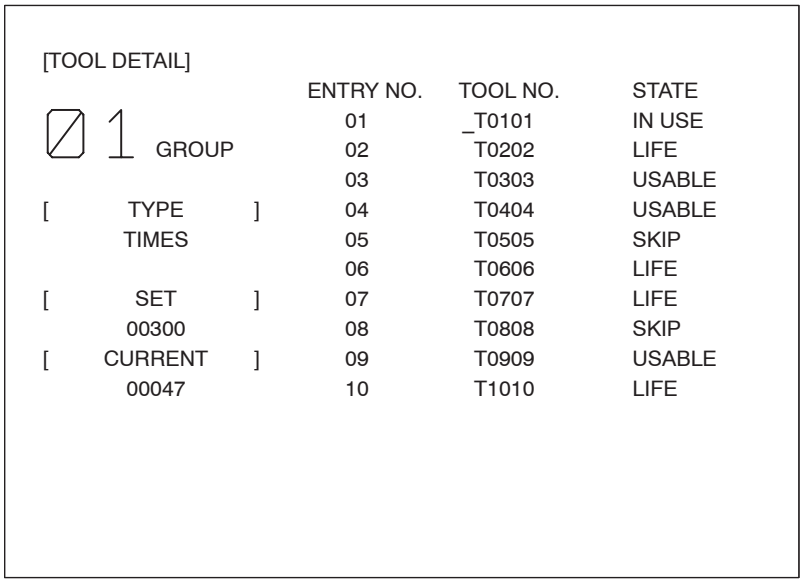

For the procedure used for displaying the TOOL DETAIL screen, refer to the OPERATION MANUAL separately provided.

<Contents of display>

On the TOOL DETAIL screen, tool numbers of the tools registered to each group are displayed along with the present status of these tools. “TYPE”, “SET” and “CURRENT” are also displayed.

<Key operation>

① Cursor control keys

The cursor control keys [↑] and [↓] are used to move the cursor. The cursor can be moved only vertically and the cursor cannot be moved horizontally.

② Page selection keys

The display page (tool group) is changed by pressing the PAGE selection keys [PAGE↓] and [PAGE↑] .

③ Soft-keys

The functions of soft-keys are explained below.

Soft-keys	Functions
[RETURN]	When the **[RETURN]** soft-key is pressed, the screen returns to the TOOL LIFE MANAGEMENT screen.
[G. SRCH]	When the **[G. SRCH]** soft-key is pressed after inputting the group number to be searched, the cursor moves to the specified group.
[STATE]	To change the state of a registered tool, press the **[STATE]** soft-key. The state can be changed while the machine is operating by pressing the automatic operation switch [⟲] (cycle start). For details of state changing procedure, refer to <Changing the tool state> below.
[G. RSET]	When the **[G. RSET]** soft-key is pressed, the state of the tools registered to the displayed tool group is all cleared to “USABLE” state. NOTE The tool state cannot be cleared while the machine is operating by pressing the automatic operation switch [⟲] (cycle start).

<Inputting the data>

It is possible to input the tool number (TOOL NO.).

1) Move the cursor to the tool number which should be changed using the cursor control keys.
2) Input the data by data entry keys.

NOTE
① Data input range is “0 - 9999”.
② It is not allowed to input a tool number while the machine is operating by pressing the automatic operation switch (cycle start).
③ When a tool number other than “0” is input, the tool state is changed to “USABLE”.
④ If “0” is input, it is changed to “————”.

3) Press the (INPUT) key.

<Changing the tool state>

1) Move the cursor to the tool state which should be changed using the cursor control keys.
2) Press the **[STATE]** soft-key. The-soft key display changes.
3) Press the soft-key of the required tool state (**[USABLE]**, **[LIFE]**).

   The state of the cursor specified tool state is changed to the selected state.
4) Press the **[CANCEL]** soft-key.

   The screen returns to the previously displayed screen.

When the state is changed, the screen automatically returns to the previous screen.

NOTE
① When changing the state, it is allowed to change the state only to “USABLE” or “LIFE”. For the tool for which the state is “IN USE”, it is not allowed to change the state.
② For the tool group in which all tools have been used to the set life, it is not allowed to change the state. To restore the operation after changing the tools, press the **[G. RSET]** soft-key to initialize the tool data.

2.2 Setting the Tool Life Data in Program

For each tool group, it is possible to register the tools and the tool life data in a program by using the format indicated below.

G334 F_.;
A_. B_. C_.;
T_.;
G335;

- G334 . . . . . Registration mode ON (modal G code)
- G335 . . . . . Registration mode OFF (modal cancel)
- F. . . . . Selects initialization mode at tool registration.
  - F0. . . . At registration, initialization is made for none of groups.
  - F1. . . . At registration, initialization is made for all groups.
- A. . . . . Specifies a tool group number.
  - Range: 1 - number of used groups
- B. . . . . Specifies tool life counting condition.
  - B1. . . . Time
  - B2. . . . Minutes
- C. . . . . Specifies initial data.
  - Range: 1 - 99999
- T. . . . . Specifies registration tool number.

Setting the tool life data

O0001;
G334 F1.; . . . . . Turning on the tool life data registration mode
A1. B1. C100.; . . . . . Group number “1”, tool life counting by “times”, and set tool life is “100”.
T101.;
T202.;
T303.;
A2. B2. C300.; . . . . . Group number “2”, tool life counting by “minutes”, and set tool life is “300”.
T404.;
T505.;
G335; . . . . . Turning off the tool life data registration mode
M30;

<Operation>

1) Store the program into memory.
2) Press the automatic operation switch (cycle start) in the memory (MEM) mode. The data in the program is stored in the tool life management area of the memory.

NOTE
① In the setting data, the same tool number may appear repeatedly whether in the same group or in different groups. Combination of upper two digits and lower two digits of a tool number may be selected as required.

② Up to 10 tools can be registered. The registered tools are selected in the order they are specified in the program.

2.3 Registering the Data Using External I/O Device (F-25D, F-30, F-200D)

It is possible to input or output the tool life management data using the RS-232-C interface at the LIFE MANAGEMENT DATA I/O screen.

NOTE
When the NC unit is an MSC-500, the input/output function of tool life management data is not provided.

<Precautions relating to data input/output>

① This function inputs/outputs the macro variables where the tool life management information is set.

② The input/output data is “TYPE”, “SET”, and “TOOL NO.” of the registered tool groups.

③ When the data is input, the “CURRENT” and “STATE” data are initialized.

④ When the data is input, the present registered data is initialized.

⑤ The operation is carried out only in the EDIT mode.

<LIFE MANAGEMENT DATA I/O screen>

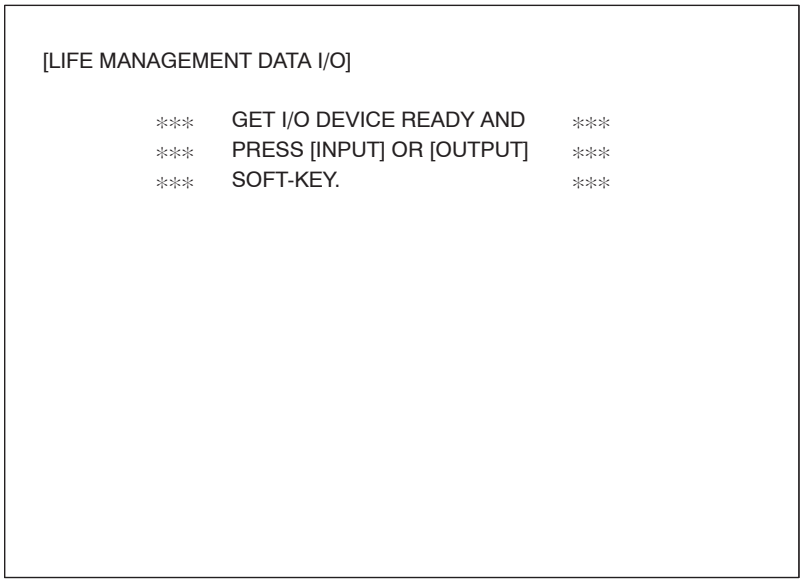

<Operation procedure>

1) Select the EDIT mode using the mode selection switch.
2) Connect the external I/O device through the RS-232-C interface and set it ready.

NOTE If input process is attempted while an external I/O device is not ready, the NC enters the waiting state. If this occurs, the alarm state must be exited by either turning off the NC power or disconnecting the communication cable.

3) Press the **[INPUT]** or **[OUTPUT]** soft-key.

   The message “INPUTTING” or “OUTPUTTING” is displayed in the center of the screen.

   The process is completed when the message “INPUTTING” or “OUTPUTTING” is disappeared.

NOTE While the data is being input or output, it is not allowed to change the screen or interrupt the input/output process.

4) Press the **[RETURN]** soft-key.

   The screen returns to the TOOL LIFE MANAGEMENT screen.

<Communication conditions>

Channel	1 (punch panel)
Baudrate	4800
Stop bit	2 bits
Parity	None
Output code	ISO

<Alarm>

If an error occurs during data communication, the message “COMMUNICATION ERROR” and error number are displayed. Check the cause of communication error, referring to the following table.

No.	Contents
00001	The line is not opened.
00002	The line is abnormal. (DSR signal is OFF.)
00003	The line is abnormal. (overrun)
00004	The line is abnormal. (receive buffer overflow)
00005	The line is abnormal. (framing error, parity error)
00006	No line option is supported.
00007	The line is busy.
00009	Data format is wrong.
00115	Undefined variable number is specified.
00255	No receive data.

<Data output format>

Macro variables are output in the following format.

Ex.

```
%
N11000P                1.000    ←  [Group 1, type]
P        300.000                ←  [Group 1, set data]
P        101.000                ←  [Group 1, registered tool number 1]
P        202.000                ←  [Group 1, registered tool number 2]
        ⋮
P       1010.000                ←  [Group 1, registered tool number 10]
N11040P                2.000    ←  [Group 2, type]
P        200.000                ←  [Group 2, set data]
P       1101.000                ←  [Group 2, registered tool number 1]
        ⋮
(to the final group)
%
```

NOTE The first variable number of No. 1 group is “#11000”, and for the following groups, the first variable number is incremented by “40” for each group. Pay attention to change the registered tool using the external I/O device.

Example: No. 2 group #11040

No. 3 group #11080

3. Specification in Machining Program

This section describes the method of specifying the tool life management B function in the machine program.

3.1 T Command

When the T command is specified as a tool selection T code, the tool life management function is not executed. In this case, specify the T command as the ordinary command of tool number and tool offset number.

T_ ;

3.2 Group Command

In response to the tool group number, the function calls a registered tool in the specified group and manages its life.

In a tool group, tools are called in the order they were registered.

G336 T_.;

- T. . . . . Specifies a group number

  Range: 1 - Number of used groups
  (only registered groups)

3.3 Life Count M Code

When the M300 command is specified, tool life is counted.

M300;

The M300 command must be specified in a block without other commands.

For details, refer to page J–13 (4.).

4. Counting the Tool Life

<When tool life is set in “time”>

① The counter of the tool group is incremented by “1” for the tool groups called in a program from the cycle start to the execution of M300. If the same tool group is specified repeatedly until the execution of M300, counter data is incremented “1” independent of the number of called times.

② If the NC enters the reset state before the execution of M300, the counter of the tool groups used from the cycle start to the reset state of the process program is incremented “1”. The counter is incremented when the tool group is called; the function ignores whether or not the called tool is used for cutting.

③ The maximum setting value for “SET” is “99999 times”.

<When tool life is set in “minute”>

① For the counter of the tool groups which are called in a program from the cycle start to the execution of M300, the time used in the cutting mode is added. If the same tool group is specified repeatedly until the execution of M300, total cutting time is added to the counter of the called tool group.

② Although setting and display are given in units of “minutes”, actual counting is made in units of “seconds”.

③ Even if a tool is called, the time spent for single block stop, feed hold, rapid traverse, dwell and waiting for operation completion is ignored.

④ If the operation is suspended due to axis interlock during the execution of cutting blocks, such time is added.

⑤ If the NC enters the reset state before the execution of M300, the cutting time of the individual tool groups used from the cycle start to the reset state of the process program is added to the individual counters.

⑥ The maximum setting value for “SET” is “99999 minutes”.

5. Skip Command

The skip command skips the tool, assigned the “IN USE” state, in the specified tool group. If there is no “IN USE” state tool in the specified tool group, the skip processing is not executed.

The “IN USE” tool refers to the tool which was called at least once and it has not been used to the life.

G337 T_.;

- T. . . . . Specifies a tool group number.

  Range: 1 - Number of used groups

6. State Flag Clear Command

The state flag clear command clears the STATE flag of the specified tool group. This command does not clear the TYPE and SET data and the registered tool numbers.

G338 T_.;

- T. . . . . Specifies a tool group number.

  Range: 1 - Number of used groups

7. New Tool Selection Flag and Tool Life Expired Flag

This section describes the new tool selection flag and tool life expired flag.

7.1 New Tool Selection Flag

① If a new tool is selected in the specified tool group, the new tool selection flag is set (“1” is set) at the same time the tool group command is executed.

② This flag can be used to execute the automatic measuring of the offset data of the newly called tool, for example.

③ The new tool selection flag remains valid until the next group command (G336) or tool use data count M code (M300) is specified, or until the NC is reset.

④ The new tool selection flag is output to the common variable of custom macro (option). The variable number where the flag is output is set for PC parameter “D602”.

NOTE If the new tool selection flag is not used or when the optional custom macro is not supported, setting for D602 should be “D602 = 0”.

7.2 Tool Life Expired Flag

① If all tools in the specified tool group have been used to the life, the tool life expired flag is set (“1” is set).

NOTE The tool life expired flag cannot be reset to “0” unless the tool life expired state of all the tools in that group is cleared either by program or by an operation at the screen.

② The tool life expired flag is output to the common variable of custom macro (option). The variable number where the flag is output is set for PC parameter “D604”.

NOTE If the tool life expiration flag is not used or when the optional custom macro is not supported, setting for D604 should be “D604 = 0”.

③ The tool life expired flag is output to PMC, too. The PMC executes the following processing when it receives the tool life expired flag.

- Displays the message, indicating that tool life has been expired.
- Prohibits execution of automatic operation (set for PC parameter “D134 (bit 6)”).
- Prohibits turret indexing (set for PC parameter “D134 (bit 5)”).

8. Reading the Tool Life Management Information

By the command indicated above, the information of the tool life management is output to the common variable of custom macro (option). The variable number where the information of the tool life management is output is set for PC parameter “D606”.

NOTE

① If the information of the tool life management read function is not used or when the optional custom macro is not supported, setting for D606 should be “D606 = 0”.

② This function is used only for reading the information. It is not possible to write the information.

COMMAND

G339 T_. Q_.;

- T. . . . . Specifies a tool group number.
  Range: 1 - Number of used groups
- Q. . . . . Specifies an information number
  Range: 1 - 30 (refer to the following for the item numbers)

<Data output format>

For the output format of the item numbers (argument Q), refer to the table given below.

Item 1	0: Undecided
	1: Managed by “times”
	2: Managed by “minutes”
Item 2	0 - 99999
Item 3 - 12	0 - 9999
Item 13 - 22	0: Usable tool
	1: Used tool
	2: Life expired tool
	3: Skipped tool
Item 23	0 - 99999
Item 24 - 25	0 - 10
Item 26	1 or 0
Item 27	0 - 99999
Item 28 - 29	1 or 0

<Read Information Item Number Table>

Item No.	Contents	Item No.	Contents
01	Tool life count condition	16	State of registered tool number 4
02	Set tool life	17	State of registered tool number 5
03	Registered tool number 1	18	State of registered tool number 6
04	Registered tool number 2	19	State of registered tool number 7
05	Registered tool number 3	20	State of registered tool number 8
06	Registered tool number 4	21	State of registered tool number 9
07	Registered tool number 5	22	State of registered tool number 10
08	Registered tool number 6	23	Present counted tool life
09	Registered tool number 7	24	Selected tool number (Registered tool number of the presently selected tool)
10	Registered tool number 8	25	Remaining number of registered tools (The total number of usable tools in the specified tool group)
11	Registered tool number 9	26	Execution flag (“1” if the specified tool is called in the presently executed program)
12	Registered tool number 10	27	Accumulated cutting time (minutes) (Total length of cutting time the tool in the specified group has been used)
13	State of registered tool number 1	28	Life expired flag (“1” if tool life of all tools in the specified group has been expired.)
14	State of registered tool number 2	29	Life annunciation flag (“1” if a new tool is selected when the tool group is specified next)
15	State of registered tool number 3	30	Spare

9. Reading the PMC Address

By the command indicated below, information of the specified PMC address is output to the common variable of custom macro (option). The variable number where the information of the specified PMC address is output is set for PC parameter “D608”.

NOTE

① If the PMC address read function is not used or when the optional custom macro is not supported, setting for D608 should be “D608 = 0”.

② This function is used only for reading the information. It is not possible to write the information.

COMMAND

G340 F_. A_. Q_.;

- F. . . . . Specifies the number of bytes.
  - F0. . . . Specifies bit.
  - F1. . . . Specifies 1 byte.
  - F2. . . . Specifies 2 bytes.
- A. . . . . Specifies the address.
  - A0. . . . Specifies “R”.
  - A1. . . . Specifies “D”.
  - A2. . . . Specifies “C”.
  - A3. . . . Specifies “K”.
  - A4. . . . Specifies “X”.
  - A5. . . . Specifies “Y”.
  - A6. . . . Specifies “F”.
  - A7. . . . Specifies “G”.
- Q. . . . . Specifies the address number

  When a bit is specified, specification must be made up to one place right to a decimal point.

  When a byte is specified, specification of a number right to a decimal point is not allowed.

NOTE

① The output format to the macro variable is indicated below.

Bit specification 0 or 1

1-byte specification . . . . . Integer (0 - 255)

2-byte specification . . . . . Integer (0 - 65535)

NOTE ② For the designation of an address, the following restrictions apply.

R . . . . . Bit, 1 byte, 2 bytes

D . . . . . Bit, 1 byte, 2 bytes

C . . . . . Bit, 1 byte, 2 bytes

K . . . . . Bit, 1 byte, 2 bytes

X . . . . . Bit only

Y . . . . . Bit only

F . . . . . Bit only

G . . . . . Bit only

Ex.

1) Bit specification, R120.3

   G340 F0. A0. Q120.3;

2) 2-byte specification, D80

   G340 F2. A1. Q80.;

10. Alarm Table

If there is an error with the tool life management related commands, message is displayed. Refer to the following table to find the cause of the error.

Macro Alarm No.	Message	Details of alarm
3015	TOOL ENTRY FORMAT ERROR	The tool life data registration format has an error. Check the registration program.
3016	TOOL ENTRY DATA ERROR	When registering the tool life data, the data contents have an error. Check the specified data.
3017	TOOL ENTRY T DATA OVER	When registering the tool life data, the number of registration tools is greater than 10. Check the registration program.
3018	GROUP CALL FORMAT ERROR	The tool group call command format has an error. Check the machining program.
3019	CALL GROUP DATA ERROR	When calling a tool group, the data contents have an error. Check the specified data.
3020	CALL GROUP NOT REGISTERED	When calling a tool group, the specified tool group has not been registered. Register the tool group.
3021	TOOL LIFE OVER	When calling a tool group, tool life of all tools in the called group has been expired. Change the tools.
3022	TOOL SKIP FORMAT ERROR	The skip command format has an error. Check the machining program.
3023	SKIP TOOL DATA ERROR	In the skip command, the data contents have an error. Check the specified data.
3024	T-LIFE RESET FORMAT ERROR	The reset command format has an error. Check the machining program.
3025	T-LIFE RESET T-DATA ERROR	In the reset command, the data contents have an error. Check the specified data.
3026	DATA IN TOOL GROUP ERROR	The tool life management data has an error. Register the data again.
3027	DATA READ FORMAT ERROR	The tool life management data read command format has an error. Check the machining program.
3028	READ DATA ERROR	In the tool life management data read command, the data contents have an error. Check the specified data.
3029	FORMAT ERROR	The PMC address read command format has an error. Check the machining program.
3030	DATA ERROR	In the PMC address read command, the data contents have an error. Check the specified data.

11. Parameters

The PMC parameters related with the tool life management function are indicated below.

D600 . . . . . Setting of the total number of tool groups

NOTE If the setting for D600 is changed, the tool life data must be registered again. If the function is used without registering the tool life data again, it might cause troubles.

D602 . . . . . Macro variable number for outputting the new tool selection flag

NOTE Pay attention to the common variable range. (#100 - #131 only)

If the optional custom macro is not supported, set “0” for D602.

D604 . . . . . Macro variable number for outputting the tool life expired flag

NOTE Pay attention to the common variable range. (#100 - #131 only)

If the optional custom macro is not supported, set “0” for D604.

D606 . . . . . Macro variable number for outputting the tool life information

NOTE Pay attention to the common variable range. (#100 - #131 only)

If the optional custom macro is not supported, set “0” for D606.

D608 . . . . . Macro variable number for outputting the PMC address

NOTE Pay attention to the common variable range. (#100 - #131 only)

If the optional custom macro is not supported, set “0” for D608.

D253 (bit 1) . . . . . 1: For the tool group where all tools have been used to the tool life, the last tool is called in the next T command.

0: For the tool group where all tools have been used to the tool life, an alarm occurs when the next T command is specified.

CHAPTER K
EXAMPLE PROGRAMS

This chapter describes the programming procedure using several example programs.

CONTENTS

K : EXAMPLE PROGRAMS

1. Programming Steps K–1

2. Example Programs K–2
   - 2.1 Chuck-Work Programming (1) K–3
   - 2.2 Chuck-Work Programming (2) K–18
     - 2.2.1 1st process K–18
     - 2.2.2 2nd process K–23
   - 2.3 Various Part Programs K–28
     - 2.3.1 Grooving K–28
     - 2.3.2 I.D. Deep Hole Drilling K–29
   - 2.4 Milling 1 (Drilling on End Face) K–30
   - 2.5 Milling 2 ..... K–34

1. Programming Steps

The steps to complete a program are summarized below.

When writing a program from the part drawing, refer to the flow chart shown below.

1) Determine which side to be machined and which side to be chucked. (Determination of the 1st and 2nd processes)

↓

2) Translate the part drawing into the drawing for NC operation/programming. (This step may be omitted if the workpiece is simple.)

↓

3) Study the cutting allowance. (Draw the blank workpiece if necessary.)

↓

4) Determine the tools to be used. (Creating the tooling sheet)

↓

5) Determine the finishing conditions (cutting speeds, feedrates), and create the part program for finishing.

↓

6) Determine the finishing allowance and the rough cutting conditions (depth of cuts, cutting speeds, and feedrates), and create the part program for rough cutting.

↓

7) Create the part program for other processes such as grooving and thread cutting.

↓

8) Arrange the part programs of individual processes to complete the program.

2. Example Programs

A variety of machining methods and programming methods are used when machining workpieces. This section describes programs which will be used frequently in actual production.

Study these example programs and then create programs which better suit your actual production requirements. Note that the programming methods and values shown in the example programs may not apply to your specific needs.

WARNING

① **Workpiece materials and shapes vary widely among machine users. Mori Seiki cannot predict the workpiece clamping method, spindle speed, feedrate, depth of cut, and width of cut, etc., that will be required in each case and it is therefore the user's responsibility to determine the appropriate settings.**

If you have difficulty determining these conditions, consult the fixture and tool manufacturers. Machining under inappropriate machining conditions can cause the workpiece or cutting tool to fly out during machining, causing accidents involving serious injuries or damage to the machine. It will also adversely affect machining accuracy.

② **The programs given in this section are not applicable to all types of machines. Programs must be written while taking the performance of the machine into consideration and be executed with due consideration given to safety. If the machine's capacity is not taken into account when writing the program, the workpiece or cutting tool may fly out during machining, causing accidents involving serious injuries or damage to the machine.**

2.1 Chuck-Work Programming (1)

1) Determine which side to be machined and which side to be chucked.

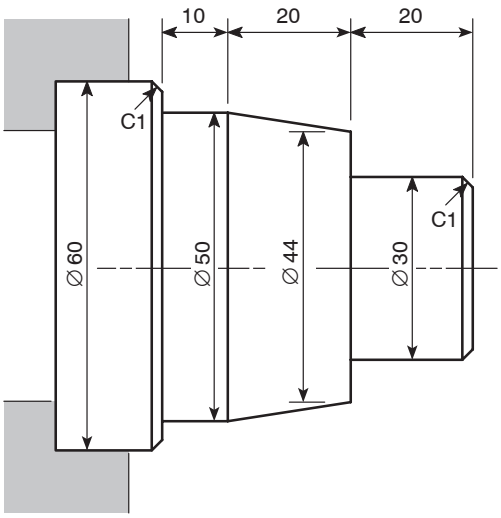

The workpiece should be machined with the 60 mm diameter section chucked.

WARNING

Before starting spindle rotation, check that the workpiece is securely clamped. Or, if performing center-work, check that the tailstock spindle center securely supports the workpiece. (Applies only to machines equipped with a tailstock.)

If the workpiece is not securely clamped or supported, it will fly out of the chuck when the spindle is rotated, causing serious injuries or damage to the machine.

2) Translate the part drawing into the drawing for NC operation/programming.

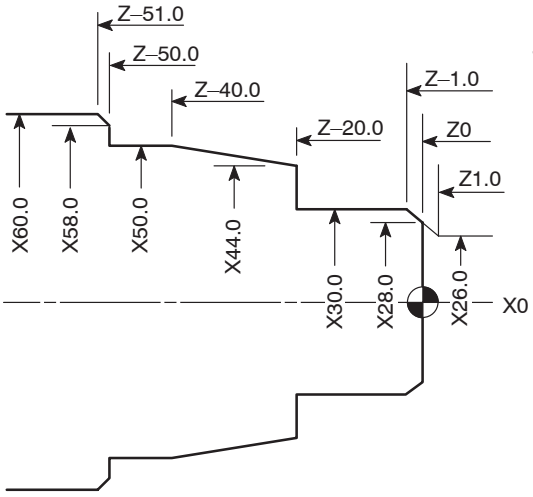

On the drawing, enter the dimensions to be used for programming.

3) Study the cutting allowance.

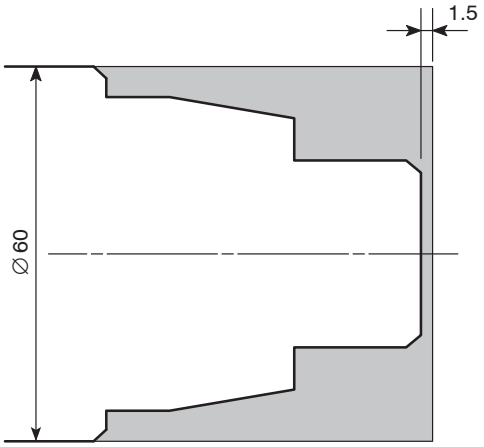

Draw the blank workpiece. The stock on the end face should be 1.5 mm.

4) Determine the tools to be used.

Rough cutting – O.D. and facing
(Tool nose radius: 0.8 mm)

Turret head station No.: 1

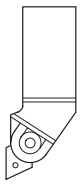

Finishing – O.D. and facing
(Tool nose radius: 0.8 mm)

Turret head station No.: 2

5) Determine the finishing conditions (cutting speeds, feedrates), and create the part program for finishing. (Tool nose radius: 0)

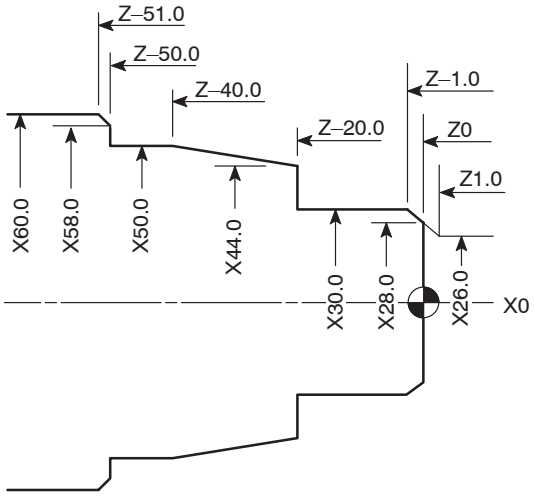


```
N2;
G50 S2000; ..... Setting the spindle speed limit for automatic
                 operation at 2000 min–1
G00 T0202 (M42)*; ..... Selecting the No. 2 tool
G96 S180 M03; ..... Starting the spindle or spindle 1 in the normal
                    direction at the cutting speed of 180 m/min
X34.0 Z20.0;
G01 Z0 F1.0;
X0 F0.15;
G00 X26.0 Z1.0;
G01 X30.0 Z–1.0 F0.2;
Z–20.0;
X44.0;
X50.0 Z–40.0;
Z–50.0;
X58.0;
X62.0 Z–52.0;
G00 U1.0 Z20.0 M09;
                 ... Program for finishing
                     – Feedrate for facing:          0.15 mm/rev
                     – Feedrate for O.D. cutting:    0.2 mm/rev
X100.0 Z100.0 M05; ..... Moving to a position where the turret head can be
                         rotated; the spindle stops.
M30;
```

NOTE Commands in ( ) identified by "*" are used only for the machine equipped with a transmission.

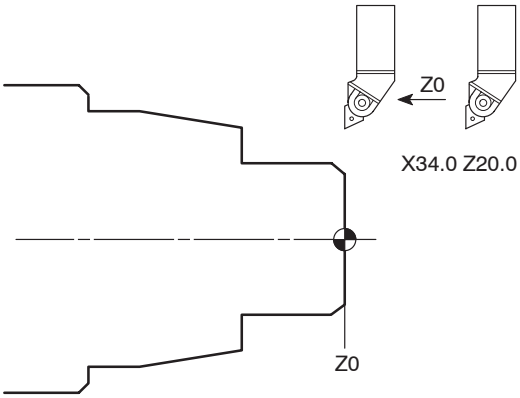

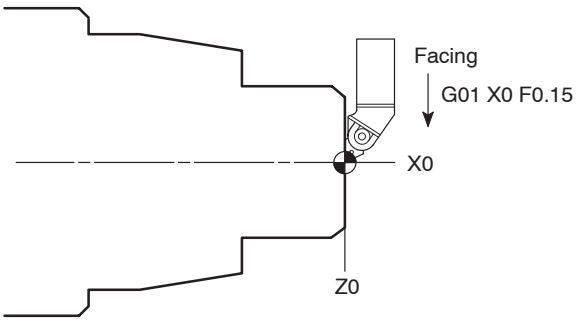

N2;
G50 S2000;
G00 T0202 (M42);
G96 S180 M03;
X34.0 Z20.0;
G01 Z0 F1.0;
X0 F0.15;
G00 X26.0 Z1.0;
G01 X30.0 Z–1.0 F0.2;
Z–20.0;
X44.0;
X50.0 Z–40.0;
Z–50.0;
X58.0;
X62.0 Z–52.0;
G00 U1.0 Z20.0 M09;
X100.0 Z100.0 M05;
M30;

N2;
G50 S2000;
G00 T0202 (M42);
G96 S180 M03;
X34.0 Z20.0;
G01 Z0 F1.0;
X0 F0.15;
G00 X26.0 Z1.0;
G01 X30.0 Z–1.0 F0.2;
Z–20.0;
X44.0;
X50.0 Z–40.0;
Z–50.0;
X58.0;
X62.0 Z–52.0;
G00 U1.0 Z20.0 M09;
X100.0 Z100.0 M05;
M30;

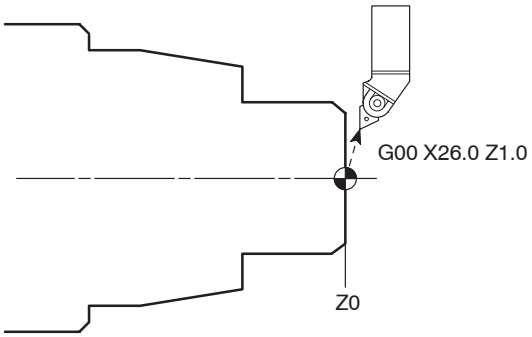

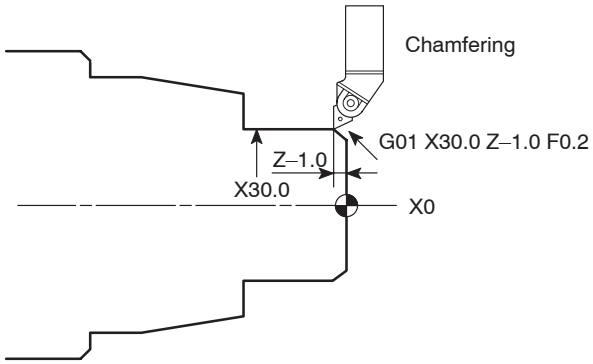


```
N2;
G50 S2000;
G00 T0202 (M42);
G96 S180 M03;
X34.0 Z20.0;
G01 Z0 F1.0;
X0 F0.15;
G00 X26.0 Z1.0;
G01 X30.0 Z–1.0 F0.2;
Z–20.0;
X44.0;
X50.0 Z–40.0;
Z–50.0;
X58.0;
X62.0 Z–52.0;
G00 U1.0 Z20.0 M09;
X100.0 Z100.0 M05;
M30;
```

```
N2;
G50 S2000;
G00 T0202 (M42);
G96 S180 M03;
X34.0 Z20.0;
G01 Z0 F1.0;
X0 F0.15;
G00 X26.0 Z1.0;
G01 X30.0 Z–1.0 F0.2;
Z–20.0;
X44.0;
X50.0 Z–40.0;
Z–50.0;
X58.0;
X62.0 Z–52.0;
G00 U1.0 Z20.0 M09;
X100.0 Z100.0 M05;
M30;
```

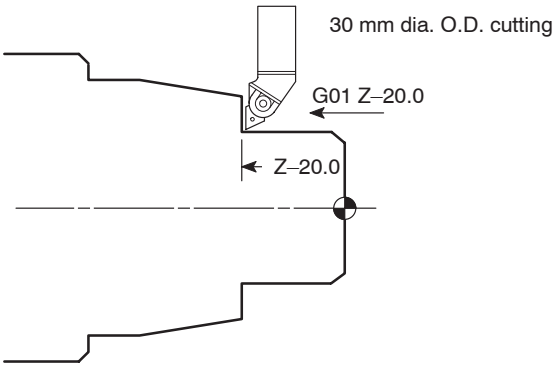

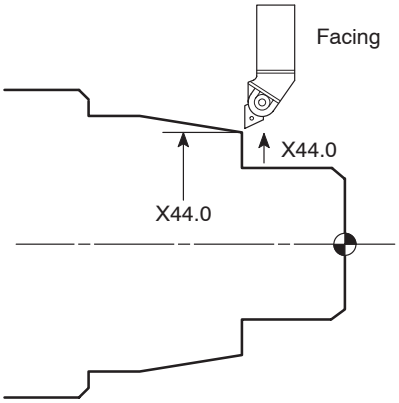

N2;
G50 S2000;
G00 T0202 (M42);
G96 S180 M03;
X34.0 Z20.0;
G01 Z0 F1.0;
X0 F0.15;
G00 X26.0 Z1.0;
G01 X30.0 Z–1.0 F0.2;
Z–20.0;
X44.0;
X50.0 Z–40.0;
Z–50.0;
X58.0;
X62.0 Z–52.0;
G00 U1.0 Z20.0 M09;
X100.0 Z100.0 M05;
M30;

N2;
G50 S2000;
G00 T0202 (M42);
G96 S180 M03;
X34.0 Z20.0;
G01 Z0 F1.0;
X0 F0.15;
G00 X26.0 Z1.0;
G01 X30.0 Z–1.0 F0.2;
Z–20.0;
X44.0;
X50.0 Z–40.0;
Z–50.0;
X58.0;
X62.0 Z–52.0;
G00 U1.0 Z20.0 M09;
X100.0 Z100.0 M05;
M30;

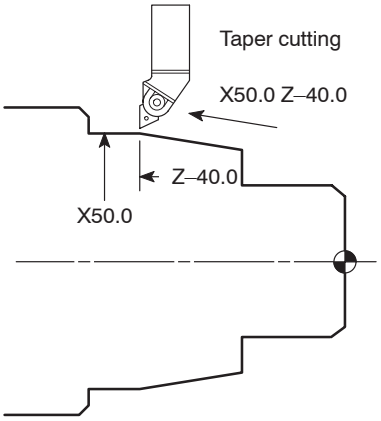

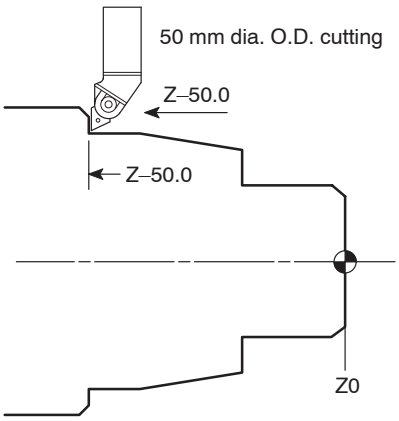


```
N2;
G50 S2000;
G00 T0202 (M42);
G96 S180 M03;
X34.0 Z20.0;
G01 Z0 F1.0;
X0 F0.15;
G00 X26.0 Z1.0;
G01 X30.0 Z–1.0 F0.2;
Z–20.0;
X44.0;
X50.0 Z–40.0;
Z–50.0;
X58.0;
X62.0 Z–52.0;
G00 U1.0 Z20.0 M09;
X100.0 Z100.0 M05;
M30;
```

```
N2;
G50 S2000;
G00 T0202 (M42);
G96 S180 M03;
X34.0 Z20.0;
G01 Z0 F1.0;
X0 F0.15;
G00 X26.0 Z1.0;
G01 X30.0 Z–1.0 F0.2;
Z–20.0;
X44.0;
X50.0 Z–40.0;
Z–50.0;
X58.0;
X62.0 Z–52.0;
G00 U1.0 Z20.0 M09;
X100.0 Z100.0 M05;
M30;
```

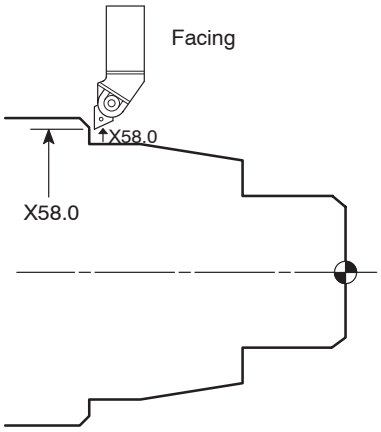

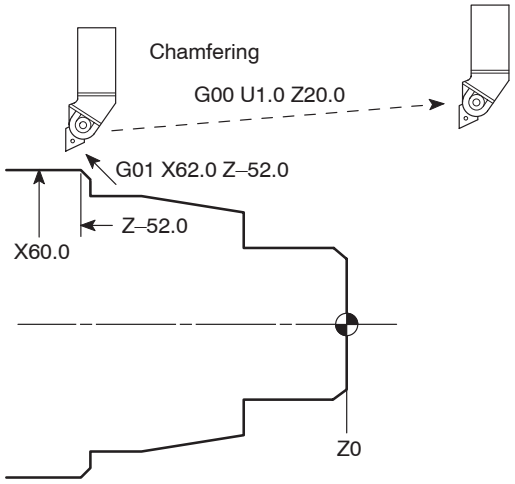


```
N2;
G50 S2000;
G00 T0202 (M42);
G96 S180 M03;
X34.0 Z20.0;
G01 Z0 F1.0;
X0 F0.15;
G00 X26.0 Z1.0;
G01 X30.0 Z–1.0 F0.2;
Z–20.0;
X44.0;
X50.0 Z–40.0;
Z–50.0;
X58.0;
X62.0 Z–52.0;
G00 U1.0 Z20.0 M09;
X100.0 Z100.0 M05;
M30;
```

```
N2;
G50 S2000;
G00 T0202 (M42);
G96 S180 M03;
X34.0 Z20.0;
G01 Z0 F1.0;
X0 F0.15;
G00 X26.0 Z1.0;
G01 X30.0 Z–1.0 F0.2;
Z–20.0;
X44.0;
X50.0 Z–40.0;
Z–50.0;
X58.0;
X62.0 Z–52.0;
G00 U1.0 Z20.0 M09;
X100.0 Z100.0 M05;
M30;
```

6) Determine the finishing allowance and the rough cutting conditions (depth of cuts, cutting speeds, and feedrates), and create the part program for rough cutting.

```
N1;
G50 S2000; ..... Setting the spindle speed limit for automatic operation
                 at 2000 min−1
G00 T0101 (M41)*; ..... Selecting the No. 1 tool
G96 S120 M03; ..... Starting the spindle or spindle 1 in the normal
                    direction at the cutting speed of 120 m/min
X68.0 Z20.0 M08;
G01 Z0.1 F1.0;
X10.0 F0.2;
X0 F0.1;
G00 X52.0 Z1.0;
G01 Z–49.9 F0.25;
G00 U2.0 Z1.0;
X44.0;
G01 Z–19.9;
G00 U2.0 Z1.0;
X36.0;
G01 Z–19.9;
G00 U2.0 Z1.0;
X26.3;
G01 X30.3 Z–1.0;
Z–19.9;
X44.3;
X50.3 Z–39.9;
Z–49.9;
X58.3;
X62.3 Z–51.9;
G00 U1.0 Z20.0;
```

..... Program for rough cutting

- Feedrate for facing: 0.2 mm/rev up to X10.0
  0.1 mm/rev up to X0

NOTE In the constant cutting speed mode, the spindle speed increases as the cutting tool moves closer to the center. However, since the spindle speed is clamped at the value specified with “G50 S_ ;”, the cutting speed will be lowered near the center of the spindle. Due to this, higher load is applied to the tool tip causing the insert to be broken.

Therefore, the feedrate must be lowered near the spindle center to reduce load applied to the tool tip.

- Feedrate for O.D. cutting: 0.25 mm/rev
- Finishing allowance (X): 0.3 mm (in diameter)
- Finishing allowance (Z): 0.1 mm

```
X100.0 Z100.0; ..... Moving to a position where the turret head can be
                     rotated
M01;
```

NOTE Commands in ( ) identified by “*” are used only for the machine equipped with a transmission.

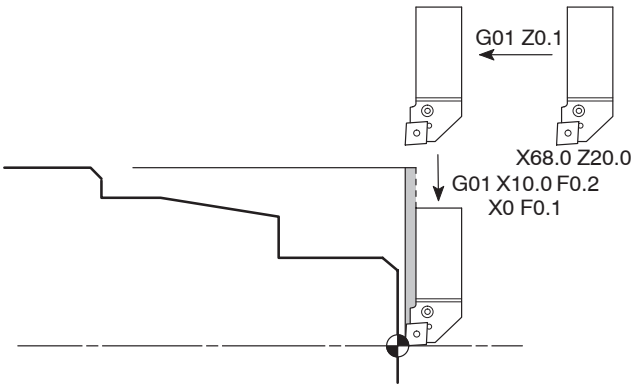

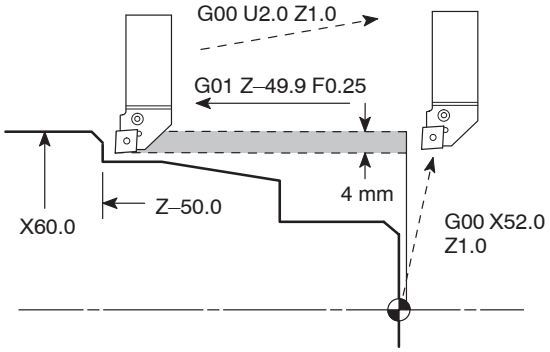

N1;
G50 S2000;
G00 T0101 (M41);
G96 S120 M03;
X68.0 Z20.0 M08;
G01 Z0.1 F1.0;
X10.0 F0.2;
X0 F0.1;
G00 X52.0 Z1.0;
G01 Z–49.9 F0.25;
G00 U2.0 Z1.0;
X44.0;
G01 Z–19.9;
G00 U2.0 Z1.0;
X36.0;
G01 Z–19.9;
G00 U2.0 Z1.0;
X26.3;
G01 X30.3 Z–1.0;
Z–19.9;
X44.3;
X50.3 Z–39.9;
Z–49.9;
X58.3;
X62.3 Z–51.9;
G00 U1.0 Z20.0;
X100.0 Z100.0;
M01;

N1;
G50 S2000;
G00 T0101 (M41);
G96 S120 M03;
X68.0 Z20.0 M08;
G01 Z0.1 F1.0;
X10.0 F0.2;
X0 F0.1;
G00 X52.0 Z1.0;
G01 Z–49.9 F0.25;
G00 U2.0 Z1.0;
X44.0;
G01 Z–19.9;
G00 U2.0 Z1.0;
X36.0;
G01 Z–19.9;
G00 U2.0 Z1.0;
X26.3;
G01 X30.3 Z–1.0;
Z–19.9;
X44.3;
X50.3 Z–39.9;
Z–49.9;
X58.3;
X62.3 Z–51.9;
G00 U1.0 Z20.0;
X100.0 Z100.0;
M01;

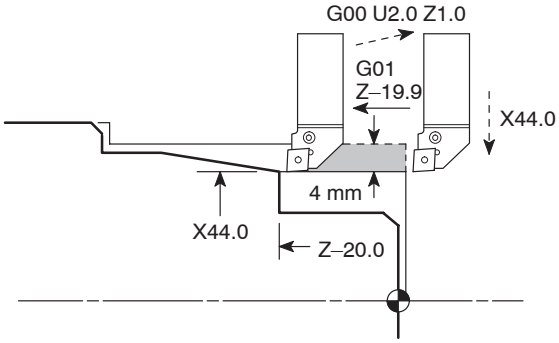

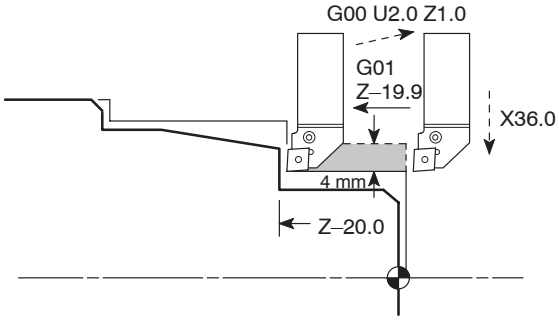


```
N1;
G50 S2000;
G00 T0101 (M41);
G96 S120 M03;
X68.0 Z20.0 M08;
G01 Z0.1 F1.0;
X10.0 F0.2;
X0 F0.1;
G00 X52.0 Z1.0;
G01 Z–49.9 F0.25;
G00 U2.0 Z1.0;
X44.0;
G01 Z–19.9;
G00 U2.0 Z1.0;
X36.0;
G01 Z–19.9;
G00 U2.0 Z1.0;
X26.3;
G01 X30.3 Z–1.0;
Z–19.9;
X44.3;
X50.3 Z–39.9;
Z–49.9;
X58.3;
X62.3 Z–51.9;
G00 U1.0 Z20.0;
X100.0 Z100.0;
M01;
```

```
N1;
G50 S2000;
G00 T0101 (M41);
G96 S120 M03;
X68.0 Z20.0 M08;
G01 Z0.1 F1.0;
X10.0 F0.2;
X0 F0.1;
G00 X52.0 Z1.0;
G01 Z–49.9 F0.25;
G00 U2.0 Z1.0;
X44.0;
G01 Z–19.9;
G00 U2.0 Z1.0;
X36.0;
G01 Z–19.9;
G00 U2.0 Z1.0;
X26.3;
G01 X30.3 Z–1.0;
Z–19.9;
X44.3;
X50.3 Z–39.9;
Z–49.9;
X58.3;
X62.3 Z–51.9;
G00 U1.0 Z20.0;
X100.0 Z100.0;
M01;
```

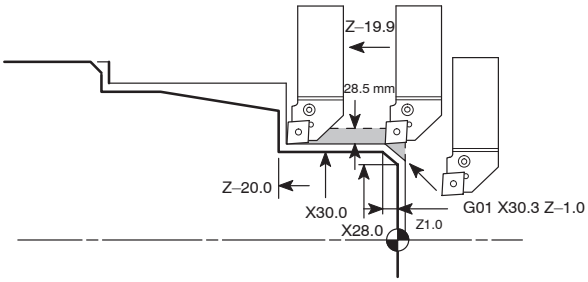

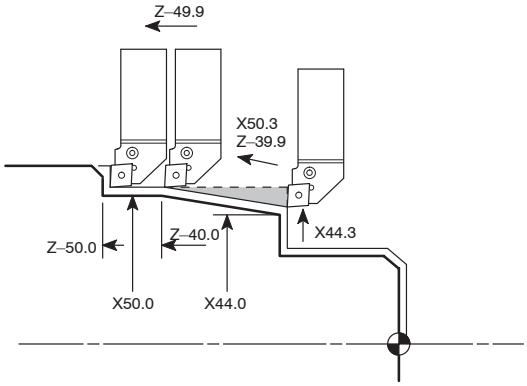


```
N1;
G50 S2000;
G00 T0101 (M41);
G96 S120 M03;
X68.0 Z20.0 M08;
G01 Z0.1 F1.0;
X10.0 F0.2;
X0 F0.1;
G00 X52.0 Z1.0;
G01 Z–49.9 F0.25;
G00 U2.0 Z1.0;
X44.0;
G01 Z–19.9;
G00 U2.0 Z1.0;
X36.0;
G01 Z–19.9;
G00 U2.0 Z1.0;
X26.3;
G01 X30.3 Z–1.0;
Z–19.9;
X44.3;
X50.3 Z–39.9;
Z–49.9;
X58.3;
X62.3 Z–51.9;
G00 U1.0 Z20.0;
X100.0 Z100.0;
M01;
```

```
N1;
G50 S2000;
G00 T0101 (M41);
G96 S120 M03;
X68.0 Z20.0 M08;
G01 Z0.1 F1.0;
X10.0 F0.2;
X0 F0.1;
G00 X52.0 Z1.0;
G01 Z–49.9 F0.25;
G00 U2.0 Z1.0;
X44.0;
G01 Z–19.9;
G00 U2.0 Z1.0;
X36.0;
G01 Z–19.9;
G00 U2.0 Z1.0;
X26.3;
G01 X30.3 Z–1.0;
Z–19.9;
X44.3;
X50.3 Z–39.9;
Z–49.9;
X58.3;
X62.3 Z–51.9;
G00 U1.0 Z20.0;
X100.0 Z100.0;
M01;
```

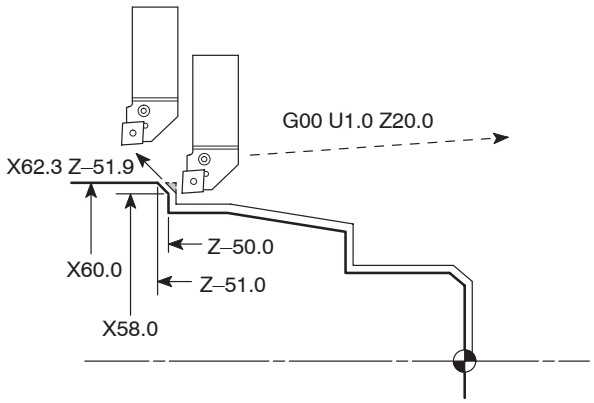


```
N1;
G50 S2000;
G00 T0101 (M41);
G96 S120 M03;
X68.0 Z20.0 M08;
G01 Z0.1 F1.0;
X10.0 F0.2;
X0 F0.1;
G00 X52.0 Z1.0;
G01 Z–49.9 F0.25;
G00 U2.0 Z1.0;
X44.0;
G01 Z–19.9;
G00 U2.0 Z1.0;
X36.0;
G01 Z–19.9;
G00 U2.0 Z1.0;
X26.3;
G01 X30.3 Z–1.0;
Z–19.9;
X44.3;
X50.3 Z–39.9;
Z–49.9;
X58.3;
X62.3 Z–51.9;
G00 U1.0 Z20.0;
X100.0 Z100.0;
M01;
```

7) Create the part program for other processes such as grooving and thread cutting.
In this example operation, there are no other processes.

8) Arrange the part programs of individual processes to complete the program.

```
O0001;
N1;                          N2;
G50 S2000;                   G50 S2000;
G00 T0101 (M41)*;            G00 T0202 (M42)*;
G96 S120 M03;                G96 S180 M03;
X68.0 Z20.0 M08;             X34.0 Z20.0;
G01 Z0.1 F1.0;               G01 Z0 F1.0;
X10.0 F0.2;                  X0 F0.15;
X0 F0.1;                     G00 X26.0 Z1.0;
G00 X52.0 Z1.0;              G01 X30.0 Z–1.0 F0.2;   . . . Part program
G01 Z–49.9 F0.25;            Z–20.0;                       for finishing
G00 U2.0 Z1.0;               X44.0;
X44.0;                       X50.0 Z–40.0;
G01 Z–19.9;                  Z–50.0;
G00 U2.0 Z1.0;               X58.0;
X36.0;                       X62.0 Z–52.0;
G01 Z–19.9;                  G00 U1.0 Z20.0 M09;
G00 U2.0 Z1.0;               X100.0 Z100.0 M05;
X26.3;                       M30;
G01 X30.3 Z–1.0;
Z–19.9;
X44.3;
X50.3 Z–39.9;
Z–49.9;
X58.3;
X62.3 Z–51.9;
G00 U1.0 Z20.0;
X100.0 Z100.0;
M01;
```

. . . Part program for rough cutting

NOTE Commands in ( ) identified by "*" are used only for the machine equipped with a transmission.

NOTE In actual cutting, tool nose radius must be taken into consideration (tool nose radius: 0.8 mm).

The program using the manual tool nose radius offset function is shown below.

```
O0001;
N1;
G50 S2000;
G00 T0101 (M41);
G96 S120 M03;
X68.0 Z20.0 M08;
G01 Z0.1 F1.0;
X10.0 F0.2;
X–1.6 F0.1;
G00 X52.0 Z1.0;
G01 Z–49.9 F0.25;
G00 U2.0 Z1.0;
X44.0;
G01 Z–19.9;
G00 U2.0 Z1.0;
X36.0;
G01 Z–19.9;
G00 U2.0 Z1.0;
X26.3;
G01 X30.3 Z–1.0;
Z–19.9;
X44.3;
X50.3 Z–39.9;
Z–49.9;
X58.3;
X62.3 Z–51.9;
G00 U1.0 Z20.0;
X100.0 Z100.0;
M01;
```

. . . Part program for rough cutting

```
N2;
G50 S2000;
G00 T0202 (M42);
G96 S180 M03;
X34.0 Z20.0;
G01 Z0 F1.0;
X–1.6 F0.15;
G00 X25.06 Z1.0;
G01 X30.0 Z–1.47 F0.2;
Z–20.0;
X43.779;
X50.0 Z–40.740;
Z–50.0;
X57.06;
X62.0 Z–52.47;
G00 U1.0 Z20.0 M09;
X100.0 Z100.0 M05;
M30;
```

. . . Part program for finishing

2.2 Chuck-Work Programming (2)

<Blank workpiece drawing>

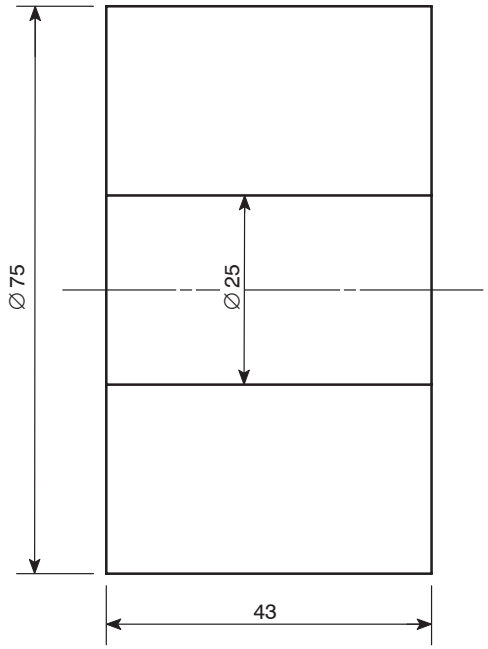

<Part drawing>

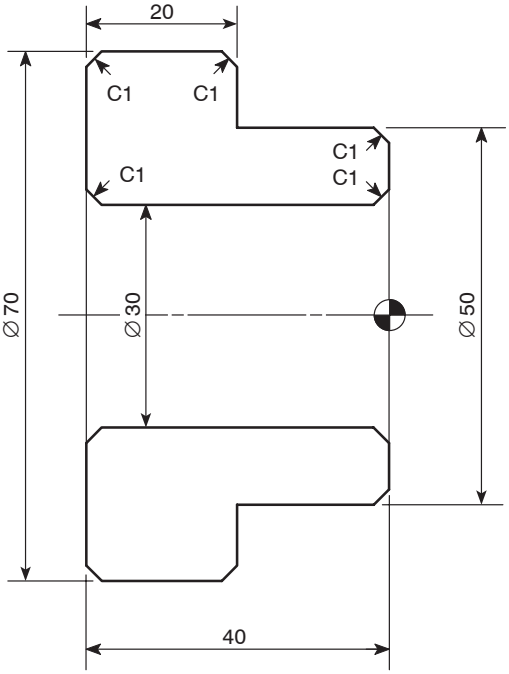

<Dimensions of blank workpiece>

Blank Workpiece		Description
Material		AISI 1045 (Carbon steel)
Dimensions (mm)	O.D.	75
	I.D.	25
	Length	43

2.2.1 1st process

1) Determine which side to be machined and which side to be chucked.

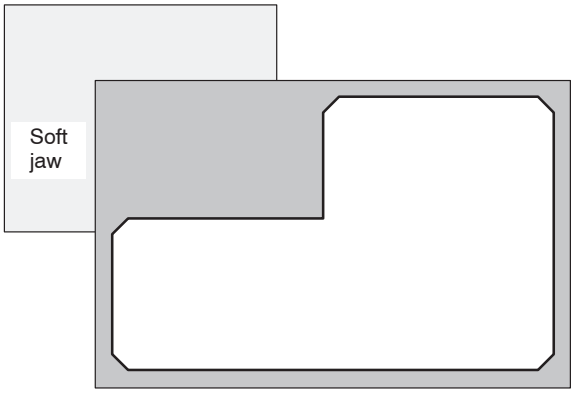

The right side in the part drawing should be chucked to machine the left side.

WARNING

Before starting spindle rotation, check that the workpiece is securely clamped. Or, if performing center-work, check that the tailstock spindle center securely supports the workpiece. (Applies only to machines equipped with a tailstock.)
If the workpiece is not securely clamped or supported, it will fly out of the chuck when the spindle is rotated, causing serious injuries or damage to the machine.

2) Translate the part drawing into the drawing for NC operation/programming.

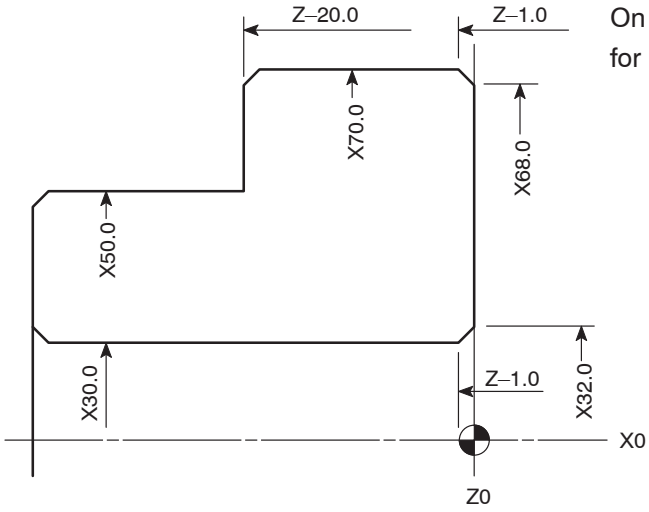

On the drawing, enter the dimensions to be used for programming.

3) Study the cutting allowance.

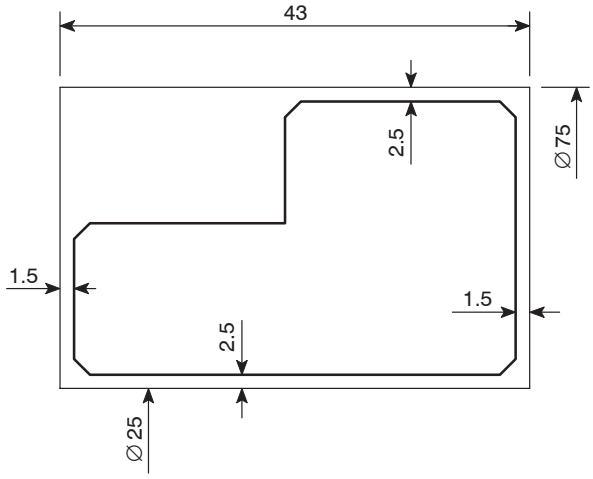

Draw the blank workpiece. The stock on the end face should be 1.5 mm and stock on O.D. and I.D. should be 2.5 mm.

4) Determine the tools to be used.

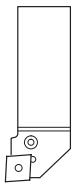

Rough cutting – O.D. and facing
(Tool nose radius: 0.8 mm)

Turret head station No.: 1

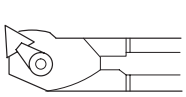

Rough cutting and finishing – I.D.
(Tool nose radius: 0.8 mm)

Turret head station No.: 2

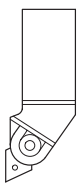

Finishing – O.D. and facing
(Tool nose radius: 0.8 mm)

Turret head station No.: 3

5) Determine the finishing conditions (cutting speeds, feedrates), and create the part program for finishing. (Tool nose radius: 0.8 mm)

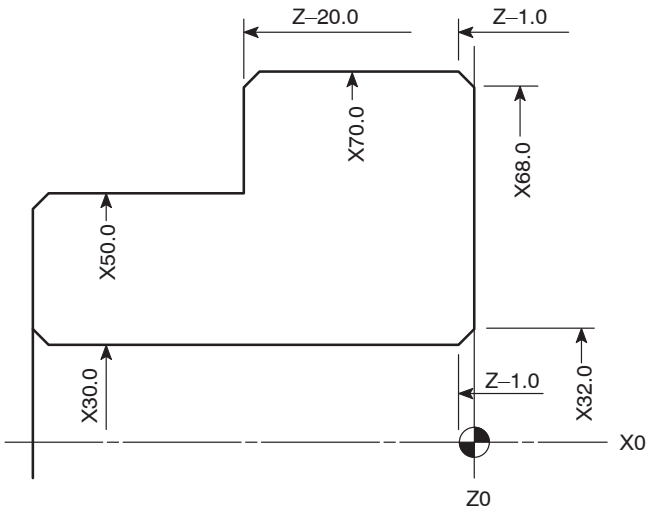


```
N3;
G50 S2500; ..... Setting the spindle speed limit for automatic operation
                 at 2500 min−1
G00 T0303 (M42)*; ..... Selecting the No. 3 tool
G96 S180 M03; ..... Starting the spindle or spindle 1 in the normal
                    direction at the cutting speed of 180 m/min
X74.0 Z20.0;
G01 Z0 F1.0;
X28.0 F0.2;          ... Program for finishing using the manual tool nose
G00 X65.06 Z1.0;         radius offset function
G01 X70.0 Z–1.47;        – Feedrate for facing:      0.2 mm/rev
Z–21.0 F0.25;            – Feedrate for O.D. cutting: 0.25 mm/rev
G00 U1.0 Z20.0 M09;
X100.0 Z100.0 M05; ..... Moving to a position where the turret head can be
                         rotated; the spindle stops.
M30;
```

NOTE Commands in ( ) identified by "*" are used only for the machine equipped with a transmission.

6) Determine the finishing allowance and the rough cutting conditions (depth of cuts, cutting speeds, and feedrates), and create the part program for rough cutting. (Tool nose radius: 0.8 mm)

```
N1;
G50 S2000; ..... Setting the spindle speed limit for automatic operation
                 at 2000 min–1
G00 T0101 (M41)*; ..... Selecting the No. 1 tool
G96 S120 M03; ..... Starting the spindle or spindle 1 in the normal
                    direction at the cutting speed of 120 m/min
X84.0 Z20.0 M08;
G01 Z0.1 F1.0;
X20.0 F0.25;          ... Program for rough cutting
G00 X66.3 Z1.0;           – Feedrate for facing:      0.25 mm/rev
G01 X70.3 Z–1.0;          – Feedrate for O.D. cutting: 0.3 mm/rev
Z–22.0 F0.3;
G00 U1.0 Z20.0;
X100.0 Z100.0; ..... Moving to a position where the turret head can be
                     rotated
M01;

N2;
G00 T0202 (M42)*; ..... Selecting the No. 2 tool
G97 S1000 M03; ..... Starting the spindle or spindle 1 in the normal
                     direction at 1000 min–1 (cutting speed: 94 m/min)
X29.7 Z20.0;
G01 Z2.0 F1.0;
Z–42.0 F0.2;          ... I.D. rough cutting program and finish chamfering
G00 U–1.0 Z1.0;           program using the manual tool nose radius
X34.94;                   offset function
G01 X29.0 Z–1.97;         – Feedrate: 0.2 mm/rev
G00 Z20.0;
X100.0 Z100.0; ..... Moving to a position where the turret head can be
                     rotated
M01;
```

NOTE Commands in ( ) identified by "*" are used only for the machine equipped with a transmission.

7) Create the part program of other processes such as grooving and thread cutting.

For the example workpiece, there are no other processes.

8) Arrange the part programs of individual processes to complete the program.

```
O0001;
N1;
G50 S2000;
G00 T0101 (M41)*;
G96 S120 M03;
X84.0 Z20.0 M08;
G01 Z0.1 F1.0;
X20.0 F0.25;
G00 X66.3 Z1.0;
G01 X70.3 Z–1.0;
Z–22.0 F0.3;
G00 U1.0 Z20.0;
X100.0 Z100.0;
M01;
```

```
N2;
G00 T0202 (M42)*;
G97 S1000 M03;
X29.7 Z20.0;
G01 Z2.0 F1.0;
Z–42.0 F0.2;
G00 U–1.0 Z1.0;
X34.94;
G01 X29.0 Z–1.97;
G00 Z20.0;
X100.0 Z100.0;
M01;
```

```
N3;
G50 S2500;
G00 T0303 (M42)*;
G96 S180 M03;
X74.0 Z20.0;
G01 Z0 F1.0;
X28.0 F0.2;
G00 X65.06 Z1.0;
G01 X70.0 Z–1.47;
Z–21.0 F0.25;
G00 U1.0 Z20.0 M09;
X100.0 Z100.0 M05;
M30;
```

NOTE Commands in ( ) identified by "*" are used only for the machine equipped with a transmission.

2.2.2 2nd process

1) Determine which side to be machined and which side to be chucked.

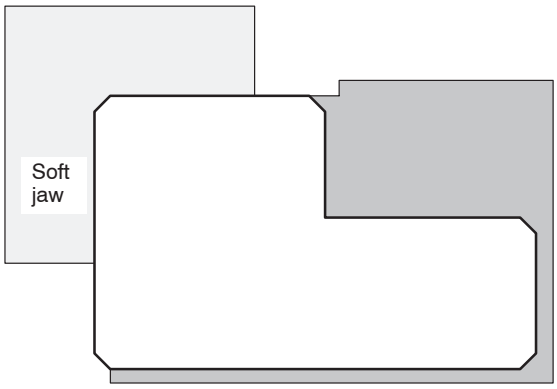

The left side in the part drawing should be chucked to machine the right side.
Since the left side in the part drawing was machined in the 1st process, the right side is machined in the 2nd process.

WARNING

Before starting spindle rotation, check that the workpiece is securely clamped. Or, if performing center-work, check that the tailstock spindle center securely supports the workpiece. (Applies only to machines equipped with a tailstock.)

If the workpiece is not securely clamped or supported, it will fly out of the chuck when the spindle is rotated, causing serious injuries or damage to the machine.

2) Translate the part drawing into the drawing for NC operation/programming.

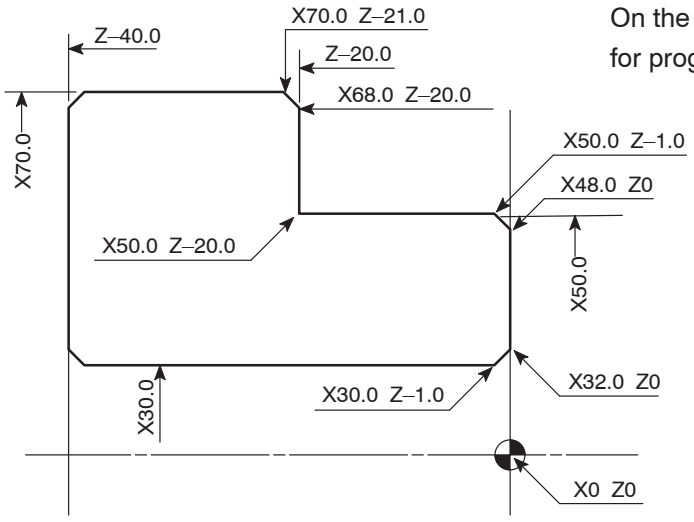

On the drawing, enter the dimensions to be used for programming.

3) Study the cutting allowance.

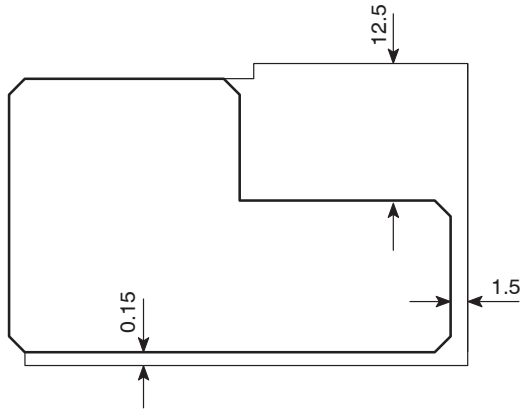

Draw the blank workpiece. The stock on the end face should be 1.5 mm, stock on O.D. 12.5 mm, and that on I.D. 0.15 mm.

NOTE The stock of 0.15 mm on I.D. is the finishing allowance.

4) Determine the tools to be used.

Rough cutting – O.D. and facing
(Tool nose radius: 0.8 mm)

Turret head station No.: 1

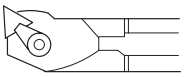

Finishing – I.D.
(Tool nose radius: 0.8 mm)

Turret head station No.: 2

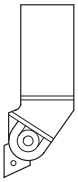

Finishing – O.D. and facing
(Tool nose radius: 0.8 mm)

Turret head station No.: 3

5) Determine the finishing conditions (cutting speeds, feedrates), and create the part program for finishing. (Tool nose radius: 0.8 mm)

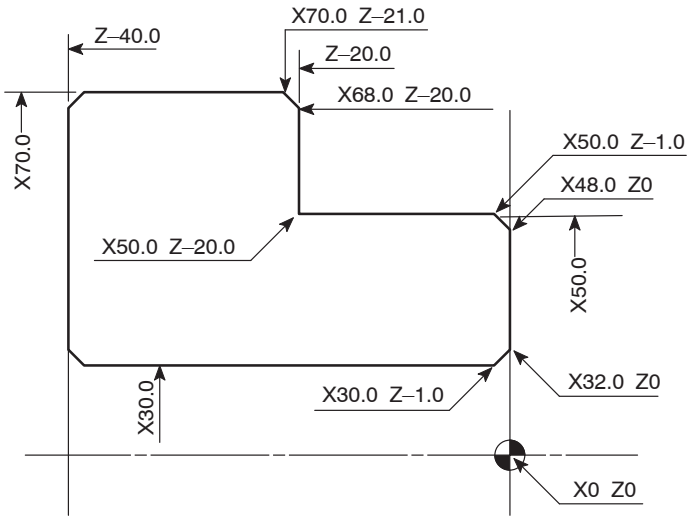


```
N2;
G00 T0202 (M42)*; . . . . . Selecting the No. 2 tool
G97 S1500 M03; . . . . . Starting the spindle or spindle 1 in the normal
                         direction at
                         1500 min–1 (cutting speed: 165 m/min)

X34.94 Z20.0;
G01 Z1.0 F1.0;           . . . Program for finishing using the manual tool nose
X30.0 Z–1.47 F0.15;            radius offset function
Z–41.0;                        – Feedrate for I.D. cutting:  0.15 mm/rev
G00 U–1.0 Z20.0;
X100.0 Z100.0; . . . . . Moving to a position where the turret head can be
                         rotated
M01;

N3;
G50 S2500; . . . . . Setting the spindle speed limit for automatic operation
                         at 2500 min–1
G00 T0303 (M42)*; . . . . . Selecting the No. 3 tool
G96 S180 M03; . . . . . Starting the spindle or spindle 1 in the normal
                         direction at cutting speed of 180 m/min

X54.0 Z20.0;
G01 Z0 F1.0;
X28.0 F0.2;              . . . Program for finishing using the manual tool nose
G00 X45.06 Z1.0;               radius offset function
G01 X50.0 Z–1.47;              – Feedrate for facing:        0.2 mm/rev
Z–20.0 F0.25;                  – Feedrate for O.D. cutting:  0.25 mm/rev
X67.06;
X72.0 Z–22.47 F0.2;
G00 U1.0 Z20.0 M09;
X100.0 Z100.0 M05; . . . . . Moving to a position where the turret head can be
                         rotated; the spindle stops.
M30;
```

NOTE Commands in ( ) identified by "*" are used only for the machine equipped with a transmission.

6) Determine the finishing allowance and the rough cutting conditions (depth of cuts, cutting speeds, and feedrates), and create the part program for rough cutting. (Tool nose radius: 0.8 mm)

```
N1;
G50 S2000; ..... Setting the spindle speed limit for automatic operation
                 at 2000 min–1
G00 T0101 (M41)*; ..... Selecting the No. 1 tool
G96 S120 M03; ..... Starting the spindle or spindle 1 in the normal
                    direction at the cutting speed of 120 m/min
X84.0 Z20.0 M08;
G01 Z0.1 F1.0;
X20.0 F0.25;
G00 X66.0 Z1.0;
G01 Z–19.9 F0.3;
G00 U2.0 Z1.0;
X57.0;                 ... Program for rough cutting
G01 Z–19.9;                – Feedrate for facing:          0.25 mm/rev
G00 U2.0 Z1.0;             – Feedrate for O.D. cutting:    0.3 mm/rev
X46.3;
G01 X50.3 Z–1.0;
Z–19.9;
X68.3;
X72.3 Z–21.9;
G00 U1.0 Z20.0;
X100.0 Z100.0; ..... Moving to a position where the turret head can be
                     rotated
M01;
```

NOTE Commands in ( ) identified by "*" are used only for the machine equipped with a transmission.

7) Create the part program of other processes such as grooving and thread cutting.

For the example workpiece, there are no other processes.

8) Arrange the part programs of individual processes to complete the program.

```
O0002;
N1;
G50 S2000;
G00 T0101 (M41)*;
G96 S120 M03;
X84.0 Z20.0 M08;
G01 Z0.1 F1.0;
X20.0 F0.25;
G00 X66.0 Z1.0;
G01 Z–19.9 F0.3;
G00 U2.0 Z1.0;
X57.0;
G01 Z–19.9;
G00 U2.0 Z1.0;
X46.3;
G01 X50.3 Z–1.0;
Z–19.9;
X68.3;
X72.3 Z–21.9;
G00 U1.0 Z20.0;
X100.0 Z100.0;
M01;
```

```
N2;
G00 T0202 (M42)*;
G97 S1500 M03;
X34.94 Z20.0;
G01 Z1.0 F1.0;
X30.0 Z–1.47 F0.15;
Z–41.0;
G00 U1.0 Z20.0;
X100.0 Z100.0;
M01;
```

```
N3;
G50 S2500;
G00 T0303 (M42)*;
G96 S180 M03;
X54.0 Z20.0;
G01 Z0 F1.0;
X28.0 F0.2;
G00 X45.06 Z1.0;
G01 X50.0 Z–1.47;
Z–20.0 F0.25;
X67.06;
X72.0 Z–22.47 F0.2;
G00 U1.0 Z20.0 M09;
X100.0 Z100.0 M05;
M30;
```

NOTE Commands in ( ) identified by "*" are used only for the machine equipped with a transmission.

2.3 Various Part Programs

2.3.1 Grooving

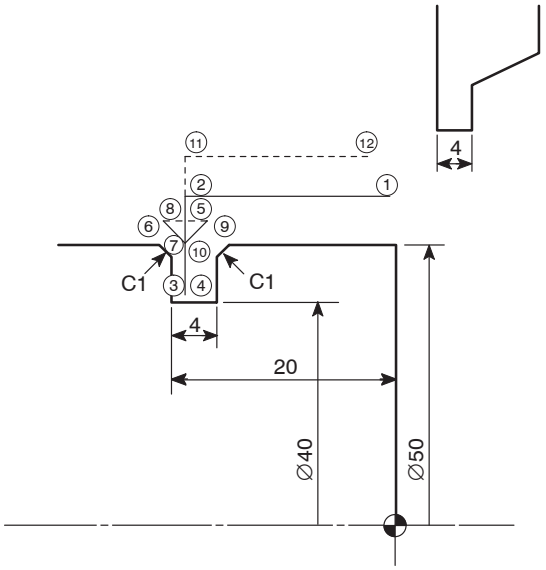


```
O0001;
N1;
G00 T0101 (M41)*;
G97 S600 M03;
① X54.0 Z20.0 M08;
② G01 Z–20.0 F1.0;
③ X40.0 F0.1;
④ G04 U0.2; . . . . . Dwell: 0.2 sec
⑤ G00 X52.0;
⑥ W–2.0;
⑦ G01 X48.0 Z–20.0;
⑧ G00 X52.0;
⑨ W2.0;
⑩ G01 X48.0 Z–20.0;
⑪ G00 X60.0;
⑫ Z20.0;
  X100.0 Z100.0 M05;
  M30;
```

NOTE

① To finish the bottom of the groove in flat, it is necessary to suspend axis movement for a period to allow the spindle to rotate approximately one turn.

In this example,

$$t = \frac{60 \text{ sec}}{600 \text{ min}^{-1}} = 0.1 \text{ sec}$$

By setting 0.1 second for a dwell period, the spindle can rotate one turn.

② The program is created assuming that tool nose R is 0.

③ Commands in ( ) identified by "*" are used only for the machine equipped with a transmission.

2.3.2 I.D. Deep Hole Drilling

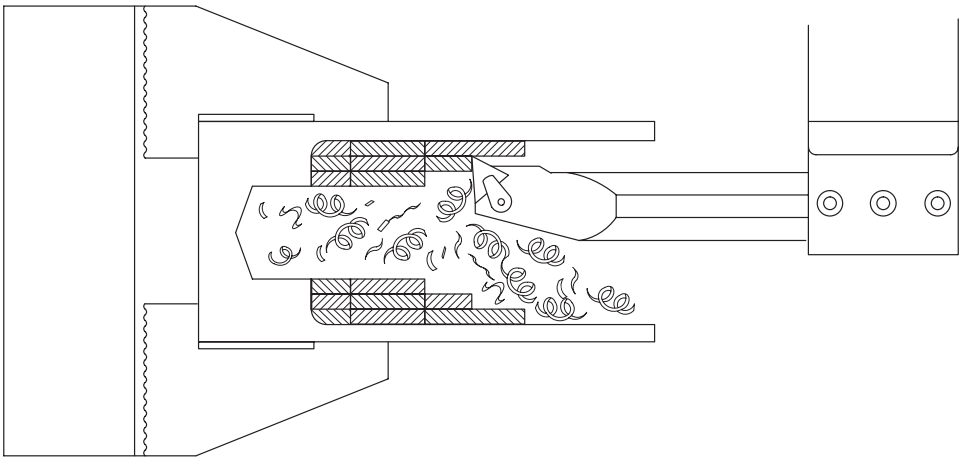

```
O0001;
N1;
G50 S500;
G00 T0101 (M41)*;
G96 S80 M03;
X55.0 Z20.0 M08;
G01 Z1.0 F3.0;
Z–50.0 F0.3;
G00 U–2.0 Z1.0;
X65.0;
G01 Z–50.0;
G00 U–2.0 Z1.0;
X74.8;
G01 Z–50.0;
G00 U–2.0 Z200.0;
X150.0;
M00;
G00 X55.0 Z10.0 M03;
Z–42.0 M08;
G01 Z–90.0 F0.3;
G00 U–2.0 Z–42.0;
X65.0;
G01 Z–90.0;
      ⋮
G00 U–2.0 Z20.0 M09;
X200.0 Z50.0;
M00;
      ⋮
Finishing
```

The tool is moved to the position where the tool nose can be easily checked, or where the chips can be discharged without being interrupted.

Rough cutting is temporarily stopped to check the tool nose and to discharge the chips.

Again specify the commands for spindle or spindle 1 rotation and for coolant discharge.

After the chips have been discharged, the finishing allowance is checked.

NOTE Commands in ( ) identified by "*" are used only for the machine equipped with a transmission.

2.4 Milling 1 (Drilling on End Face)

NOTE The following program can be used only by the MC type machines or Y-axis specification machines.

However, it cannot be used by the MC type TL series machines.

<Part drawing>

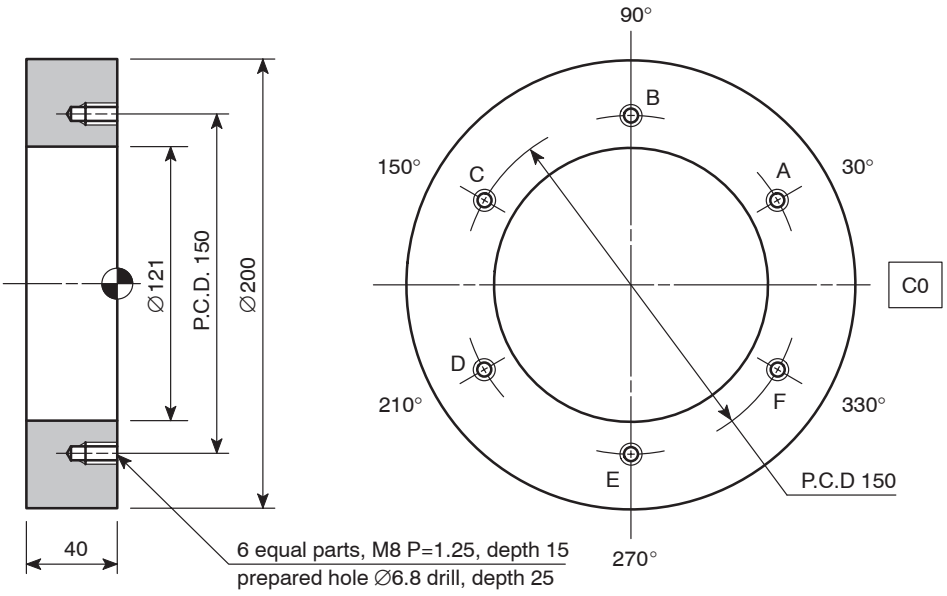

<Cutting conditions>

Process	T Code	Tool Name	Spindle Speed (min^{-1})	Feedrate (mm/min)	Tool Offset Number
N1	T0101	Center drill	2000	150	1
N2	T0202	6.8 mm dia. drill	1300	200	2
N3	T0303	M8 × P1.25 Tap	400	500	3

NOTE Length of M8 P = 1.25 tap engaging length is 5 mm.

O0001; ..... Program number

N1 (CENTER DRILL); ..... Drilling with center drilling

G98 ..... Specifying the feed per minute mode

M45; ..... Connecting the spindle or spindle 1 as the C-axis

G28 H0; ..... Returning the C-axis to the machine zero point

G00 T0101; ..... Selecting the No. 1 tool

G97 S2000 M13; ..... Starting the rotary tool spindle in the normal direction at 2000 min^{-1}

X150.0 Z30.0 C30.0; ..... Positioning at the hole machining start position at a rapid traverse rate

G83 H60.0 Z–5.0 R–27.0 F150 K6; . . . Executing the face spot drilling cycle (G83)

- H60.0 . . . . . Incremental value: Present position →B →C→D→E→F→A
- Z–5.0 . . . . . Z coordinate value of the point Z (hole bottom)
- R–27.0 . . . . . Distance and direction from the initial point to the point R
- F150 . . . . . Feedrate of 150 mm/min
- K6 . . . . . Number of repetitions: 6 times

G80; . . . . . Canceling hole machining canned cycle

G00 X200.0 Z100.0 M05; . . . . . Stopping the rotary tool spindle

M46; . . . . . Canceling the C-axis connection

G99; . . . . . Specifying the feed per revolution mode

M01; . . . . . Optional stop

N2 (6.8 DRILL); . . . . . Drilling with 6.8 mm dia. drill

G98 . . . . . Specifying the feed per minute mode

M45; . . . . . Connecting the spindle or spindle 1 as the C-axis

G28 H0; . . . . . Returning the C-axis to the machine zero point

G00 T0202; . . . . . Selecting the No. 2 tool

G97 S1300 M13; . . . . . Starting the rotary tool spindle in the normal direction at 1300 min^{-1}

X150.0 Z30.0 C30.0; . . . . . Positioning at the hole machining start position at a rapid traverse rate

G83 H60.0 Z–18.0 R–27.0 F200 K6;

. . . . . Executing the face spot drilling cycle (G83)

- H60.0 . . . . . Incremental value: Present position →B →C→D→E→F→A
- Z–18.0 . . . . . Z coordinate value of the point Z (hole bottom)
- R–27.0 . . . . . Distance and direction from the initial point to the point R
- F200 . . . . . Feedrate of 200 mm/min
- K6 . . . . . Number of repetitions: 6 times

G80; . . . . . Canceling hole machining canned cycle

G00 X200.0 Z100.0 M05; . . . . . Stopping the rotary tool spindle

M46; . . . . . Canceling the C-axis connection

G99; . . . . . Specifying the feed per revolution mode

M01; . . . . . Optional stop

N3 (M8 P = 1.25 TAP); . . . . . Tapping with M8 × P1.25 tap

G98 . . . . . Specifying the feed per minute mode

M45; . . . . . Connecting the spindle or spindle 1 as the C-axis

G28 H0; . . . . . Returning the C-axis to the machine zero point

G00 T0303; . . . . . Selecting the No. 3 tool

G97; . . . . . Specifying the constant spindle speed command

X150.0 Z30.0 C30.0; . . . . . Positioning at the hole machining start position at a rapid traverse rate

G384 Z–20.0 R5.0 F1.25 S400. D600. (E0.) M68. T2.;

. . . . . Executing the synchronized tapping cycle (G384) at point A

- Z–20.0 . . . . . Z coordinate value of the point Z (hole bottom)

  Z = − (depth of tap + tap engaging length)
  = − (15 + 5)
  = − 20 mm
- R5.0 . . . . . Z coordinate value of the point R
- F1.25 . . . . . Pitch 1.25 mm
- S400. . . . . Spindle speed for infeed: 400 min^{-1}
- D600. . . . . Spindle speed for tool retraction: 600min^{-1}
- (E0.) . . . . . In-position check valid
- M68. . . . . Spindle or spindle 1 brake clamp
- T2. . . . . Tapping direction

*

G384 C90.0; . . . . . Executing the synchronized tapping cycle (G384) at point B

G384 C150.0; . . . . . Executing the synchronized tapping cycle (G384) at point C

G384 C210.0; . . . . . Executing the synchronized tapping cycle (G384) at point D

G384 C270.0; . . . . . Executing the synchronized tapping cycle (G384) at point E

G384 C330.0; . . . . . Executing the synchronized tapping cycle (G384) at point F

G380; . . . . . Cancelling the synchronized tapping cycle (G384)

G00 X200.0 Z100.0 M05; . . . . . Stopping the rotary tool spindle

M46; . . . . . Canceling the C-axis connection

G99; . . . . . Specifying the feed per revolution mode

M30; . . . . . Program end

NOTE For the Y-axis specification TL series machine and the MC type SL-400, SL-600 and VL-55 series machines, modify the commands in the blocks indicated by "*" as shown below.

M329 S400; . . . . . Calling a synchronized tapping cycle

G84 Z–20.0 R–25.0 F500; . . . . . Executing the synchronized face tapping cycle at point A

- Z–20.0 . . . . . Z coordinate value of the point Z (hole bottom)

  Z = – (depth of tap + tap engaging length)
  = – (15 + 5)
  = – 20 mm

- R–25.0 . . . . . Distance and direction from the initial point (Z30.0) to point R (Z5.0)
- F500 . . . . . Feedrate of 500 mm/min

Feedrate
= Spindle speed (min^{-1}) × Pitch (mm)
= 400 × 1.25 = 500 mm/min

C90.0;
C150.0;
C210.0; . . . . . Executing the synchronized face tapping cycle
C270.0; (M329 G84) at points B to F
C330.0;

G80; . . . . . Canceling the synchronized face tapping cycle (M329 G84)

2.5 Milling 2

The following program can be used only by the Y-axis specification machines.

<Part drawing>

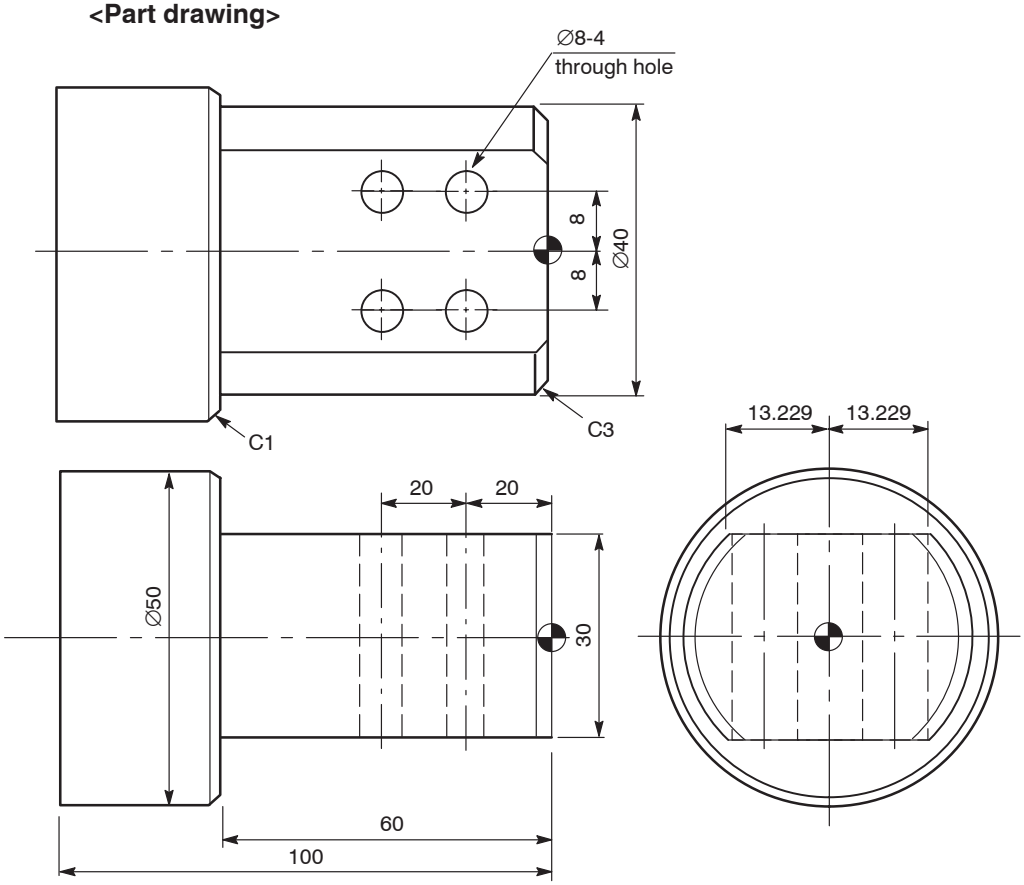

<Dimensions of blank workpiece>

Blank Workpiece		Description
Material		AISI 1045 (Carbon steel)
Dimensions (mm)	O.D.	50
	Length	101

<Chucking diagram>

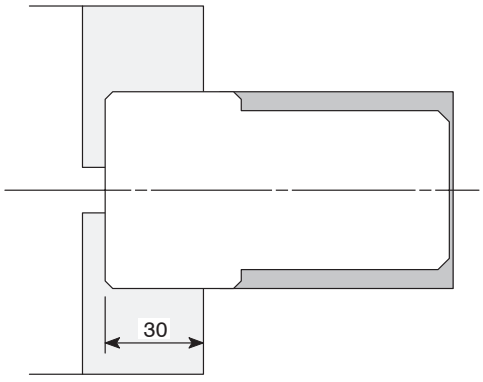

The chucking depth is 30 mm.

```
O0001;
G28 V0;
N1; . . . . . Face and O.D. rough cutting
G99 M46;
G50 S2000;
G00 T0101;
G96 S120 M03;
X55.0 Z10.0 M08;
G01 Z0.1 F1.0;
X10.0  F0.2;
X–1.6 F0.1;
G00 X45.0 W1.0;
G01 Z–59.9 F0.25;
G00 U2.0 Z1.0;
X40.3;
Z–3.468;
G00 U2.0 Z1.0;
X31.364;
G01 X40.3 Z–3.468;
Z–59.9;
X47.832;
U4.0 W–2.0;
G00 Z10.0;
G53 X0 Z0 M05;
M01;

N2; . . . . . Face and O.D. finishing
G99 M46;
G50 S2000;
G00 T0202;
G96 S200 M03;
X50.0 Z10.0 M08;
G01 Z0 F1.0;
X–0.8 F0.12;
G00 X31.532 W1.0;
G01 X40.0 Z–3.234 F0.15;
Z–60.0;
X47.532;
U4.0 W–2.0;
G00 Z10.0;
G53 X0 Z0 M05;
M01;

N3; . . . . . 13 dia. end milling (shoulder cutting)
G98 M45;
G28 U0 W0 H0;
(M321;)
G00 T0303;
C0;
M68;
G97 S500 M13;
X50.0 Z20.0 M08
Y11.0;
M98 P1000;
M69;
C180.0;
M68;
M98 P1000;
G99 G00 X50.0 Z20.0 M69;
G28 V0;
G28 U0 W0;
M05;
(M320;)
M01;

N4; . . . . . Center drilling
G98 M45;
G28 U0 W0 H0;
(M321;)
G00 T0404;
C0;
M68;
G97 S1500 M13;
X50.0 Z20.0 M08;
G01 X40.0 Z–20.0 F750;
G87 X24.0 Y8.0 R–7.0 F75;
W–20.0;
Y–8.0;
W20.0;
G99 G00 X50.0 Z20.0 M69;
G28 V0;
G28 U0 W0;
M05;
(M320;)
M01;

N5; . . . . . 8 dia. drilling
G98 M45;
G28 U0 W0 H0;
(M321;)
G00 T0505;
C0;
M68;
G97 S1200 M13;
X50.0 Z20.0 M08;
G01 X40.0 Z–20.0 F600;
G87 X–38.0 Y8.0 R–7.0 Q4000 F144;
W–20.0 Q4000;
Y–8.0 Q4000;
W20.0 Q4000;
G99 G00 X50.0 Z20.0 M09;
G28 V0;
G28 U0 W0;
M05;
(M320;)
G00 T0100 M69;
M46;
M30;
```

NOTE Commands in ( ) should be specified only for the Y-axis specification TL series machines.

```
O1000; . . . . .  Sub-program (13 dia. end milling)
G01 X34.0 Z10.0 F500;
Z–53.5 F75;
Y0;
Z10.0;
Y–11.0;
Z–53.5;
Y20.0;
G00 X35.0 Z10.0;
Y9.0;
G01 X30.0 F500;
Z–53.5 F75;
Y–3.0;
Z10.0;
Y–15.0;
Z–53.5;
Y20.0;
G00 X50.0 Z20.0;
Y11.0;
M99;
```

APPENDIX

This appendix describes the interlock functions that ensure safe operation.
(Tailstock specification)

APPENDIX 1 Center-Work Programming with Safety

Primary requirement:

The tailstock spindle interlock switch must be valid. In this state, cycle start is disabled if the tailstock spindle is “IN”.

<For short workpieces>

Definition of short workpieces: Workpieces that can be securely supported by only the chuck if the tailstock spindle is retracted to its “IN” position.

EXAMPLE

```
O___;
_____________;
_____________;
Machining program ;
_____________;
M05;      Spindle stop
M26;      Tailstock spindle “IN”
M30;
(Manual operation)
Opening the front door
Supporting the workpiece
Unclamping the chuck (by footswitch)
Removing the workpiece
```

(Safety)

By inserting the M26 (tailstock spindle IN) command in the program, after completion of the program, starting the automatic operation is prevented even if the ST (ST) switch is pressed by mistake.

This is due to the tailstock spindle interlock function.

1) Automatic operation

– Spindle stop (M05)

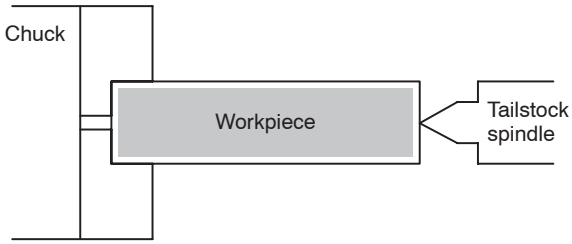

– Tailstock spindle IN (M26)

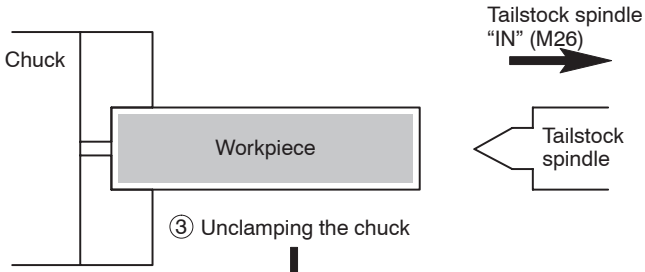

2) Manual operation

① Opening the font door

② Supporting the workpiece

③ Unclamping the chuck (by footswitch)

④ Removing the workpiece

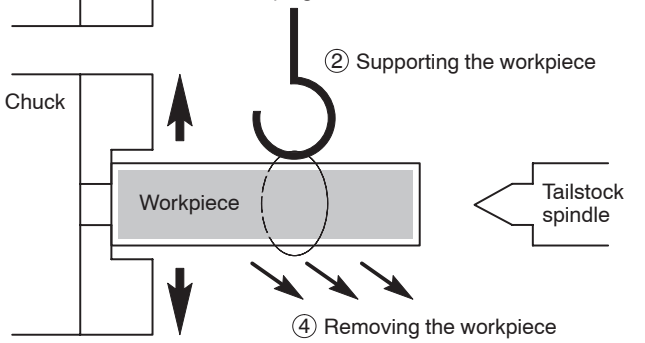

<For long workpiece>

Definition of long workpieces: Workpieces that cannot be securely supported by only the chuck. Secure support of such workpieces requires the use of the center (tailstock spindle) or other proper means.

EXAMPLE

```
O___;
_____;
_____;
Machining program ;
_____;
_____;
M05;      Spindle stop
M11;      Chuck unclamp
M30;
(Manual operation)
Opening the front door
Supporting the workpiece
Pressing the (TSI) switch to
retract the tailstock spindle into the
tailstock body
Removing the workpiece
```

(Safety)

In this program, the M11 (chuck unclamp) command, to be executed after the spindle stops, unclamps the chuck. If the (ST) switch or the (NOR) or (REV) switch is pressed by mistake, the cycle start or the spindle rotation will not be enabled, due to the chuck interlock function.

(If a hydraulic chuck is not used, the internal signal is set to the chuck unclamp state so that the chuck interlock function is made valid. In such a case, if the footswitch is stepped on to set the internal signal to the chuck clamp state, both the cycle start and spindle rotation start are enabled.)

1) Automatic operation
   – Spindle stop (M05)

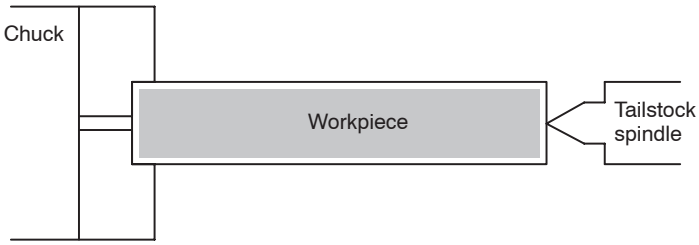

2) Automatic operation
   – Chuck unclamp (M11)

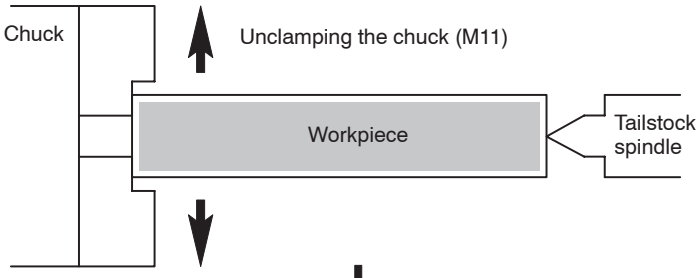

3) Manual operation
   ① Opening the font door
   ② Supporting the workpiece
   ③ Retracting the tailstock spindle “IN” by pressing the (TSI) switch.
   ④ Removing the workpiece

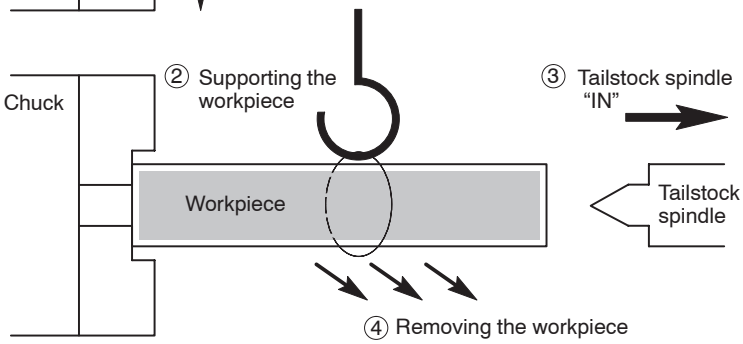

Page

A

Absolute Commands A–20
Address A–10
Alarm Table J–20
Approach → Chamfering → O.D. cutting (Tool nose radius: 0.4 mm) Chuck work E–31
Approach → Facing (Tool nose radius: 0.4 mm) E–30
Approach → O.D. cutting (Tool nose radius: 0.4 mm) Chuck work E–30
Arc → O.D. → Arc cutting with an O.D. cutting tool E–24
Automatic Door Open/Close [M85, M86] C–63
Automatic Thread Cutting Cycle [G76] H–31
Automatic Tool Nose Radius Offset [G40, G41, G42] B–28
Axis Control and Direction A–12

B

Bar Feeder Operation, Bar Feed OFF, Bar Stock Change [M70, M483, M482] C–54
Basic Pattern of Program A–27
Basic Programs E–20
Block A–11
Both-Center-Work Programming A–29

C

C-axis Connection and Cancel [M45, M245, M46] C–46
Calculating Offset Data F–3
Calculating the Coordinate Values to be Specified in a Program F–18
Calculating the Depth of Cut for the First Path when the Number of Thread Cutting Paths is Given H–36
Calculating the direction of wall (workpiece shape) G–10
Calculating the Number of Thread Cutting Paths when the Depth of Cut for the First Path is Given H–36
Calculating the wall direction (blank workpiece shape) E–15
Cancel Mode, Technical Terms Used in the Explanation of the Automatic Tool Nose Radius Offset Function E–12
Cancel Mode, Technical Terms Used in the Explanation of the Cutter Radius Offset Function G–8
Cautions for Creating a Program A–30
Cautions on Programming Tapping Using G32 . . . . . B–50
Cautions on Programming Using G84 and G88 . . . . . I–75
Cautions on the G76 Automatic Thread Cutting Cycle H–34
Cautions on Using the G71, G72, and G73 Cycles H–18
Center work (Tool nose radius: 0.4 mm) E–27

Page

C

Center-Work Programming, Basic Pattern of Program A–28
Center-Work Programming with Safety APPENDIX–1
Chamfering (1) (Tool nose radius: 0.4 mm) E–28
Chamfering (2) (Tool nose radius: 0.4 mm) E–28
Chamfering (3) (Tool nose radius: 0.4 mm) E–29
Chamfering (4) (Tool nose radius: 0.4 mm) E–29
Chamfering and I.D. cutting with an I.D. cutting tool E–23
Chamfering ON/OFF [M23, M24] C–30
Check Items A–4
Chuck Clamp/Unclamp [M10, M210, M11, M211] C–33
Chuck work (1) (Tool nose radius: 0.4 mm) E–26
Chuck work (2) (Tool nose radius: 0.4 mm) E–26
Chuck-Work Programming, Basic Pattern of Program A–27
Chuck-Work Programming (1), Example Programs K–3
Chuck-Work Programming (2), Example Programs K–18
CL Series, M Code List C–15
CL Series, Movement along the Controlled Axes A–16
Closed-loop Cutting Cycle [G73] H–14
Concave Arc F–17
Conditions for Use of the Automatic Tool Nose Radius Offset Function E–4
Controlling Spindle Speed at Constant Speed [G97] B–19
Controlling Spindle Speed to Maintain Surface Speed Constant [G96] B–17
Convex Arc F–17
Coolant Discharge ON/OFF [M08, M09] C–28
Counting the Tool Life J–13
Cutter Radius Offset [G40, G41, G42] B–30
Cylindrical Interpolation [G07.1 (G107)] B–76

D

Data A–10
Dwell Command, Cautions on Programming Tapping Using G32 . . . . . B–50
Dwell Command, Cautions on Programming Using G84 and G88 . . . . . I–75

E

Example Program, CUTTER RADIUS OFFSET G–15
Example Program, Offset in Circular Interpolation F–19
Example Programs, AUTOMATIC TOOL NOSE RADIUS OFFSET E–20
Example Programs, EXAMPLE PROGRAMS K–2
Example Programs, Offset for Taper Cutting and Chamfering F–9

Page

E

Expressing Axis Movement in Programming A–17

F

F Function D–20
Face Boring Cycle [G85] I–41
Face Cut-off, Grooving Cycle and Deep Hole Drilling Cycle [G74] H–23
Face Deep Hole Drilling Cycle [G83] I–22
Face Drilling Cycle [G83] I–18
Face High-speed Deep Hole Drilling Cycle [G83] I–18
Face Hole Machining Canned Cycle I–9
Face Spot Drilling Cycle [G83] I–26
Face Spot Drilling Cycle (Dwell) [G83] I–28
Face Tapping Cycle [G84] I–32
Facing → Chamfering → O.D. cutting (Tool nose radius: 0.4 mm) E–31
Facing (1) (Tool nose radius: 0.4 mm) E–27
Facing (2) (Tool nose radius: 0.4 mm) E–27
Facing (3) (Tool nose radius: 0.4 mm) E–28
Facing and O.D. cutting with in O.D. cutting tool E–21
Feed per Minute (G98 F_) D–23
Feed per Spindle Revolution (G99 F_) D–20
Feedrate for Finishing D–24
Feedrate Override Cancel OFF/ON [M48, M49] C–50
Finishing Cycle [G70] H–21
1st process, Center-Work Programming (2) K–18
Flow of Operation A–3
Flow until the Product is Completed A–3

G

G Code List B–1
G00 Positioning the Cutting Tool at a Rapid Traverse Rate B–5
G01 Moving the Cutting Tool Along a Straight Path at a Cutting Feedrate B–10
G02, G03 Moving the Cutting Tool Along Arcs at a Cutting Feedrate B–12
G04 Suspending Program Execution (Dwell) B–22
G07.1 (G107) Cylindrical Interpolation B–76
G12.1 (G112), G13.1 (G113) Notching (Polar Coordinate Interpolation) B–82
G22, G23 Setting Barrier to Define the Tool Entry Inhibited Zone B–63
G28 Returning the Axes to Machine Zero Automatically B–66
G32 Tapping (On the Center of Spindle) B–49

Page

G

G32, G92 Thread Cutting
(Continuous Thread Cutting and Thread Cutting Cycle) B–33
G38 Workpiece Pushing Check B–73
G40, G41, G42 Automatic Tool Nose Radius Offset B–28
G40, G41, G42 Cutter Radius Offset B–30
G50 Setting the Spindle Speed Limit B–14
G53 Selecting the Machine Coordinate System B–68
G54 - G59 Setting a Work Coordinate System B–70
G65 P9020/G65 P9021
Workpiece Transfer Macro Program (MSD-501II) . . . . . APP. B–4
G65 P9022 Workpiece Ejection Macro Program (MSD-501II) . . . . . APP. B–12
G70 Finishing Cycle H–21
G70 - G76 Multiple Repetitive Cycle B–56
G71 O.D./I.D. Rough Cutting Cycle H–4
G72 Rough Facing Cycle H–9
G73 Closed-loop Cutting Cycle H–14
G74 Face Cut-off, Grooving Cycle and Deep Hole Drilling Cycle H–23
G75 O.D./I.D. Grooving Cycle, Cut-off Cycle H–27
G76 Automatic Thread Cutting Cycle H–31
G80 Hole Machining Canned Cycle Cancel I–16
G80, G83 - G85, G87 - G89 Hole Machining Canned Cycles B–58
G83 Face Deep Hole Drilling Cycle I–22
G83 Face Drilling Cycle I–18
G83 Face High-speed Deep Hole Drilling Cycle I–18
G83 Face Spot Drilling Cycle I–26
G83 Face Spot Drilling Cycle (Dwell) I–28
G84 Face Tapping Cycle I–32
G85 Face Boring Cycle I–41
G87 Side Deep Hole Drilling Cycle I–48
G87 Side Drilling Cycle I–44
G87 Side High-speed Deep Hole Drilling Cycle I–44
G87 Side Spot Drilling Cycle I–52
G87 Side Spot Drilling Cycle (Dwell) I–55
G88 Side Tapping Cycle I–58
G89 Side Boring Cycle I–66
G90, G94 O.D./I.D. Cutting Cycle and Face Cutting Cycle B–53
G96 Controlling Spindle Speed to Maintain Surface Speed Constant B–17
G97 Controlling Spindle Speed at Constant Speed B–19
G98, G99 Setting Feedrate Units B–24

Page

G

G384, G380 Synchronized Tapping Cycle I–69
G479 Tailstock Connect B–85
General, AUTOMATIC TOOL NOSE RADIUS OFFSET E–1
General, CUTTER RADIUS OFFSET G–1
General, HOLE MACHINING CANNED CYCLE I–1
General, MANUAL TOOL NOSE RADIUS OFFSET F–1
General, MULTIPLE REPETITIVE CYCLES H–1
General, TOOL LIFE MANAGEMENT B FUNCTION (OPTION) J–1
General Cautions on the Automatic Tool Nose Radius Offset Function E–14
General Cautions on the Offset Function G–9
Grooving K–28
Group Command J–12

H

Hole Machining Canned Cycle Cancel [G80] I–16
Hole Machining Canned Cycles [G80, G83 - G85, G87 - G89] B–58

I

I.D. Deep Hole Drilling K–29
If a Wall Lies at the End of Cutting,
General Cautions on the Automatic Tool Nose Radius Offset Function E–14
If a Wall Lies at the End of Cutting,
General Cautions on the Offset Function G–9
Imaginary Tool Tip E–5
In-position Check Valid and In-position Check Invalid [M28, M29] C–78
Incremental Commands A–22
Infeed Mode H–34
Inputting a Decimal Point A–31
Inputting the Program to the Machine A–2

J

JIS Specification and Reverse JIS Specification A–33

L

Life Count M Code J–12
LL Series, Movement along the Controlled Axes A–15
LL-7, 8, M Code List C–12

M

M Code List C–1
M00, M01 Program Stop and Optional Stop C–18
M02, M30 Program End, Program End and Rewind C–21

Page

M

M03, M203, M04, M204, M05 Spindle Start and Stop C–23
M08, M09 Coolant Discharge ON/OFF C–28
M10, M210, M11, M211 Chuck Clamp/Unclamp C–33
M13, M14, M05 Start and Stop of Rotary Tool Spindle Rotation C–26
M23, M24 Chamfering ON/OFF C–30
M25, M26 Tailstock Spindle IN/OUT C–37
M28, M29 In-positon Check Valid and In-position Check Invalid C–78
M34, M35, M36 Synchronized Operation ON/OFF C–41
M39 Rotary Tool Joint Check C–80
M40 - M44 Selecting Spindle Speed Range C–76
M45, M245, M46 C-axis Connection and Cancel C–46
M47 Workpiece Ejector OUT C–48
M48, M49 Feedrate Override Cancel OFF/ON C–50
M68, M268, M69 Spindle Brake Clamp and Unclamp C–52
M70, M483, M482 Bar Feeder Operation, Bar Feed OFF,
Bar Stock Change C–54
M73, M74 Parts Catcher IN/OUT C–57
M80 Workpiece Cut-off Detection C–61
M85, M86 Automatic Door Open/Close C–63
M89 Work Counter, Total Counter C–65
M90, M290, M91, M291 Simultaneous Spindle/
Rotary Tool Spindle Operation Mode ON/OFF C–72
M98, M99 Sub-program Call and Sub-program End C–68
M320, M321 Y-axis Lock/Unlock C–74
M329 G84 Synchronized Face Tapping Cycle I–36
M329 G88 Synchronized Side Tapping Cycle I–62
M432 Parts Catcher Cycle Function C–59
Milling 1 (Drilling on End Face), Example Programs K–30
Milling 2, Example Programs K–34
Movement along the Controlled Axes A–12
Moving the Cutting Tool Along a Straight Path
at a Cutting Feedrate [G01] B–10
Moving the Cutting Tool Along Arcs at a Cutting Feedrate [G02, G03] B–12
Multiple M Code Function ..... APP. C–1
Multiple Repetitive Cycle [G70 - G76] B–56

Page

N

New Tool Selection Flag J–15
New Tool Selection Flag and Tool Life Expired Flag J–15
Notching (Polar Coordinate Interpolation)
[G12.1 (G112), G13.1 (G113)] B–82
Number of Repetitions “K” I–6

O

O.D. cutting including arcs F–19
O.D. cutting with an O.D. cutting tool E–20
O.D./I.D. Cutting Cycle and Face Cutting Cycle [G90, G94] B–53
O.D./I.D. Grooving Cycle, Cut-off Cycle [G75] H–27
O.D./I.D. Rough Cutting Cycle [G71] H–4
Offset Data Table F–12
Offset Direction (⇦) and Calculation of Coordinate Values F–5
Offset for Taper Cutting and Chamfering F–2
Offset in Circular Interpolation F–17
Offset Method F–2
Offset Mode, Technical Terms Used in the Explanation
of the Automatic Tool Nose Radius Offset Function E–11
Offset Mode, Technical Terms Used in the Explanation
of the Cutter Radius Offset Function G–6
Operation Methods in Hole Machining Canned Cycles (G Codes) I–9
Overcut in the Automatic Tool Nose Radius Offset Mode E–17
Overcut in the Cutter Radius Offset Mode G–11

P

Parameters J–21
Part Program A–9
Parts Catcher Cycle Function [M432] C–59
Parts Catcher IN/OUT [M73, M74] C–57
Positioning the Cutting Tool at a Rapid Traverse Rate [G00] B–5
Positive (+) and Negative (–) Designation
for Cutter Radius Offset Amount and Tool Paths G–11
Precautions on Using the Tapper,
Cautions on Programming Tapping Using G32 ..... B–50
Precautions on Using the Tapper,
Cautions on Programming Using G84 and G88 ..... I–75
Program End, Program End and Rewind [M02, M30] C–21
Program Number, Cautions for Creating a Program A–30
Program Number, Terms for Programming A–8
Program Stop and Optional Stop [M00, M01] C–18

Page

P

Programming for a Sample Workpiece, Example Programs E–33
Programming for a Sample Workpiece,
MANUAL TOOL NOSE RADIUS OFFSET F–21
Programming positioning using a work coordinate system
(G54 to G59) B–70
Programming Steps K–1
Programming using “G65 P9020” . . . . . APP. B–9
Programming using “G65 P9021” . . . . . APP. B–10
Programming using “G65 P9022” . . . . . APP. B–13
Programming using G00 . . . . . B–8
Programming using G01 . . . . . B–11
Programming using G02 or G03 . . . . . B–13
Programming using G04 . . . . . B–23
Programming using G07.1 (G107) B–78
Programming using G09 . . . . . C–78
Programming using G12.1 (G112) and G13.1 (G113) B–84
Programming using G22 and G23 . . . . . B–65
Programming using G28 . . . . . B–67
Programming using G32 (Scrolled thread cutting) B–46
Programming using G32 (Tapping) B–52
Programming using G32 or G92 (Straight thread cutting) B–41
Programming using G32 or G92 (Tapered thread cutting (R2 1/2)) B–44
Programming using G38 . . . . . B–74
Programming using G40, G41, and G42,
CUTTER RADIUS OFFSET G–15
Programming using G40, G41, and G42, G FUNCTIONS B–29
Programming using G50 (Setting the spindle speed limit) B–16
Programming using G50 S_ D–17
Programming using G53 . . . . . B–69
Programming using G71, Multiple Repetitive Cycle B–57
Programming using G71, O.D./I.D. Rough Cutting Cycle H–7
Programming using G72 . . . . . H–12
Programming using G73 . . . . . H–16
Programming using G74 (Deep hole drilling) H–26
Programming using G74 (Face cut-off cycle) H–25
Programming using G75 (Cut-off cycle) H–30
Programming using G75 (O.D./I.D. grooving cycle) H–29
Programming using G76 . . . . . H–35
Programming using G80 . . . . . I–17

Page

P

Programming using G83 (Face deep hole drilling cycle) I–24
Programming using G83 (Face high-speed deep hole drilling cycle) I–20
Programming using G83 (Face spot drilling cycle) I–27
Programming using G83 (Face spot drilling cycle (dwell)) I–30
Programming using G84 (Face tapping cycle) I–34
Programming using G85 (Face boring cycle) I–42
Programming using G87 (Side deep hole drilling cycle) I–50
Programming using G87 (Side high-speed deep hole drilling cycle) I–46
Programming using G87 (Side spot drilling cycle) I–53
Programming using G87 (Side spot drilling cycle (dwell)) I–56
Programming using G88 (Side tapping cycle) I–60
Programming using G89 (Side boring cycle) I–67
Programming using G96 . . . . . B–18
Programming using G96 S_ D–15
Programming using G97 . . . . . B–21
Programming using G97 S_ D–14
Programming using G98 . . . . . B–26
Programming using G99 . . . . . B–25
Programming using G99 F_ D–22
Programming using G384 and G380 . . . . . I–73
Programming using G479 . . . . . B–86
Programming using M00 or M01 . . . . . C–20
Programming using M02 or M30 . . . . . C–22
Programming using M03, M04, and M05 . . . . . C–24
Programming using M08 and M09 . . . . . C–29
Programming using M10 and M11 . . . . . C–34
Programming using M13 or M14 . . . . . C–27
Programming using M23 or M24 . . . . . C–31
Programming using M25 and M26 (1) C–38
Programming using M25 and M26 (2) C–39
Programming using M34, M35, and M36 (1) C–42
Programming using M34, M35, and M36 (2) C–44
Programming using M40 to M44 . . . . . C–77
Programming using M45 and M46 . . . . . C–47
Programming using M47 . . . . . C–49
Programming using M48 and M49 . . . . . C–51
Programming using M68 and M69 . . . . . C–53
Programming using M70 . . . . . C–55

Page

P

Programming using M73 and M74 . . . . . C–58
Programming using M80 . . . . . C–62
Programming using M85 and M86 . . . . . C–64
Programming using M89 (1) C–66
Programming using M89 (2) C–67
Programming using M90 and M91 . . . . . C–73
Programming using M98 and M99 (1) C–70
Programming using M98 and M99 (2) C–70
Programming using M99 . . . . . C–71
Programming using M210 or M211 . . . . . C–36
Programming using M320 and M321 . . . . . C–75
Programming using M329 G84 (Synchronized face tapping cycle) I–39
Programming using M329 G88 (Synchronized side tapping cycle) I–64
Programming using M432 . . . . . C–60

R

Reading the PMC Address J–18
Reading the Tool Life Management Information J–16
Recommended Example Programs E–30
Registering the Data Using External I/O Device
(F-25D, F-30, F-200D) J–9
Relationship of the Cutting Speed, Diameter, and Spindle Speed D–18
Requirement for Using the Cutter Radius Offset Function G–3
Returning the Axes to Machine Zero Automatically [G28] B–66
Role of Decimal Point A–32
Rotary Tool Joint Check [M39] C–80
Rough Facing Cycle [G72] H–9

S

S Function D–13
2nd process, Center-Work Programming (2) K–23
Selecting Spindle Speed Range [M40 - M44] C–76
Selecting the Machine Coordinate System [G53] B–68
Sequence Number A–9
Setting a Work Coordinate System [G54 - G49] B–70
Setting Barrier to Define the Tool Entry Inhibited Zone [G22, G23] B–63
Setting Feedrate Units [G98, G99] B–24
Setting the Spindle Speed Limit [G50] B–14
Setting the tool life data, Setting the Tool Life Data in Program J–8

Page

S

Setting the Tool Life Data,
TOOL LIFE MANAGEMENT B FUNCTION (OPTION) J–2
Setting the Tool Life Data by Manual Operation J–2
Setting the Tool Life Data in Program J–8
Setting Tool Nose Radius E–8
Side Boring Cycle [G89] I–66
Side Deep Hole Drilling Cycle [G87] I–48
Side Drilling Cycle [G87] I–44
Side High-speed Deep Hole Drilling Cycle [G87] I–44
Side Hole Machining Canned Cycle I–11
Side Spot Drilling Cycle [G87] I–52
Side Spot Drilling Cycle (Dwell) [G87] I–55
Side Tapping Cycle [G88] I–58
Signs and Symbols A–30
Simultaneous Spindle/Rotary Tool Spindle Operation Mode ON/OFF
[M90, M290, M91, M291] C–72
Skip Command J–14
SL, TL Series, Movement along the Controlled Axes A–12
SL, VL, TL Series, M Code List C–1
SL-S Series, M Code List C–7
SL-S Series, Movement along the Controlled Axes A–13
Space between the Words in the Program A–30
Specification in Machining Program J–12
Specifying the absolute commands (1) A–20
Specifying the absolute commands (2) A–21
Specifying the Cutting Conditions A–25
Specifying the Cutting Speed (G96 S_) D–15
Specifying the Dimensions A–20
Specifying the incremental commands (1) A–22
Specifying the incremental commands (2) A–23
Specifying the Offset Direction E–8
Specifying the Spindle Speed (G97 S_) D–13
Specifying the Spindle Speed Limit for Automatic Operation
(G50 S_) D–16
Specifying the tool geometry offset D–4
Specifying the tool numbers D–3
Specifying the tool wear offset (1) D–6
Specifying the tool wear offset (2)
(Adjusting dimensions at two or more places) D–8

Page

S

Specifying the tool wear offset (3) (Adjusting a taper angle) D–9
Specifying the tool wear offset (4) (Adjusting the groove width) D–11
Spindle Brake Clamp and Unclamp [M68, M268, M69] C–52
Spindle Start and Stop [M03, M203, M04, M204, M05] C–23
Start and Stop of Rotary Tool Spindle Rotation [M13, M14, M05] C–26
Start-up, Technical Terms Used in the Explanation of the Automatic Tool Nose Radius Offset Function E–10
Start-up, Technical Terms Used in the Explanation of the Cutter Radius Offset Function G–5
State Flag Clear Command J–14
Sub-program Call and Sub-program End [M98, M99] C–68
Summary, M FUNCTION C–81
Summary, Specifying the Dimension A–24
Summary, Terms for Programming A–11
Suspending Program Execution (Dwell) [G04] B–22
Synchronized Face Tapping Cycle [M329 G84] I–36
Synchronized Operation ON/OFF [M34, M35, M36] C–41
Synchronized Side Tapping Cycle [M329 G88] I–62
Synchronized Tapping Cycle [G384, G380] I–69

T

T Command J–12
T Function D–1
Table of Maximum Cutting Feedrate D–26
Table of Rapid Traverse Rates D–25
Tailstock Connect [G479] B–85
Tailstock Spindle IN/OUT [M25, M26] C–37
Tapping (On the Center of Spindle) [G32] B–49
Technical Terms Used in the Explanation of the Automatic Tool Nose Radius Offset Function E–9
Technical Terms Used in the Explanation of the Cutter Radius Offset Function G–4
Terms for Programming A–8
The Relationship between Depth of Cut for the First Path and the Number of Thread Cutting Paths to be Generated (Fixed Metal Removal Rate and Straight Feed along the Thread Face) H–36
Thread Cutting (Continuous Thread Cutting and Thread Cutting Cycle) [G32, G92] B–33

Page

T

To Finish Tapping at Correct Depth in Blind Hole, Cautions on Programming Tapping Using G32 . . . . . B–51
To Finish Tapping at Correct Depth in Blind Hole, Cautions on Programming Using G84 and G88 . . . . . I–76
Tool Detail Screen J–5
Tool Geometry Offset D–4
Tool Life Expired Flag J–15
Tool Life Management Screen J–2
Tool Numbers D–3
Tool Wear Offset D–6

U

Use a decimal point carefully A–32
Using T function D–2

V

Various Part Programs K–28
VL Series, Movement aolng the Controlled Axes A–14

W

What is “Creating a Program”? A–2
What is a Program? A–1
What is Required of Programmers? A–1
Word A–11
Work Coordinate System . . . . . APP. B–2
Work Counter, Total Counter [M89] C–65
Workpiece Cut-off Detection [M80] C–61
Workpiece Ejection Macro Program (MSD-501II) [G65 P9022] . . . . . APP. B–12
Workpiece Ejector OUT [M47] C–48
Workpiece Materials and Cutting Speeds D–19
Workpiece Pushing Check [G38] B–73
Workpiece Transfer . . . . . APP. B–1
Workpiece transfer commands (work coordinate system) . . . . . APP. B–3
Workpiece Transfer Macro Program (MSD-501II) [G65 P9020/G65 P9021] . . . . . APP. B–4

Y

Y-axis Lock/Unlock [M320, M321] C–74

Comment Form

Date: _____

To improve this manual, we invite you to make comments on any insufficient description or errors in this manual. We want to know how you think we can make this manual better. Please restrict your comments to those concerning this manual only. Comments can also be submitted using the company website at http://www.moriseiki.com.

Name of Manual	PROGRAMMING MANUAL
Number of Revisions	PM-NLTMSC518-I1EN (2008.1)

Name		**Company**	
Department		**Telephone**	
Address			

Chapter	Page	Line	Comments/Requests

For Mori Seiki's Use - Do not write below this line.		
Description	**Reception No.**	**Received by**

MORI SEIKI

http://www.moriseiki.com

MORI SEIKI CO., LTD.

Nagoya Head Office

- 2-35-16 Meieki, Nakamura-ku, Nagoya City, Aichi 450-0002, Japan
  Phone: (81) -52-587-1811 Fax.: (81) -52-587-1818

Nara Campus No.1 Plant

- 362 Idono-cho, Yamato-Koriyama City, Nara 639-1183, Japan
  Phone: (81) -743-53-1121

Nara Campus No.2 Plant

- 106 Kita Koriyama-cho, Yamato-Koriyama City, Nara 639-1160, Japan
  Phone: (81) -743-53-1125

Iga Campus

- 201 Midai, Iga City, Mie 519-1414, Japan
  Phone: (81) -595-45-4151

Chiba Campus

- 488-19 Suzumi-cho, Funabashi City, Chiba 274-0052, Japan
  Phone: (81) -47-410-8800

MORI SEIKI U.S.A., INC.

Head Office

- 5655 Meadowbrook Drive, Rolling Meadows, Illinois 60008
  Phone: (1)-847-593-5400 Fax.: (1)-847-593-5433

Technical Centers

- **Chicago, Dallas, Los Angeles, Detroit, Cincinnati, Boston, New Jersey**

Representative Office

- **Charlotte**

MORI SEIKI MEXICO, S.A. DE C.V.

Head Office & Technical Center

- Montecito 38 Piso 12-38 Col. Napoles 03810 México D.F.
  Phone: (52)-55-9000-3276 Fax.: (52)- 55-9000-3279

MORI SEIKI BRASIL LTDA.

Head Office & Technical Center

- Rua República do Iraque, 1432 2 and, Campo Belo 04611-002 São Paulo - SP, Brasil
  Phone: (55)-11-5543-1762 Fax.: (55)-11-5543-1948

MORI SEIKI GmbH

Head Office

- Antoniusstrasse 14, 73249 Wernau, Germany
  Phone: (49)-7153-934-0 Fax.: (49)-7153-934-220

Technical Centers

- **Stuttgart, Frankfurt, München, Hamburg, Düsseldorf**

MORI SEIKI Moscow LLC

Head Office & Technical Center

- Krasnopresnenskaya Naberezhnaya 18, Naberezhnaya Tower Block "B", Floor 16, Moscow, 123317, Russia
  Phone: (7)-495-956-9677 Fax.: (7)-495-956-9640

MORI SEIKI (U.K.) LTD.

Head Office

- 202 Bedford Avenue, Slough SL1 4RY, England
  Phone: (44)-870-240-9500 Fax.: (44)-870-240-9538

Technical Centers

- **London, Birmingham**

MORI SEIKI FRANCE S.A.S.

Head Office & Technical Center

- Parc du Moulin, 1 Rue du Noyer BP 19326 Roissy en France 95705 Roissy CDG Cedex, France
  Phone: (33)-1-39-94-68-00 Fax.: (33)-1-39-94-68-59

Technical Centers

- **Toulouse, MS SYFRAMO S.A.S., Prague**

MORI SEIKI ITALIANA S.R.L.

Head Office & Technical Center

- Via Riccardo Lombardi N. 10, 20153 Milano, Italy
  Phone: (39)-02-4894921 Fax.: (39)-02-48914448

MORI SEIKI ESPAÑA S.A.

Head Office & Technical Center

- Calle de la Electrónica, Bloque B, Nave 9 Poligono Industrial "La Ferreria" 08110 Montcada I Reixac (Barcelona), Spain
  Phone: (34)-935-75-36-46 Fax.: (34)-935-75-08-47

MORI SEIKI Istanbul Makina San. ve Tic. Ltd. Sti.

Head Office

- Abdi Ipekci Caddesi No:129 Kat: 5, 34040 Bayrampasa Istanbul, Turkey
  Phone: (90)-212-613-4141 Fax.: (90)-212-612-4603

MORI SEIKI SINGAPORE PTE LTD.

Head Office & Technical Center

- 3 Toh Guan Road East, Singapore 608835
  Phone: (65)-6560-5011 Fax.: (65)-6567-6234

Technical Center

- **MALAYSIA BRANCH**

MORI SEIKI THAILAND CO., LTD.

Head Office

- 1/2 Bangnathani Building 1st Floor A1, Soi Bangna-Trad 34, Kwaeng Bangna, Khet Bangna, Bangkok 10260, Thailand
  Phone: (66)-2-361-3700-5 Fax.: (66)-2-361-3706

MORI SEIKI TAIWAN CO., LTD.

Head Office & Technical Center

- No. 8, Kong 8th Road, Linkou No. 2 Industrial District, Linkou Hsiang, Taipei Hsien, Taiwan, R.O.C.
  Phone: (886)-2-2603-1701 Fax.: (886)-2-2603-1706

MORI SEIKI HONG KONG LIMITED

Head Office & Technical Center

- Unit 08, 23/F., The Metropolis Office Tower, 10 Metropolis Drive, Hung Hom, Kowloon, Hong Kong
  Phone: (852)-2757-8910 Fax.: (852)-2757-7839

MORI SEIKI (SHANGHAI) CO., LTD.

Head Office

- Room 4301, 4307, Maxdo Center, No.8 Xing Yi Road, HongQiao Development Zone, Shanghai 200336, China
  Phone: (86)-21-5208-0270 Fax.: (86)-21-5208-0273

Technical Center

- **Shanghai, Beijing, Tianjin, Dalian, Shenzhen, Chongqing, Guangzhou, Suzhou, Wuhan**

MORI SEIKI KOREA CO., LTD.

Head Office & Technical Center

- A-101, 2, SK Twin Tech Tower, 345-9 Kasan-dong, Kumcheon-Ku, Seoul, Korea
  Phone: (82)-2-862-0925 Fax.: (82)-2-862-0928

PT. MORI SEIKI INDONESIA

Head Office & Technical Center

- Komplek Gading Bukit Indah Blok M/01, Jl. Bukit Gading Raya, Kalapa Gading, Jakarta Utara, 14240 Indonesia
  Phone: (62)-21-453-1199 Fax.: (62)-21-4585-7414

Mori Seiki India Private Limited;

Head Office

- 4th Floor DLF Square Jarcanda Marg, M-Block, DLF City, Phase-II, Gurgaon 122002, India
  Phone: (91)-124-4389400 Fax.: (91)-124-4389409

MORI SEIKI AUSTRALIA PTY LTD.

Head Office

- 6/6 Garden Road Clayton VIC 3168, Australia
  Phone: (61)-3-8545-0900 Fax.: (61)-3-9561-4999

Technical Centers

- **Melbourne, Sydney**

The export of this product is subject to an authorization from the government of the exporting country.
Check with the government agency for authorization.

Printed in Japan

071205EN